BASE BUILDING MECHANICAL RENOVATIONS

1144 W LAKE ST
OAK PARK, IL 60301

BASE BUILDING MECHANICAL, PLUMBING, AND ELECTRICAL ALTERATIONS TO EXISTING GROUND FLOOR & BASEMENT SPACES WITHIN AN EXISTING MIXED-USE FIVE-STORY BUILDING
TYPE I-B CONSTRUCTION - FULLY SPRINKLERED
GROUP M/A-2/B OCCUPANCY

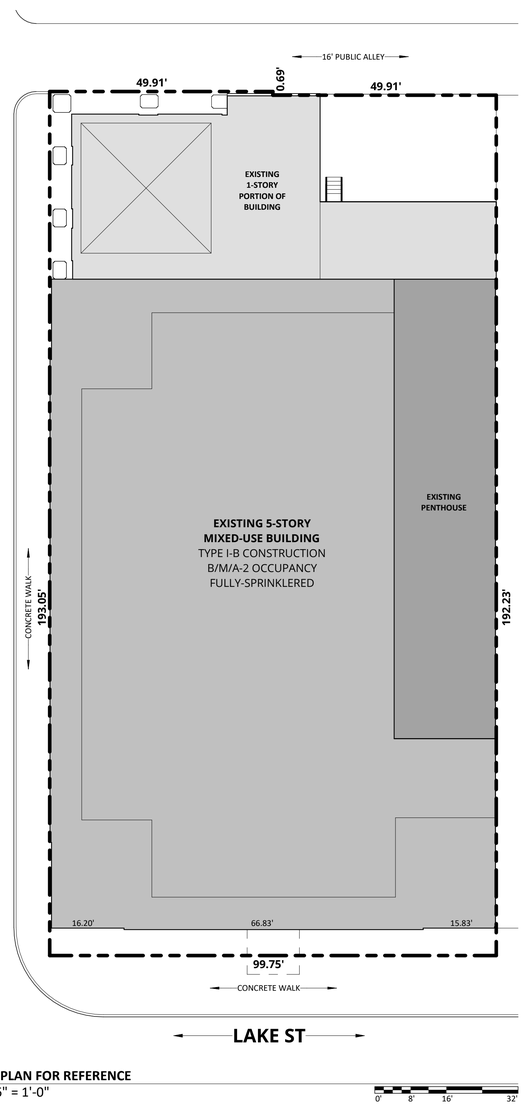

1 SITE PLAN FOR REFERENCE
1/16" = 1'-0"

0' 8' 16' 32'

TM 09/30/2025

FIRE ALARM NOTES

1. CONTRACTOR SHALL DESIGN AND BUILD ALTERATIONS FOR A COMPLETE, OPERATING MANUAL AND AUTOMATIC FIRE ALARM SYSTEM FOR THE AREA OF WORK AS REQUIRED. FIRE ALARM SHALL BE INSTALLED IN ACCORDANCE WITH NFPA 72 AND LOCAL ORDINANCES.
2. WORK SHALL BE PERFORMED IN A NEAT WORKMANLIKE MANNER.
3. PROCURE ALL REQUIRED PERMITS AND INSPECTIONS. SUBMIT INSTALLATION DRAWINGS FOR VILLAGE AND FIRE DEPARTMENT APPROVAL. DRAWINGS SHALL BEAR THE SIGNATURE AND SEAL OF AN ILLINOIS REGISTERED PROFESSIONAL ENGINEER.
4. CONFER WITH THE OTHER TRADES IN THE COORDINATION OF THIS WORK FOR CLEARANCES, CHASES, RECESSES AND OPENINGS REQUIRED.
5. GUARANTEE THE WORK TO BE FREE FROM DEFECTIVE WORKMANSHIP AND MATERIALS FOR A PERIOD OF ONE YEAR FROM DATE OF FINAL CERTIFICATE. ANY REPAIRS OR REPLACEMENT DURING THIS PERIOD SHALL BE MADE WITHOUT COST TO THE OWNER.
6. FIRE PROTECTION CONTRACTOR TO PROVIDE 1/4"=1'-0" SCALE AS-BUILT DRAWINGS TO OWNER.
7. THE PRIMARY AND SECONDARY POWER SUPPLY FOR THE FIRE ALARM SHALL BE PROVIDED IN ACCORDANCE WITH NFPA 72.

SPRINKLER NOTES

1. CONTRACTOR SHALL DESIGN AND BUILD ALTERATIONS FOR A COMPLETE, OPERATING AUTOMATIC WET SPRINKLER SYSTEM FOR THE AREA OF WORK AS REQUIRED TO THE STANDARD OF NFPA 13. PROVIDE NEW MAIN (WHERE REQUIRED), BRANCHES AND SPRINKLER HEADS FOR RENOVATED AREA AND POSITION NEW SPRINKLER HEADS AND SYSTEM COMPONENTS AS REQUIRED BY NFPA, FIRE MARSHAL, AND VILLAGE REQUIREMENTS. REMOVE EXISTING PIPING AND HEADS WHERE NOT USED AND CAP PIPING. EXISTING SPRINKLERS SHALL BE REUSED WHEREVER POSSIBLE.
2. WORK SHALL BE PERFORMED IN A NEAT WORKMANLIKE MANNER.
3. PROCURE ALL REQUIRED PERMITS AND INSPECTIONS. SUBMIT INSTALLATION DRAWINGS FOR VILLAGE AND FIRE DEPARTMENT APPROVAL. DRAWINGS SHALL BEAR THE SIGNATURE AND SEAL OF AN ILLINOIS REGISTERED PROFESSIONAL ENGINEER.
4. THIS TRADE SHALL DO ITS OWN CUTTING AND PATCHING.
5. CONFER WITH THE OTHER TRADES IN THE COORDINATION OF THIS WORK FOR CLEARANCES, CHASES, RECESSES AND OPENINGS REQUIRED.
6. GUARANTEE THE WORK TO BE FREE FROM DEFECTIVE WORKMANSHIP AND MATERIALS FOR A PERIOD OF ONE YEAR FROM DATE OF FINAL CERTIFICATE. ANY REPAIRS OR REPLACEMENT DURING THIS PERIOD SHALL BE MADE WITHOUT COST TO THE OWNER.
7. ENTIRE INSTALLATION SHALL BE MADE IN ACCORD WITH REQUIREMENTS OF APPLICABLE NFPA STANDARDS AND THE LOCAL FIRE PREVENTION DEPARTMENT.
8. FIRE SPRINKLER PIPING SHALL BE SCHEDULE 40 BLACK STEEL PIPE, GROOVED OR WELDED.
9. ALL PIPING SHALL BE SUPPORTED AND BRACED IN ACCORDANCE WITH NFPA-13.
10. INSTALL PIPING & EQUIPMENT AS REQUIRED BY NFPA-13.
11. PRESSURE TEST & FLUSH PIPING ACCORDING TO PROCEDURES SET FORTH NFPA. REPAIR ANY DAMAGE TO ANY OTHER WORK CAUSED BY INSTALLATION OR BY LEAKS IN THE FIRE PROTECTION.
12. THE ENTIRE PROJECT AREA SHALL BE PROTECTED WITH AN APPROVED, WET HYDRAULIC CALCULATED AUTOMATIC SPRINKLER SYSTEM. COORDINATE WITH FLOOR CEILING CONSTRUCTION TRADES TO PROVIDE ACCESS TO ALL VALVES AND OTHER EQUIPMENT.
13. PIPE AND FITTINGS SHALL BE IN ACCORDANCE WITH NFPA #13. THE CORROSION RESISTANCE RATION (CRR) OF PIPING SHALL NOT BE LESS THAN 1.0.
14. FINAL SPRINKLER SYSTEM TEST SHALL BE MADE IN ACCORDANCE WITH NFPA #13.
15. FIRE PROTECTION CONTRACTOR TO PROVIDE 1/4"=1'-0" SCALE AS-BUILT DRAWINGS TO OWNER.
16. WORK ON THE FIRE SPRINKLER SYSTEM REQUIRES A SEPARATE PERMIT APPLICATION AND SHOP DRAWINGS SHALL BE SUBMITTED FOR REVIEW AND APPROVAL PRIOR TO ANY INSTALLATION.

TM 09/19/2025

NOTE: WHEN "AS BUILT DRAWINGS", "REDLINE DRAWINGS", OR "RECORD DRAWINGS" ARE DEVELOPED DURING THIS PROJECT, A COPY OF SUCH SHALL ALSO BE SUBMITTED TO THE VILLAGE OF OAK PARK FOR THE PERMANENT BUILDING PERMIT FILE.

PROJECT SCOPE

THE SCOPE FOR THIS PROJECT INCLUDES LANDLORD WORK THAT INVOLVES RENOVATIONS TO BASE BUILDING MECHANICAL, ELECTRICAL AND PLUMBING SYSTEMS. NEW STRUCTURAL WORK WILL ALSO BE PROVIDED TO ALLOW FOR NEW MECHANICAL OPENINGS IN THE BUILDING STRUCTURE AND TO SUPPORT NEW MECHANICAL EQUIPMENT.

ALL OF THE WORK INCLUDED IN THIS SCOPE WILL BE CONDUCTED IN A SINGLE PHASE, HOWEVER THE TENANT BUILD-OUT OF THE SPACE WILL BE PERMITTED SEPARATELY BY OTHERS.

AREA OF WORK

BASEMENT:	20,110 SF	EXISTING
	3,100 SF	RENOVATED
FIRST FLOOR:	17,050 SF	EXISTING
	4,500 SF	RENOVATED
SECOND FLOOR	14,430 SF	EXISTING
THIRD FLOOR	14,430 SF	EXISTING
FOURTH FLOOR	14,430 SF	EXISTING
FIFTH FLOOR	12,930 SF	EXISTING
PENTHOUSE	2,327 SF	EXISTING
UPPER PENTHOUSE	2,327 SF	EXISTING
TOTAL:	**98,034 SF**	**EXISTING**
	7,600 SF	**RENOVATED**
	LEVEL 2 ALTERATIONS	

ABBREVIATIONS

A/C	AIR CONDITIONING
AFF	ABOVE FINISHED FLOOR
BD	BOARD
BLD	BUILDING
CPT	CARPET
CLG	CEILING
CJ	CONTROL JOINT
CMU	CONCRETE MASONRY UNIT
CONC	CONCRETE
CONT	CONTINUOUS
CO	CLEAN OUT
CW	COLD WATER
CT	CERAMIC TILE
DF	DRINKING FOUNTAIN
DIA	DIAMETER
DIM	DIMENSION
DN	DOWN
DS	DOWNSPOUT
DET	DETAIL
DWG	DRAWING
EA	EACH
EQ	EQUAL
EX OR EXIST	EXISTING
EXT	EXTERIOR
FEC	FIRE EXTINGUISHER CABINET
FHC	FIRE HOSE CABINET
FLR	FLOOR
FD	FLOOR DRAIN
GALV	GALVANIZED
GA	GAUGE
GB	GYPSUM BOARD
HDWR	HARDWARE
H OR HT	HEIGHT
HM	HOLLOW METAL
HW	HOT WATER
MFR	MANUFACTURER
MO	MASONRY OPENING
MTL	METAL
NIC	NOT IN CONTRACT
NTS	NOT TO SCALE
OC	ON CENTER
PT	PAINT
PLAM	PLASTIC LAMINATE
PL	PLATE
R OR RAD	RADIUS
RO	ROUGH OPENING
SHT	SHEET
SIM	SIMILAR
STD	STANDARD
T & G	TONGUE AND GROOVE
T/	TOP
TRANS	TRANSPARENT
TYP	TYPICAL
UNO OR UON	UNLESS NOTED OTHERWISE
VIF	VERIFY IN FIELD
W	WIDTH
WWF	WELDED WIRE FABRIC

SYMBOLS

ROOM NAME 101	ROOM REFERENCE
1 A8.6 SIM	SECTION REFERENCE
1 A8.6 SIM	EXTERIOR ELEVATION
1 4 A-7.1 2 3	INTERIOR ELEVATION
1 A-0	DETAIL / ENLARGED PLAN
Name Elevation	ELEVATION MARK
1 View Name 1/8" = 1'-0"	VIEW TITLE AND NUMBER
1	REVISION CLOUD
X'-X"	DIMENSION
℄	CENTERLINE
#.# #.#	COLUMN GRID LINE

LOCATION MAP

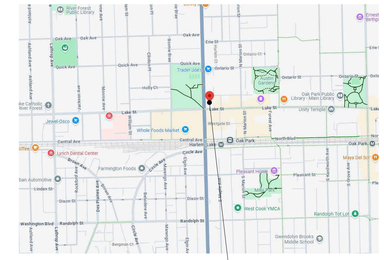

SITE LOCATION

DRAWING INDEX

SHEET NO.	SHEET TITLE	ISSUED FOR PERMIT	PERMIT REVISION 1	PERMIT REVISION 2		
G.0	COVER SHEET	•	•	•		
A.1	ARCHITECTURAL PLANS		•			
S.000	GENERAL NOTES & TYPICAL DETAILS	•	•			
S.100	FIRST FLOOR FRAMING PLAN	•	•			
S.101	SECOND FLOOR AND LOW ROOF FRAMING PLAN	•	•			
S.200	SECTIONS AND DETAILS	•	•			
E0.1	ELECTRICAL DATA SHEET	•	•			
E0.2	ELECTRICAL DATA SHEET	•	•			
E0.3	ELECTRICAL SPECIFICATIONS	•	•			
E0.4	ELECTRICAL SPECIFICATIONS	•	•			
E0.5	ELECTRICAL SPECIFICATIONS	•	•			
E0.6	ELECTRICAL SPECIFICATIONS	•	•			
E1.1	ELECTRICAL BASEMENT FLOOR DEMO PLAN	•	•			
E1.2	ELECTRICAL GROUND FLOOR DEMO PLAN	•	•			
E1.3	ELECTRICAL LOW ROOF DEMO PLAN	•	•			
E2.1	ELECTRICAL BASEMENT LIGHTING PLAN	•	•			
E2.2	ELECTRICAL GROUND FLOOR LIGHTING PLAN	•	•			
E3.1	ELECTRICAL BASEMENT FLOOR POWER PLAN	•	•			
E3.2	ELECTRICAL GROUND FLOOR POWER PLAN	•	•			
E3.3	ELECTRICAL LOW ROOF POWER PLAN	•	•			
E4.1	ELECTRICAL DETAILS	•	•			
E5.1	ELECTRICAL RISER DIAGRAMS	•	•			
E6.1	ELECTRICAL SCHEDULES	•	•			
E6.2	ELECTRICAL SCHEDULES	•	•			
E6.3	ELECTRICAL SCHEDULES	•	•			
E7.1	ELECTRICAL COMCHECK	•	•			
M0.1	MECHANICAL DATA SHEET	•	•			
M0.2	MECHANICAL SPECIFICATIONS	•	•			
M0.3	MECHANICAL SPECIFICATIONS	•	•			
M0.4	MECHANICAL SPECIFICATIONS	•	•			
M1.1	BASEMENT FLOOR MECHANICAL DEMO PLAN	•	•			
M1.2	GROUND FLOOR MECHANICAL DEMO PLAN	•	•			
M1.3	LOW ROOF MECHANICAL DEMO PLAN	•	•			
M2.1	BASEMENT FLOOR MECHANICAL PLAN	•	•			
M2.2	GROUND FLOOR MECHANICAL PLAN	•	•			
M2.3	LOW ROOF MECHANICAL PLAN	•	•			
M3.1	MECHANICAL DETAILS	•	•			
M3.2	MECHANICAL DETAILS	•	•			
M3.3	MECHANICAL DETAILS	•	•			
M4.1	MECHANICAL SCHEDULES	•	•			
M4.2	MECHANICAL SCHEDULES	•	•			
M4.3	MECHANICAL SCHEDULES	•	•			
M4.4	MECHANICAL SCHEDULES	•	•			
M5.1	MECHANICAL COMCHECK	•	•			
M5.2	MECHANICAL COMCHECK	•	•			
P0.1	PLUMBING DATA SHEET	•	•			
P0.2	PLUMBING SPECIFICATIONS	•	•			
P1.1	BASEMENT FLOOR PLUMBING DEMOLITION PLAN	•	•			
P1.2	GROUND FLOOR PLUMBING DEMOLITION PLAN	•	•			
P1.3	GROUND FLOOR GAS PIPING DEMO PLAN	•	•			
P2.1	GROUND FLOOR PLUMBING PLANS & GAS RISER DIAGRAM	•	•			
P3.1	PLUMBING DETAILS	•	•			

PROJECT DIRECTORY

OWNER
1144 LAKE STREET, LLC
415 N LASALLE ST
CHICAGO, IL 60654

ARCHITECT
THOMAS MONTGOMERY ARCHITECT
1701 W 19TH ST
CHICAGO, IL 60608

CONTACT: THOMAS MONTGOMERY
(773) 999-9842
tom@tcmontgomery.com

STRUCTURAL ENGINEER
KIBLER-AE

CONTACT: (773) 344-9181
info@kibler-ae.com

MEP/FP ENGINEER
ALLEN + SHARIFF
625 W ADAMS ST 19TH FL
CHICAGO IL 606061

CONTACT: (312) 320-3668

LICENSED ARCHITECT OF RECORD STATEMENT

I HEREBY CERTIFY THAT THESE PLANS HAVE BEEN PREPARED UNDER MY DIRECTION, AND TO THE BEST OF MY KNOWLEDGE AND BELIEFS CONFORM TO THE VILLAGE OF OAK PARK BUILDING CODES AND ORDINANCES.

SIGNED:

ILLINOIS LICENSE NUMBER: 001.022640

DATE: 09/30/2025

LICENSED ARCHITECT THOMAS CLINTON MONTGOMERY 001.022640 STATE OF ILLINOIS

AFFIX PROFESSIONAL SEAL HERE

THE DRAWINGS COMPLY WITH THE FOLLOWING CODES:

- **OAK PARK ZONING ORDINANCE**
- **2021 INTERNATIONAL BUILDING CODE W/AMENDMENTS**
- **2021 INTERNATIONAL EXISTING BUILDING CODE (IEBC**
- **2020 NATIONAL ELECTRICAL CODE (NEC) W/AMENDMENTS**
- **2021 INTERNATIONAL FIRE CODE (IFC) W/AMENDMENTS**
- **2021 ILLINOIS ENERGY CONSERVATION CODE (IECC)**
- **2021 INTERNATIONAL MECHANICAL CODE (IMC) W/ AMENDMENTS**
- **2021 INTERNATIONAL FUEL GAS CODE (IFGC)**
- **2018 ILLINOIS ACCESSIBILITY CODE (IAC)**
- **2017 ICC A117.1**
- **2014 ILLINOIS PLUMBING CODE (IPC)**

VILLAGE OF OAK PARK
CONSTRUCTION DOCUMENT(S)
REVIEWED FOR COMPLIANCE
KEEP A PRINTED APPROVED COPY OF THE PLANS ON SITE AT ALL TIMES FOR CONTRACTORS AND INSPECTORS

LICENSED ARCHITECT THOMAS CLINTON MONTGOMERY 001.022640 STATE OF ILLINOIS
09/30/2025

ILLINOIS LICENSE NO: 001.022640
EXPIRATION: 11/30/2026

1144 Lake Street, LLC

BASE BUILDING MECHANICAL RENOVATIONS

1144 W LAKE ST
OAK PARK, IL 60301

NO.	DESCRIPTION	DATE
2	PERMIT REVISION 2	09/30/2025
1	PERMIT REVISION 1	09/19/2025
1	ISSUED FOR PERMIT	08/25/2025

THOMAS MONTGOMERY
ARCHITECT
www.tcmontgomery.com

1701 W 19TH ST
CHICAGO IL 60608
773.999.9842

tom@tcmontgomery.com

JOB NO.: 25.068

COPYRIGHT **2025**: THOMAS MONTGOMERY ARCHITECT, EXPRESSLY RESERVES ITS COMMON LAW COPYRIGHT AND OTHER PROPERTY RIGHTS IN THESE PLANS. THESE PLANS ARE NOT TO BE REPRODUCED, CHANGED OR COPIED IN ANY FORM OR MANNER WHATSOEVER, NOR ARE THEY TO BE ASSIGNED TO ANY THIRD PARTY, WITHOUT FIRST OBTAINING THE EXPRESSED WRITTEN PERMISSION AND CONSENT OF THOMAS MONTGOMERY.

THESE DRAWINGS MAY HAVE BEEN REPRODUCED AT A SIZE DIFFERENTLY THAN ORIGINALLY DRAWN. OWNER AND ARCHITECT ASSUME NO RESPONSIBILITY FOR USE OF INCORRECT SCALE.

SCALE: As indicated

TITLE: **COVER SHEET**

SHEET: **G.0**

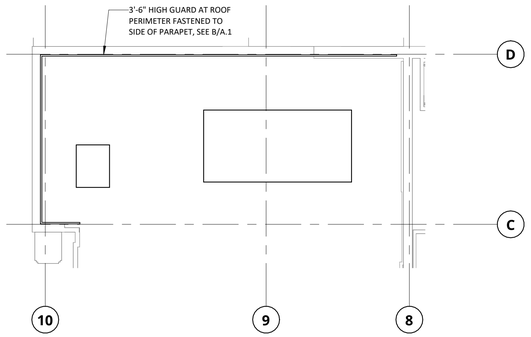

2 **PARTIAL LOW ROOF PLAN**
1/8" = 1'-0"

NOTE: GUARDS SHALL BE DESIGNED TO RESIST A LINEAR LOAD OF 50 PLF AND A CONCENTRATED LOAD OF 200 POUNDS IN ACCORDANCE WITH SECTION 4.5.1.1 OF ASCE 7. INTERMEDIATE RAILS SHALL BE DESIGNED TO RESIST A CONCENTRATED LOAD OF 50 POUNDS IN ACCORDANCE WITH SECTION 4.5.1.1 OF ASCE 7.

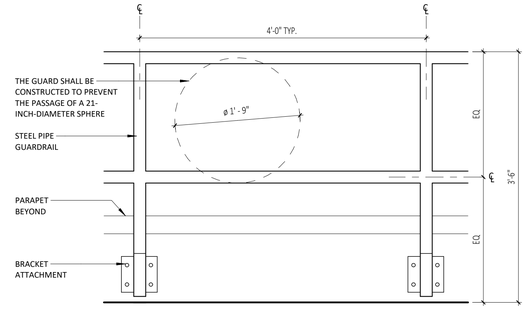

B **TYPICAL GUARD DETAIL**
1" = 1'-0"

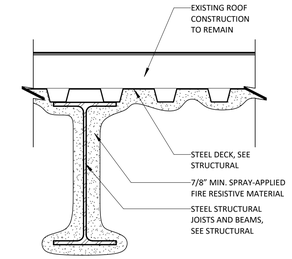

UL# P710
RESTRAINED OR UNRESTRAINED ASSEMBLY

A **TYPE A - 1-HR RATED ROOF**
1 1/2" = 1'-0"

1 **FIRST FLOOR PLAN -**
1/8" = 1'-0"

1 TM 09/19/2025

FLOOR PLAN LEGEND

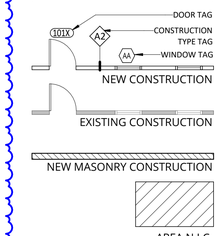

SHEET NOTES

1. DO NOT SCALE DRAWINGS, WRITTEN DIMENSIONS GOVERN.
2. IN CASE OF ANY DISCREPANCY WITHIN THE DRAWINGS, OR ANY DISCREPANCY BETWEEN THE DRAWINGS AND SITE CONDITIONS, NOTIFY ARCHITECT.
3. INDICATED DIMENSIONS ARE TO THE FINISHED FACE OF MATERIALS, U.O.N.
4. ALL DIMENSIONS MARKED "CLEAR", "CLR", OR "HOLD" SHALL BE MAINTAINED AND SHALL ALLOW FOR THICKNESS OF ALL WALL FINISHES, AND SHALL NOT VARY MORE THAN ±1/8" WITHOUT WRITTEN INSTRUCTION FROM ARCHITECT.
5. ALL WORK SHALL BE ERECTED AND INSTALLED PLUMB, LEVEL, SQUARE AND TRUE, AND IN PROPER ALIGNMENT. "ALIGN" MEANS TO ACCURATELY LOCATE FINISHED FACES IN THE SAME PLANE.
6. ANY TYPE OF CONSTRUCTION TESTING, WHETHER STRUCTURAL/SPECIAL INSPECTIONS, HVAC, PLUMBING, FUEL GAS TESTING, OR ANY TESTING NOT MENTIONED, A COPY OF SUCH TESTING SHALL BE PROVIDED TO THE VILLAGE OF OAK PARK FOR THE PERMANENT BUILDING PERMIT FILE.

SAFEGUARDS DURING CONSTRUCTION

1. EACH CONTRACTOR SHALL OBSERVE ALL LOCAL, STATE, AND FEDERAL RULES AND REGULATIONS REGARDING SAFETY AND SHALL PROVIDE ALL NECESSARY EQUIPMENT, SCAFFOLDING, PLANKING, RAILING, SHEETING, ETC. IN ORDER TO SAFEGUARD AND PROTECT THE HEALTH, AND WELL BEING OF ALL THE WORKERS EMPLOYED BY THE CONTRACTOR ON THE CONSTRUCTION SITE. EACH CONTRACTOR SHALL EXPLAIN, INSTRUCT, AND DIRECT ALL WORKERS UNDER HIS JURISDICTION TO OBSERVE ALL THE NECESSARY SAFETY, RULES AND REGULATIONS, EACH CONTRACTOR SHALL MAKE DAILY INSPECTIONS TO VERIFY THAT ALL SAFETY RULES ARE BEING OBSERVED.
2. ALL PROCEDURES REGARDING SAFETY ARE THE RESPONSIBILITY OF THE CONTRACTOR. CONTRACTOR SHALL PROCURE AND PAY FOR THE INSURANCE TO INDEMNIFY AND HOLD HARMLESS THE OWNER, AND THEIR AGENTS, EMPLOYEES AND CONSULTANTS FROM AND AGAINST ALL CLAIMS, DAMAGES, LOSS AND EXPENSES, INCLUDING ATTORNEYS FEES, RESULTING FROM INJURIES, DEATH, SICKNESS, DISEASES, OR ANY OTHER PHYSICAL HANDICAP ARISING FROM NON-OBSERVANCE OF THE SAFETY RULES AND REGULATIONS.

VILLAGE OF OAK PARK
CONSTRUCTION DOCUMENT(S)
REVIEWED FOR COMPLIANCE
Date: 09/19/2025
This review is limited to work described on the plans and shall not imply approval of any omission of code or ordinance violations. The permit holder is responsible for the entire project and all work must be in compliance with all applicable codes and ordinances. Approval of this plan does not authorize violations of any code or ordinance. Approval of this plan does not authorize violations of any code or ordinance. Approval of this plan does not authorize violations of any code or ordinance.
KEEP A PRINTED APPROVED COPY OF THE PLANS ON SITE AT ALL TIMES FOR CONTRACTORS AND INSPECTORS
• Signage is required to provide 24 hour emergency contact information
Revisions: 09-19-2025 (1)
Construction hours are 7:00AM through 8:00PM all seven days a week
• Noise, vibration, and dust must be controlled at all times to avoid nuisance complaints
• Trees shall be protected in the parkway, do not block sidewalks or streets
Portable toilets shall be properly maintained a minimum of 10' from the lot line
• Contractor shall provide a dumpster or container for all trash, debris, and waste (NO BURNING)
Request for neighboring properties to not trespass on or damage neighboring properties
Keep the site clean, safe, organized and free from debris
Work shall be performed only on the approved plans and in a workmanlike manner
Any and all changes and/or deviations to the approved plans shall be proposed in writing, to Mylars, for a complete re-review and recognized.

LICENSED ARCHITECT
THOMAS CLINTON MONTGOMERY
001.022640
STATE OF ILLINOIS

09/19/2025

ILLINOIS LICENSE NO: 001.022640
EXPIRATION: 11/30/2026

1144 Lake Street, LLC

BASE BUILDING MECHANICAL RENOVATIONS

1144 W LAKE ST
OAK PARK, IL 60301

NO.	DESCRIPTION	DATE
1	PERMIT REVISION 1	09/19/2025

THOMAS MONTGOMERY
ARCHITECT
www.tcmontgomery.com

1701 W 19TH ST
CHICAGO IL 60608
773.999.9842

tom@tcmontgomery.com

JOB NO.: 25.068

COPYRIGHT **2025**: THOMAS MONTGOMERY ARCHITECT, EXPRESSLY RESERVES ITS COMMON LAW COPYRIGHT AND OTHER PROPERTY RIGHTS IN THESE PLANS. THESE PLANS ARE NOT TO BE REPRODUCED, CHANGED OR COPIED IN ANY FORM OR MANNER WHATSOEVER, NOR ARE THEY TO BE ASSIGNED TO ANY THIRD PARTY, WITHOUT FIRST OBTAINING THE EXPRESSED WRITTEN PERMISSION AND CONSENT OF THOMAS MONTGOMERY.

THESE DRAWINGS MAY HAVE BEEN REPRODUCED AT A SIZE DIFFERENTLY THAN ORIGINALLY DRAWN. OWNER AND ARCHITECT ASSUME NO RESPONSIBILITY FOR USE OF INCORRECT SCALE.

SCALE: As indicated

TITLE: **ARCHITECTURAL PLANS**

SHEET: **A.1**

9/25/2025 2:05:33 PM

GENERAL STRUCTURAL NOTES

DESIGN CODES AND STANDARDS

ALLOWABLE STRESSES AND LOADING IN ACCORDANCE INTERNATIONAL BUILDING CODE, 2021.

LIVE LOADS USED IN DESIGN IN LBS. PER SQ. FT. ARE AS FOLLOWS:
ROOF LIVE LOAD 20 PSF

SNOW LOAD (ASCE 7-16)

RISK CATEGORY	II
IMPORTANCE FACTOR	Is = 1.00
GROUND SNOW LOAD	Pg = 25 PSF
FLAT ROOF SNOW LOAD – FLAT ROOF	Pf = 20 PSF
EXPOSURE FACTOR	Ce = 1.0
THERMAL FACTOR	Ct = 1.0
DRIFTING	SEE DIAGRAM THIS SHEET

STRUCTURAL STEEL

STRUCTURAL STEEL SHALL BE DETAILED, FABRICATED AND ERECTED IN ACCORDANCE WITH THE AISC "SPECIFICATION FOR STRUCTURAL STEEL BUILDINGS", 2016 EDITION AND THE AISC "CODE OF STANDARD PRACTICE FOR STEEL BUILDINGS AND BRIDGES", 2016 EDITION.

STEEL SHALL CONFORM TO THE FOLLOWING ASTM SPECIFICATIONS:
STRUCTURAL SHAPES: A992 (FY = 50KSI)
MISCELLANEOUS ANGLES, CHANNELS & BASE PLATES: A36
STRUCTURAL TUBING: A500, GRADE C
STEEL PIPE: ASTM A53, GRADE B.
ANCHOR RODS: F1554, GRADE 36
HEADED SHEAR STUDS: ASTM A108

ALL FIELD CONNECTIONS, EXCEPT WHERE SHOWN TO BE WELDED, SHALL BE BOLTED WITH 3/4"Ø HIGH STRENGTH STEEL BOLTS CONFORMING TO ASTM SPECIFICATION A325 TYPICAL UNO AND AISC SPECIFICATIONS FOR ASSEMBLY OF STRUCTURAL JOINTS USING HIGH STRENGTH STEEL BOLTS.

ALL WELD FILLER MATERIAL TO BE FEXX = 70 KSI.

THE FABRICATOR IS RESPONSIBLE FOR THE DESIGN OF ALL STANDARD AISC CONNECTIONS UNLESS NOTED OTHERWISE. CONNECTIONS SHOWN ON THE STRUCTURAL OR ARCHITECTURAL DRAWINGS ARE SCHEMATIC AND ARE ONLY INTENDED TO SHOW THE RELATIONSHIP OF THE CONNECTED MEMBERS. CONNECTION DETAILS INDICATED IN THE STRUCTURAL DRAWINGS SHALL BE INCORPORATED INTO THE FABRICATORS CONNECTION DESIGN. CONNECTION CALCULATIONS SHALL BE DESIGNED, SIGNED AND SEALED BY A STRUCTURAL ENGINEER LICENSED IN THE STATE OF ILLINOIS AND SUBMITTED TO THE ENGINEER OF RECORD.

FABRICATOR SHALL SELECT STANDARD AISC CONNECTION FOR STEEL BEAMS CAPABLE OF CARRYING EITHER THE REACTION FORCES WHERE INDICATED OR A MINIMUM OF 50% OF THE TOTAL UNIFORM LOAD FOR THE GIVEN BEAM SIZE, SPAN, AND GRADE, AS TABULATED IN THE AISC MAXIMUM TOTAL UNIFORM LOAD TABLE.

WELDER QUALIFICATIONS: ALL WELDERS SHALL HAVE EVIDENCE THAT THEY HAVE PASSED THE AWS STANDARD QUALIFICATION TESTS.

ALL EXPOSED EXTERIOR STEEL TO BE HOT-DIPPED GALVANIZED.

METAL ROOF DECK

METAL ROOF DECK SHALL BE DETAILED, FABRICATED AND INSTALLED IN ACCORDANCE WITH THE 2017 STEEL DECK INSTITUTE SPECIFICATIONS.

STRUCTURAL DIAPHRAGM ACTION SHALL BE PROVIDED BY THE ROOF DECK. THE DECK AND ITS ATTACHMENT TO THE STRUCTURE SHALL RESIST SHEARS OF 375 POUNDS PER FOOT WITH A SAFETY FACTOR OF NOT LESS THAN 2.35 TO 1. ATTACHMENT METHOD AND PATTERN SHALL CONFORM TO THE STEEL DECK INSTITUTE'S DIAPHRAGM DESIGN MANUAL, FOURTH EDITION.

SHORING AND BRACING

INDIVIDUAL STRUCTURAL COMPONENTS ARE DESIGNED TO SUPPORT LOADS IN THEIR FINAL POSITION AS PART OF THE TOTAL COMPLETED STRUCTURE. PROVIDE TEMPORARY SHORING, GUYING AND BRACING AS REQUIRED UNTIL ALL CONSTRUCTION AFFECTING LOAD CARRYING MEMBERS AND LATERAL STABILITY IS COMPLETED.

CONTRACTOR SHALL BE SOLELY RESPONSIBLE FOR THE STABILITY OF THE STRUCTURE, ITS PARTS AND JOB SITE SAFETY BY THE USE OF GUYING, BRACING, SHORING, BARRICADES, SAFETY RAILINGS AND DEVICES DURING THE ENTIRE PERIOD OF CONSTRUCTION.

THE CONTRACTOR IS FULLY RESPONSIBLE FOR PROVIDING ALL TEMPORARY SHORING AND BRACING OF EXISTING STRUCTURAL ELEMENTS DURING CONSTRUCTION. ALL SHORING MUST BE ADEQUATE TO SUPPORT ALL STRUCTURAL LOADING DURING MODIFICATION OF THE EXISTING BUILDING AND ERECTION OF THE NEW STRUCTURAL SUPPORT SYSTEM. TEMPORARY SHORING MUST REMAIN IN PLACE UNTIL ALL NEW STRUCTURAL MEMBERS SUPPORTING SHORED ELEMENTS ARE IN PLACE, ALL NEW CONNECTIONS ARE IN PLACE, AND ALL CONCRETE DECK HAS ATTAINED DESIGN STRENGTH.

ALL SHORING, MEANS AND METHODS ARE SOLELY THE RESPONSIBILITY OF THE CONTRACTOR. ALL SHORING SHALL BE DESIGNED, SIGNED AND SEALED BY A STRUCTURAL ENGINEER LICENSED IN THE STATE OF ILLINOIS.

GENERAL NOTES

ALL DIMENSIONS ON STRUCTURAL DRAWINGS TO BE CHECKED AGAINST ARCHITECTURAL, MECHANICAL AND ELECTRICAL DRAWINGS AND EXISTING CONDITIONS BY THE GENERAL CONTRACTOR; ANY DISCREPANCIES ARE TO BE REPORTED TO THE ARCHITECT IMMEDIATELY.

SEE ARCHITECT'S DRAWINGS FOR RELATION OF BUILDING ELEVATIONS TO MUNICIPAL DATUM.

UNLESS OTHERWISE NOTED, ALL DETAILS, SECTIONS AND NOTES ON THE DRAWINGS ARE INTENDED TO BE TYPICAL FOR SIMILAR SITUATIONS ELSEWHERE.

THESE DRAWINGS ARE NOT TO BE REPRODUCED FOR THE PURPOSE OF USING THEM AS SHOP DRAWINGS.

ARCHITECT'S/OWNER'S APPROVAL MUST BE SECURED FOR ALL SUBSTITUTIONS.

THE INFORMATION CONTAINED ON THE STRUCTURAL DRAWINGS IS IN ITSELF INCOMPLETE AND VOID UNLESS USED IN CONJUNCTION WITH ALL THE CONTRACT DRAWINGS, TRADE PRACTICES, OR APPLICABLE STANDARDS, CODES, ETC., INCORPORATED THEREIN BY REFERENCE WHICH THE CONTRACTOR CERTIFIES KNOWLEDGE OF BY SIGNING THE CONTRACT.

STRUCTURAL ENGINEER'S REVIEW OF SHOP DRAWINGS IS ONLY FOR CONFORMANCE WITH THE DESIGN CONCEPT. CONSTRUCTION SHALL NOT BEGIN WITHOUT SAID REVIEW AND ONLY SHOP DRAWINGS STAMPED BY THE ARCHITECT AND STRUCTURAL ENGINEER SHALL BE ALLOWED AT THE JOB SITE.

CONTRACTOR IS TO ASSUME FULL RESPONSIBILITY, UNRELIEVED BY REVIEW OF SHOP DRAWINGS OR PERIODIC OBSERVATION OF CONSTRUCTION, FOR COMPLIANCE WITH THE CONTRACT DOCUMENTS, FOR DIMENSIONS TO BE CONFIRMED AND CORRELATED ON THE JOB SITE AND BETWEEN INDIVIDUAL DRAWINGS OR SETS OF DRAWINGS FOR FABRICATION PROCESSES AND CONSTRUCTION TECHNIQUES (INCLUDING EXCAVATION, SHORING, SCAFFOLDING, BRACING, ERECTION, FORMWORK, ETC.), FOR COORDINATION OF THE VARIOUS TRADES, AND FOR SAFE CONDITIONS ON THE JOB SITE. VARIATIONS IN FIELD CONDITIONS RELATIVE TO THE CONTRACT DOCUMENTS SHALL BE REPORTED TO THE ARCHITECT/OWNER. WORK SHALL NOT PROGRESS UNTIL WRITTEN PERMISSION FROM THE ARCHITECT/OWNER IS OBTAINED.

STATEMENT OF SPECIAL INSPECTIONS:

SPECIAL INSPECTIONS AND STRUCTURAL TESTING SHALL BE PROVIDED BY AN INDEPENDENT AGENCY EMPLOYED BY THE OWNER IN ACCORDANCE WITH THE FOLLOWING SCHEDULE, MATERIALS, AND THE INTERNATIONAL BUILDING CODE, 2021

STRUCTURAL STEEL: IN ACCORDANCE WITH THE QUALITY ASSURANCE INSPECTION REQUIREMENTS OF AISC 360-16

1 SJK
9/19/2025

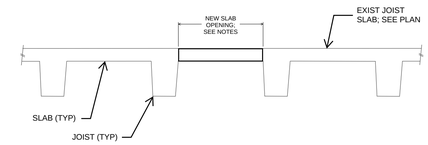

NOTES:
1. SEE PLAN FOR PROPOSED SLAB OPENING LOCATION. VERIFY ALIGNMENT IN FIELD USING PILOT HOLES IN ORDER TO AVOID JOISTS & ADJUST LOCATION AS NECESSARY.
2. TAKE CARE TO NOT DAMAGE EXISTING JOISTS. DURING DEMOLITION, CORE CORNERS OF NEW OPENING. DO NOT OVERCUT.

TYPICAL NEW SLAB OPENING IN EXISTING JOIST SLAB DETAIL

SCALE: NO SCALE

KIBLER-AE PC
Structural Engineering

4938 N. Wolcott Ave.
Chicago, IL 60640

tel 773-344-9181

LICENSED STRUCTURAL ENGINEER
STEPHEN JOHN KIBLER
081-005715
STATE OF ILLINOIS

STRUCTURAL ENGINEER LICENCE No. 081.005715
EXPIRES: 11-30-2026
ILLINOIS DESIGN FIRM LICENCE No. 184.009122-0007
EXPIRES: 4-30-2027

VILLAGE OF OAK PARK
CONSTRUCTION DOCUMENT(S)
REVIEWED FOR COMPLIANCE
KEEP A PRINTED APPROVED COPY OF THE PLANS ON SITE AT ALL TIMES FOR CONTRACTORS AND INSPECTORS

1144 Lake Street, LLC

BASE BUILDING MECHANICAL RENOVATIONS

1144 W LAKE ST
OAK PARK, IL 60301

NO.	DESCRIPTION	DATE
1	PERMIT REVISION 1	09/19/2025
1	ISSUED FOR PERMIT	08/25/2025

JOB NO.: 25.068

SCALE:

GENERAL NOTES & TYPICAL DETAILS

SHEET: **S000**

8/24/2025 4:49:19 PM

LEGEND:

▲ EXISTING MEMBER

(▲J) EXISTING REINFORCED CONCRETE JOIST SLAB

NOTES:
1. COORDINATE OPENING SIZE AND LOCATION WITH MECHANICAL DRAWINGS. SEE TYPICAL DETAILS. TAKE CARE TO NOT DAMAGE EXISTING JOISTS.

2. COORDINATE NEW FRAMING LOCATIONS TO SUPPORT NEW RTU CURB. CUT RE-SUPPORTED JOISTS AT NEW OPENINGS.

3. SEE MECHANICAL DRAWINGS FOR NEW EQUIPMENT SPECIFICATIONS AND LOCATIONS.

4. VERIFY ALL DIMENSIONS IN FIELD PRIOR TO CONSTRUCTION.

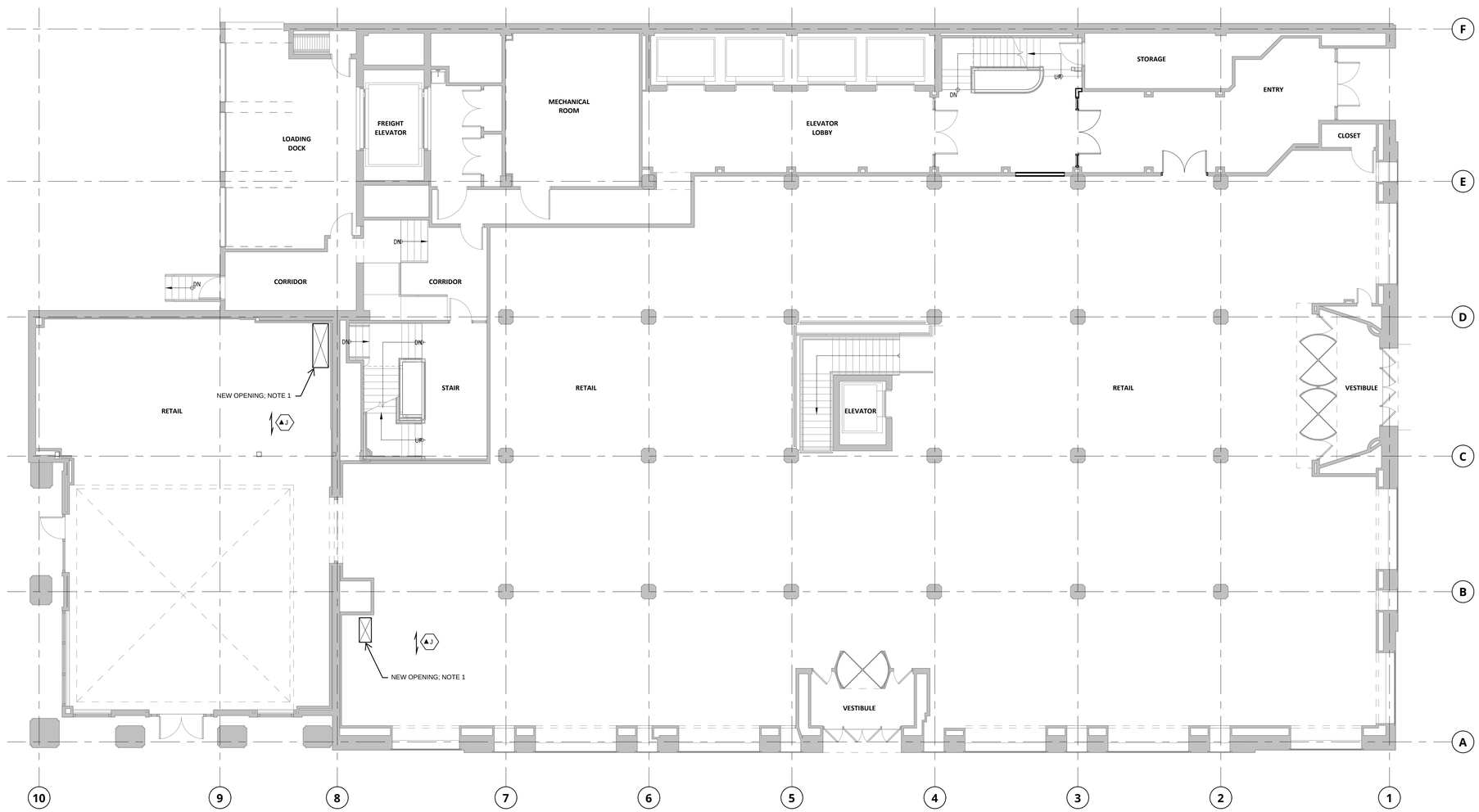

1 FIRST FLOOR FRAMING PLAN
1/8" = 1'-0"

N

0' 4' 8' 16'

KIBLER-AE PC
Structural Engineering

4938 N. Wolcott Ave.
Chicago, IL 60640

tel 773-344-9181

LICENSED STRUCTURAL ENGINEER
STEPHEN JOHN KIBLER
081-005715
STATE OF ILLINOIS

STRUCTURAL ENGINEER LICENCE No. 081.005715
EXPIRES: 11-30-2026
ILLINOIS DESIGN FIRM LICENCE No. 184.009122-0007
EXPIRES: 4-30-2027

VILLAGE OF OAK PARK
CONSTRUCTION DOCUMENT(S)
REVIEWED FOR COMPLIANCE
KEEP A PRINTED APPROVED COPY OF THE PLANS ON SITE AT ALL TIMES FOR CONTRACTORS AND INSPECTORS

1144 Lake Street, LLC

BASE BUILDING MECHANICAL RENOVATIONS

1144 W LAKE ST
OAK PARK, IL 60301

NO.	DESCRIPTION	DATE
1	ISSUED FOR PERMIT	08/25/2025

JOB NO.: 25.068

SCALE:

TITLE: FIRST FLOOR FRAMING PLAN

SHEET: S100

8/24/2025 4:49:19 PM

KIBLER-AE PC
Structural Engineering

4938 N. Wolcott Ave.
Chicago, IL 60640

tel 773-344-9181

LICENSED STRUCTURAL ENGINEER
STEPHEN JOHN KIBLER
081-005715
STATE OF ILLINOIS

STRUCTURAL ENGINEER LICENCE No. 081.005715
EXPIRES: 11-30-2026
ILLINOIS DESIGN FIRM LICENCE No. 184.009122-0007
EXPIRES: 4-30-2027

VILLAGE OF OAK PARK
CONSTRUCTION DOCUMENT(S)
REVIEWED FOR COMPLIANCE
KEEP A PRINTED APPROVED COPY OF THE PLANS ON SITE AT ALL TIMES FOR CONTRACTORS AND INSPECTORS

LEGEND:

- EXISTING MEMBER
- EXISTING REINFORCED CONCRETE JOIST SLAB
- 1-1/2" - 20 GAGE TYPE B METAL ROOF DECK

NOTES:
1. COORDINATE OPENING SIZE AND LOCATION WITH MECHANICAL DRAWINGS. SEE TYPICAL DETAILS. TAKE CARE TO NOT DAMAGE EXISTING JOISTS.

2. COORDINATE NEW FRAMING LOCATIONS TO SUPPORT NEW RTU CURB. CUT RE-SUPPORTED JOISTS AT NEW OPENINGS.

3. SEE MECHANICAL DRAWINGS FOR NEW EQUIPMENT SPECIFICATIONS AND LOCATIONS.

4. VERIFY ALL DIMENSIONS IN FIELD PRIOR TO CONSTRUCTION.

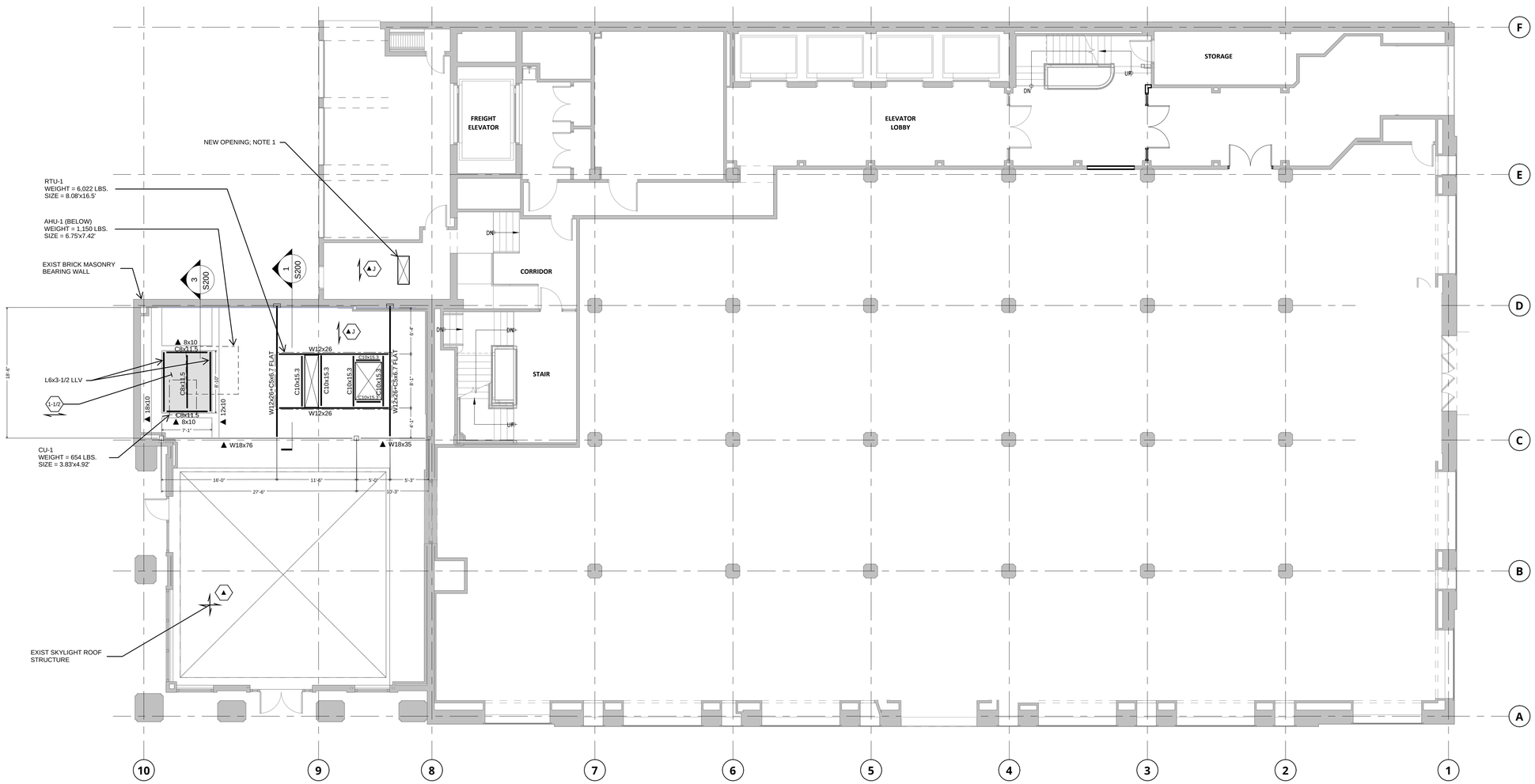

1 SECOND FLOOR & LOW ROOF FRAMING PLAN
1/8" = 1'-0"

1144 Lake Street, LLC

BASE BUILDING MECHANICAL RENOVATIONS

1144 W LAKE ST
OAK PARK, IL 60301

NO.	DESCRIPTION	DATE
1	ISSUED FOR PERMIT	08/25/2025

JOB NO.: 25.068

SCALE:

TITLE: **SECOND FLOOR & LOW ROOF FRAMING PLAN**

SHEET: **S101**

8/24/2025 4:49:19 PM

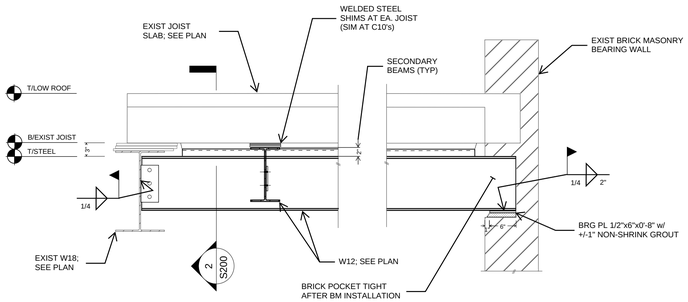

NOTE: ALL BM-TO-BM CONNECTIONS STANDARD
SINGLE-PLATE CONNECTIONS w/ 3/8" PL & 3/4" DIA BOLTS AT
NUMBER (n) SHOWN

SECTION 1
SCALE 3/4" = 1'-0"

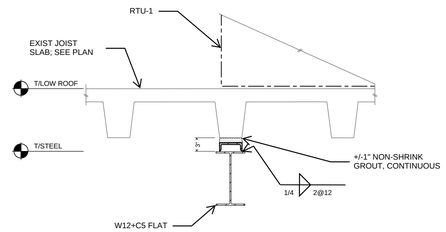

SECTION 2
SCALE 3/4" = 1'-0"

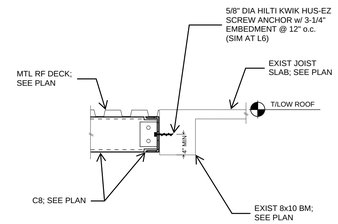

SECTION 3
SCALE 3/4" = 1'-0"

KIBLER-AE PC
Structural Engineering

4938 N. Wolcott Ave.
Chicago, IL 60640

tel 773-344-9181

STRUCTURAL ENGINEER LICENCE No. 081.005715
EXPIRES: 11-30-2026
ILLINOIS DESIGN FIRM LICENCE No. 184.009122-0007
EXPIRES: 4-30-2027

VILLAGE OF OAK PARK
CONSTRUCTION DOCUMENT(S)
REVIEWED FOR COMPLIANCE
KEEP A PRINTED APPROVED COPY OF THE PLANS ON SITE AT ALL TIMES FOR CONTRACTORS AND INSPECTORS

1144 Lake Street, LLC

BASE BUILDING MECHANICAL RENOVATIONS

1144 W LAKE ST
OAK PARK, IL 60301

NO.	DESCRIPTION	DATE
1	ISSUED FOR PERMIT	08/25/2025

JOB NO.: 25.068

SCALE: AS NOTED

TITLE: **SECTIONS AND DETAILS**

SHEET: **S200**

8/24/2025 4:49:19 PM

GENERAL ELECTRICAL NOTES:

GENERAL: UNLESS SPECIFICALLY INDICATED OTHERWISE, ALL WORK SHOWN ON THE ELECTRICAL DRAWINGS IS NEW WORK TO BE PROVIDED UNDER THIS CONTRACT.

DEMOLITION: SEE "ELECTRICAL GENERAL DEMOLITION NOTES FOR ADDITIONAL DEMOLITION REQUIREMENTS.

COORDINATION: COORDINATE AND COOPERATE WITH ALL TRADES ON THE PROJECT.

RECORD DRAWINGS: SECURE AN EXTRA SET OF ELECTRICAL DRAWINGS TO BE KEPT ON SITE AND MARK DAILY, THE DRAWINGS IN RED AS THE PROJECT PROGRESSES IN ORDER TO KEEP AN ACCURATE RECORD OF ALL DEVIATIONS BETWEEN THE WORK SHOWN ON THE DRAWINGS AND THE WORK WHICH IS ACTUALLY INSTALLED. THESE MARKED DRAWINGS SHALL REFLECT ANY AND ALL CHANGES AND REVISIONS TO THE ORIGINAL DESIGN WHICH EXISTS IN THE COMPLETED WORK. DELIVER THE MARKED DRAWINGS TO THE ARCHITECT OR ENGINEER AT PROJECT CLOSE-OUT.

TESTS: TEST ALL WIRING FOR CONTINUITY AND GROUNDS BEFORE CONNECTING ANY FIXTURES OR DEVICES. PERFORM INSULATION RESISTANCE TESTS ON ALL WIRING #8 OR LARGER TO ENSURE THAT ALL PORTIONS ARE FREE FROM SHORT-CIRCUITS AND GROUNDS.

INSPECTIONS: ARRANGE ALL NECESSARY INSPECTIONS. DELIVER ALL REQUIRED INSPECTION CERTIFICATES TO THE OWNER.

GROUNDING: PROVIDE GROUNDING IN ACCORDANCE WITH THE NEC FOR THE ELECTRICAL SYSTEM, INCLUDING EQUIPMENT FRAMES CONDUITS, SWITCHES, CONTROLLERS, WIRE-WAYS, NEUTRAL CONDUCTORS AND OTHER EQUIPMENT. PROVIDE A GROUNDING CONDUCTOR IN ALL CIRCUITS.

LABELS: PROVIDE LABELS FOR ALL PANELBOARDS, CABINETS, SAFETY SWITCHES, MOTOR-DISCONNECT SWITCHES, AND MOTOR CONTROLLERS. LABELS SHALL BE MACHINE ENGRAVED, LAMINATED PLASTIC.

J-BOX LABELING: LABEL ALL JUNCTION BOXES WITH PERMANENT MARKER IDENTIFYING CIRCUIT NUMBER AND PANELBOARD OF CIRCUITS WITHIN.

PANEL DIRECTORY: PROVIDE TYPEWRITTEN PANELBOARD DIRECTORY CARD IN EACH PANELBOARD, INCLUDING EXISTING PANELBOARDS MODIFIED FOR THIS PROJECT, WITH CIRCUIT LOAD INFORMATION AND ROOM NUMBER CLEARLY IDENTIFIED. USE ACTUAL ROOM NUMBERS IN THE BUILDING, NOT THE ROOM NUMBERS SHOWN ON THE CONTRACT DRAWINGS, AS THEY ARE OFTEN DIFFERENT.

MOTOR COORDINATION: MOTORS, MOTOR STARTERS, CONTROLLERS, INTEGRAL DISCONNECT SWITCHES, AND CONTACTORS SHALL BE PROVIDED WITH THEIR RESPECTIVE PIECES OF EQUIPMENT BY THE EQUIPMENT SUPPLIER. COMMUNICATE WITH THE TRADES PROVIDING THE EQUIPMENT, VERIFYING ALL REQUIREMENTS. PROVIDE ALL ELECTRICAL CONNECTIONS REQUIRED THEREIN AND INSTALL MOTOR STARTERS.

MOTOR DISCONNECTS: ALL MOTORS SHALL HAVE DISCONNECTING MEANS.

MOTOR FUSE PROTECTION: WHERE FUSE PROTECTION IS SPECIFICALLY REQUIRED BY THE EQUIPMENT MANUFACTURER, PROVIDE FUSIBLE SWITCHES IN LIEU OF NON-FUSIBLE SWITCHES OR FUSIBLE ENCLOSED CIRCUIT BREAKERS OR OTHER DEVICES INDICATED.

CONNECTION DETAILS: SECURE APPROVED SHOP DRAWINGS SHOWING WIRING DIAGRAMS, ROUGH-IN AND HOOK UP DETAILS FOR EQUIPMENT WHICH MUST BE CONNECTED ELECTRICALLY.

EQUIPMENT DETAILS: MECHANICAL EQUIPMENT WILL BE FURNISHED AND INSTALLED BY THE MECHANICAL CONTRACTOR. THE LOCATIONS SHOWN ON THE ELECTRICAL DRAWINGS ARE APPROXIMATE. COORDINATE WITH THE MECHANICAL CONTRACTOR TO DETERMINE THE EXACT LOCATION OF EACH PIECE OF EQUIPMENT AND DETERMINE THE EXACT ROUGH-IN AND CONNECTION REQUIREMENTS.

STARTER MOUNTING: WHERE AN INDIVIDUALLY MOUNTED SAFETY SWITCH, STARTER OR CIRCUIT BREAKER IS SHOWN ADJACENT TO ITS RESPECTIVE LOAD AND NOT MOUNTED ON A WALL, PROVIDE ALL SUPPORTS, BRACKETS, ANCHORING, ETC. NECESSARY TO PROPERLY SUPPORT THE DEVICE.

LIGHTING ARRANGEMENT: ARRANGE LIGHTING FIXTURES IN ACCORDANCE WITH THE ARCHITECTURAL REFLECTED CEILING PLANS.

LIGHTING COORDINATION: COORDINATE LIGHTING FIXTURES WITH GRILLES, DIFFUSERS, SPRINKLER HEADS, ACCESS PANELS, ETC.

MATERIAL COORDINATION: VERIFY CEILING AND WALL CONSTRUCTION AND MATERIAL PRIOR TO ORDERING LIGHT FIXTURES OR OTHER DEVICES TO ENSURE PROPER FIXTURES OR DEVICES ARE FURNISHED TO MATCH CONSTRUCTION.

MOUNTING HEIGHTS: MOUNTING HEIGHTS INDICATED ARE FROM THE FINISHED FLOOR TO THE CENTERLINE OF THE WIRING DEVICE UNLESS OTHERWISE NOTED. MOUNTING HEIGHTS OF LIGHTING FIXTURES AND FIRE ALARM DEVICES ARE TO THE BOTTOM OF THE FIXTURE OR DEVICE UNLESS OTHERWISE NOTED.

DEVICE LOCATIONS: COORDINATE LOCATIONS OF SWITCHES, RECEPTACLES, AND TELE/DATA OUTLETS WITH OTHER WALL MOUNTED DEVICES SUCH AS THERMOSTATS AND CONTROL STATIONS. DO NOT MOUNT WIRING DEVICES BACK TO BACK.

EWC RECEPTACLES: RECEPTACLES FOR ELECTRIC WATER COOLERS (EWC) SHALL BE INSTALLED OUT OF VIEW AND BEHIND THE EWC ENCLOSURE. VERIFY THE MOUNTING HEIGHT WITH THE EQUIPMENT SUPPLIER PRIOR TO ROUGH-IN.

DEVICE COORDINATION: THOROUGHLY REVIEW AND COORDINATE ALL CASEWORK, DOOR SWINGS, AND CABINET DRAWINGS AND ARCHITECTURAL ELEVATIONS WITH DEVICE LOCATIONS PRIOR TO ROUGH-IN OF OUTLET BOXES.

BARRIERS: WHERE A MULTIPLE GANG BOX HAS CIRCUITS OF DIFFERENT VOLTAGES OR SYSTEMS WHICH ARE REQUIRED TO BE SEPARATED, PROVIDE THE CODE-REQUIRED SEPARATION, USING A FULL HEIGHT AND DEPTH BARRIER PLATE.

FIRE PROOFING: FOR ANY WALL OR FLOOR PENETRATIONS THROUGH FIRE RATED STRUCTURES, PROVIDE FIRE-PROOFING TO SEAL ALL THE PENETRATIONS AFTER THE CONDUIT HAS BEEN INSTALLED. FIRE PROOFING FOR PENETRATIONS SHALL BE UL APPROVED PER THE THE PENETRATION MADE IN ORDER TO MAINTAIN FIRE RATED INTEGRITY OF THE STRUCTURE.

CLEAN UP: ON PROJECT CLOSE-OUT, CLEAN ALL ELECTRICAL DEVICES, LIGHTING FIXTURES, LAMPS AND LENSES, AND REMOVE ALL PAINT SPATTERS FROM DEVICES, FIXTURES, AND PLATES. REPLACE ALL INOPERATIVE LAMPS.

OWNER FURNISHED EQUIPMENT: CONTRACTOR SHALL OBTAIN CUT SHEETS, INSTALLATION DATA, AND ROUGH-IN REQUIREMENTS FOR OWNER FURNISHED, CONTRACTOR INSTALLED EQUIPMENT AND COORDINATE ROUGH-IN AND POWER REQUIREMENTS WITH THE OWNER'S REPRESENTATIVE PRIOR TO STARTING ANY ASSOCIATED WORK.

CONDUIT ROUTING: ALL CONDUIT RUN OVERHEAD SHALL BE RUN AT THE BOTTOM OF THE FLOOR, ROOF STRUCTURE, OR LOWEST CHORD OF JOIST SPACE (AS APPLICABLE) ABOVE IN ORDER TO AVOID CONFLICTS WITH OTHER TRADES.

WIRING DEVICES: ALL RECEPTACLES AND SWITCHES SHALL BE LABELED WITH CLEAR PLASTIC LAMINATED LABEL WITH BLACK TEXT, NOTING PANELBOARD DESIGNATION AND CIRCUIT NUMBER FROM WHICH IT IS FED.

EQUIPMENT DEMONSTRATION: PROVIDE A DEMONSTRATION OF THE OPERATION OF ALL ELECTRICAL COMPONENTS.

CEILING AND MECHANICAL ROOM PLENUM: ALL WIRING THAT WILL NOT BE RUN IN METAL CONDUIT SHALL BE PLENUM RATED.

GENERAL SPECIAL SYSTEM NOTES:

FIRE ALARM SYSTEM

ALL FIRE ALARM NOTIFICATION DEVICES SHALL MEET THE REQUIREMENTS OF THE AMERICANS WITH DISABILITIES ACT (ADA) AND NFPA 72.

ALL WIRING SHALL BE RUN IN CONDUIT (3/4" MINIMUM). MAKE ALL WIRE CONNECTIONS TO DEVICES PER MANUFACTURER'S RECOMMENDATION AND NFPA 72.

MANUFACTURER, IN CONJUNCTION WITH THE CONTRACTOR, SHALL DETERMINE CONDUIT AND WIRING REQUIREMENTS AND DOCUMENT ALL ADDITIONS AND CHANGES ON AS-BUILT RECORD DRAWINGS.

<FOR RENO ONLY> THE EXISTING FIRE ALARM SYSTEM IS MANUFACTURED BY XXXXXXX. ALL MATERIALS AND DEVICES SHALL BE COMPATIBLE WITH THE EXISTING SYSTEM.

ELECTRICAL GENERAL DEMOLITION NOTES:

GENERAL: DEMOLITION DRAWINGS ARE BASED ON EXISTING PLANS AND FIELD INVESTIGATION PRIOR TO DEMOLITION. VISIT THE EXISTING BUILDING PRIOR TO BID IN ORDER TO BECOME FAMILIAR WITH THE EXISTING CONDITIONS AND IN ORDER TO AVOID CONFLICTS.

DASHED ITEMS: ALL ITEMS SHOWN DASHED ON DEMOLITION PLANS ARE EXISTING AND SHALL BE REMOVED COMPLETE INCLUDING BOXES, CONDUIT, WIRE, FASTENERS, AND ASSOCIATED APPURTENANCES UON.

SOLID ITEMS: ALL ITEMS SHOWN SOLID ON DEMOLITION PLANS ARE EXISTING TO REMAIN.

CIRCUITING TO REMAIN: WHERE AFFECTED BY NEW WORK, EXISTING CIRCUITING TO REMAIN SHALL BE REROUTED OR RECONNECTED AS REQUIRED, IN ORDER TO MAINTAIN CONTINUITY OF CIRCUIT.

REUSE OF EXISTING CIRCUITRY: EXISTING CIRCUITS SHALL BE REUSED WHERE CONVENIENT TO SERVE THE NEW LAYOUT. PROVIDE CIRCUIT MODIFICATIONS INDICATED OR REQUIRED TO MAINTAIN CONTINUITY OF EXISTING CIRCUITS THAT REMAIN.

EXISTING CONDUIT: ALL EXISTING CONDUITS AND WIRING THAT WILL NOT BE REUSED SHALL BE REMOVED. EXISTING CONDUIT TO REMAIN CONCEALED IN WALLS SHALL BE ABANDONED. EXISTING CONDUIT TO REMAIN BELOW FLOOR SLAB SHALL BE CUT OFF ONE INCH BELOW ROUGH FLOOR AND GROUTED FLUSH. ALL EXISTING WIRING IN CONDUITS TO BE ABANDONED SHALL BE DISCONNECTED FROM POWER SOURCE AND REMOVED.

REPAIR DAMAGE: EXERCISE CARE IN REMOVAL OF DEMOLITION ITEMS. REPAIR, AT NO ADDITIONAL COST TO OWNER, ANY DAMAGE CAUSED TO EXISTING CONSTRUCTION AND/OR EQUIPMENT TO REMAIN.

ASSOCIATED APPURTENANCES: REMOVE ALL ELECTRICAL APPURTENANCES (DISCONNECTS, STARTERS, WIRING, CONDUIT, ETC.) ASSOCIATED WITH EQUIPMENT TO BE REMOVED BY OTHERS.

KNOCKOUT PLUGS AND COVERS: ALL CONDUIT REMOVED SHALL BE REMOVED IN ITS ENTIRETY, INCLUDING FITTINGS, MOUNTING DEVICES, MOUNTING HARDWARE, ETC. PROVIDE CONDUIT PLUGS AND BLANKS FOR ALL OPENINGS CREATED BY THE REMOVAL OF CONDUIT. PROVIDE BLANK COVER PLATES FOR ALL OPENED OUTLET BOXES CREATED BY THE REMOVAL OF THE EQUIPMENT AND/OR DEVICES.

DEMOLISHED MATERIALS: ALL MATERIALS REMOVED UNDER DEMOLITION, NOT TO BE RELOCATED OR DESIGNATED TO BE TURNED OVER TO THE OWNER, SHALL BECOME PROPERTY OF THE CONTRACTOR AND SHALL BE REMOVED COMPLETELY FROM THE SITE.

SCHEDULE OUTAGES: ALL WORK AND ALL POWER OUTAGES SHALL BE SCHEDULED AT TIMES CONVENIENT TO THE OWNER.

NOTIFICATION: NOTIFY THE OWNER PRIOR TO TURNING OFF ANY CIRCUITS.

EXISTING CIRCUITS: IF DURING THE COURSE OF CONSTRUCTION, IT IS DETERMINED BY THE CONTRACTOR THAT AN EXISTING CIRCUIT BECOMES SPARE, THE CONTRACTOR SHALL UPDATE THE PANELBOARD DIRECTORY TO INDICATE SUCH, EVEN IF IT IS NOT EXPLICITLY MARKED ON THE ELECTRICAL PLANS.

ELECTRICAL ABBREVIATIONS

A	AMPERE
AFF	ABOVE FINISHED FLOOR
AFG	ABOVE FINISHED GRADE
AHU	AIR HANDLING UNIT
AIC	AMPERE INTERRUPTING CURRENT
ATS	AUTOMATIC TRANSFER SWITCH
AV	AUDIO/VISUAL
BFG	BELOW FINISHED GRADE
C	CONDUIT
CB	CIRCUIT BREAKER
CFL	COMPACT FLUORESCENT
CKT	CIRCUIT
EBU	EMERGENCT BATTERY UNIT
EC	EMPTY CONDUIT
EC	ELECTRICAL CONTRACTOR
ECB	ENCLOSED CIRCUIT BREAKER
EF	EXHAUST FAN
EQUIP	EQUIPMENT
ETR	EXISTING TO REMAIN
EX	EXISTING
FLA	FULL LOAD AMPS
FPC	FIRE PROTECTION CONTRACTOR
FPVAV	FAN POWERED VARIABLE AIR VOLUME
GC	GENERAL CONTRACTOR
GFCI	GROUND FAULT CIRCUIT INTERRUPTER
GND	GROUND
HP	HORSE POWER/HEAT PUMP
HVAC	HEATING, VENTILATING, AND AIR CONDITIONING
IG	ISOLATED GROUND
JB	JUNCTION BOX
KVA	KILO-VOLT AMPERE
KW	KILO-WATT
LC	LIGHTING CONTACTOR
LTG	LIGHTING
MCA	MINIMUM CIRCUIT AMPACITY
MC	MECHANICAL CONTRACTOR
MC	METAL CLAD
MCB	MAIN CIRCUIT BREAKER
MFR	MANUFACTURER
MLO	MAIN LUGS ONLY
MOCP	MAXIMUM OVERCURRENT PROTECTION
MTD	MOUNTED
NEC	NATIONAL ELECTRICAL CODE
NF	NON-FUSED
NIC	NOT IN CONTRACT
NL	NIGHT LIGHT
NTS	NOT TO SCALE
OC	ON CENTER
OFCI	OWNER FURNISHED CONTRACTOR INSTALLED
P	POLE
PC	PLUMBING CONTRACTOR
PF	POWER FACTOR
PNL	PANEL
PNLBD	PANELBOARD
Ø	PHASE
PRI	PRIMARY
RECP	RECEPTACLE
RL	RELOCATE EXISTING
RTU	ROOF TOP UNIT
SEC	SECONDARY
TBB	TELEPHONE BACKBOARD
TR	TAMPER RESISTANT
TVSS	TRANSIENT VOLTAGE SURGE SUPPRESSER
TYP	TYPICAL
UON	UNLESS OTHERWISE NOTED
V	VOLTS
VAC	VOLTS ALTERNATING CURRENT
VAV	VARIABLE AIR VOLUME
VDC	VOLTS DIRECT CURRENT
VFD	VARIABLE REQUENCY DRIVE
W	WATTS/WIRE
WG	WIRE GUARD
WP	WEATHERPROOF
XFMR	TRANSFORMER

POWER

	SINGLE RECEPTACLE, 20A, 120V, 18"AFF, UON.
	DUPLEX RECEPTACLE, 20A, 120V, 18"AFF, UON.
	DUPLEX RECEPTACLE, GROUND FAULT INTERRUPTING TYPE, 20A, 120V, 18"AFF, UON.
	DUPLEX RECEPTACLE WITH ADDITIONAL ISOLATED GROUND WIRE, 20A, 120V, 18"AFF, UON.
	DUPLEX RECEPTACLE, 20A, 120V, 40"AFF OR 4" ABOVE COUNTER TOP OR IN CASEWORK (AS APPLICABLE), OR IN CASEWORK, AS APPLICABLE, UON.
	DUPLEX RECEPTACLE, GROUND FAULT INTERRUPTING TYPE, 20A, 120V, 40" AFF TO 4" ABOVE COUNTER TOP OR IN CASEWORK (AS APPLICABLE), OR IN CASEWORK, AS APPLICABLE, UON.
	QUADRUPLEX RECEPTACLES IN COMMON BOX, 20A, 120V, 18"AFF, UON.
WP	DUPLEX RECEPTACLE, GROUND FAULT INTERRUPTING TYPE, 20A, 120V, WITH COOPER MODEL WIU-1D (OR EQUAL) "WHILE-IN-USE" WEATHERPROOF COVER, 18"AFG UON.
EWC	ELECTRIC WATER COOLER CONNECTION, PROVIDE 20A, 120V GROUND FAULT INTERRUPTING TYPE DUPLEX RECEPTACLE. COORDINATE WITH EWC MANUFACTURER'S ROUGH-IN REQUIREMENTS. RECEPTACLE SHALL BE ACCESSIBLE THROUGH REMOVAL OF EWC COVER.
	DUPLEX RECEPTACLE, 20A, 120V, 18"AFF, UON. TOP RECEPTACLE SHALL BE CONNECTED TO LOCAL SWITCH.
	FLOORBOX WITH DUPLEX RECEPTACLE. COORDINATE EXACT LOCATION IN FIELD WITH IN-FLOOR DISTRIBUTION SYSTEM.
	FLOORBOX WITH DUPLEX RECEPTACLE AND TELE/DATA. COORDINATE EXACT LOCATION IN FIELD WITH IN-FLOOR DISTRIBUTION SYSTEM.
	RECESSED FLUSH MOUNTED MULTIPLE SERVICE POKE THROUGH FOR POWER, TELE/DATA, AND AV (WHERE INDICATED). CONFIRM REQUIRED TELE/DATA AND AV DEVICES WITH CLIENT'S VENDOR AND AV DRAWINGS. PROVIDE (1)3/4"C FOR POWER AND (1)1-1/2"C FOR TELE/DATA TO ABOVE ACCESSIBLE CEILING WITHIN THE SAME CONFERENCE. FINISH TO BE VERIFIED BY ARCHITECT.
TV	CABLE TELEVISION OUTLET WITH DUPLEX RECEPTACLE, EQUAL TO ARLINGTON TVBS505 BOX. PROVIDE DUPLEX RECEPTACLE AND 3/4"C WITH PULL STRING STUBBED ABOVE ACCESSIBLE CEILING AND TERMINATED WITH BUSHING.
	FLOOR BOX. REFER TO FLOOR BOX SCHEDULE SHEET EX.X FOR DETAILS.
	SURFACE METAL RACEWAY WITH 20A, 120V SINGLE RECEPTACLES MOUNTED AT 12" ON CENTER. MOUNT 1" ABOVE COUNTERTOP BACKSPLASH.
	SPECIAL RECEPTACLE. NEMA CONFIGURATION AS NOTED. MOUNT 18"AFF UON.
J	JUNCTION BOX - ABOVE CEILINGS OR FLUSH IN WALLS.
MGB	MAIN GROUND BAR
TMGB	TELECOM MAIN GROUND BAR
GB	GROUND BAR
	DISCONNECT SWITCH - SIZE AS INDICATED ON PLANS 30/2/20/3R — NEMA RATING (IF OTHER THAN 1) FUSE SIZE (AMPS), N.F. INDICATES NON-FUSED No. OF POLES SIZE (AMPS)
$M	HORSEPOWER RATED MOTOR SWITCH
	MOTOR CONNECTION.
	COMBINATION MOTOR STARTER AND DISCONNECT SWITCH, MOUNT WITHIN SITE OF MOTOR 5'-0"AFF, MAXIMUM, UON.
FP WP	FLEXIBLE FURNITURE CONNECTION, 6"AFF UON. PROVIDE (1) JUNCTION BOX FOR CONNECTION OF POWER CIRCUITRY (CIRCUITS AS INDICATED ON DRAWINGS) AND PROVIDE (1) JUNCTION BOX WITH 1"C STUBBED ABOVE ACCESSIBLE CEILING FOR TELEPHONE AND DATA CONNECTIONS. PROVIDE POWER AND CONDUIT CONNECTIONS TO FURNITURE. COORDINATE FURNITURE WIRING REQUIREMENTS AND CONNECTIONS WITH FURNITURE EQUIPMENT PROVIDER. PROVIDE LIQUID-TIGHT RACEWAY CONNECTION FROM JUNCTION BOX TO FURNITURE PARTITION.
PP	POWER POLE
CR	DROP CORD/REEL, 20A, 120V, MOUNTED TO CEILING WITH (3) SINGLE RECEPTACLES AT CORD END.
DM	EMON DMON METER. REFER TO POWER PLAN FOR ADDITIONAL INFORMATION.
	UTILITY GRADE METER
VFD	VARIABLE FREQUENCY DRIVE (FURNISHED WITH ASSOCIATED MECHANICAL EQUIPMENT, INSTALLED BY EC), WITH INTEGRAL DISCONNECT SWITCH.
SPD	SURGE PROTECTIVE DEVICE
	ELECTRICAL METER. MOUNT 54" AFF (MINIMUM).
	ELECTRICAL PANELBOARD
	EMERGENCY POWER ELECTRICAL PANELBOARD
	DRY-TYPE TRANSFORMER
	ELECTRICAL CIRCUIT RUN IN CONDUIT AND CIRCUIT HOMERUN TO PANELBOARD (PANEL AND CIRCUIT DESIGNATION AS INDICATED). AS A MINIMUM CONDITION, EACH SINGLE PHASE CIRCUIT SHALL HAVE 1 #12 PHASE CONDUCTOR, 1 #12 NEUTRAL CONDUCTOR, AND 1 #12 GROUNDING CONDUCTOR IN 3/4" CONDUIT. PROVIDE ADDITIONAL PHASE CONDUCTORS AS REQUIRED FOR "MULTIPLE PHASED" ELECTRICAL LOADS. PROVIDE ADDITIONAL "SWITCH LEG" CONDUCTORS TO PROVIDE THE LIGHT FIXTURE CONTROL INDICATED. MULTIPLE SINGLE PHASE CONDUCTORS SHALL BE GROUPED TOGETHER IN A COMMON CONDUIT IN ACCORDANCE WITH THE NEC AND AT THE CONTRACTOR'S DISCRETION. NEUTRAL AND GROUNDING CONDUCTORS SHALL BE SHARED AS ALLOWED BY THE NEC. CONDUIT LARGER THAN 3/4" AND CONDUCTORS LARGER THAN #12 SHALL BE AS INDICATED.

LIGHTING

	LIGHTING FIXTURE.
	LIGHTING FIXTURE ON EMERGENCY CIRCUIT. SUBSCRIPT "NL" WHERE USED, INDICATES NIGHT LIGHT CONNECTED AHEAD OF LIGHTING CONTROLS. TYPICAL ALL FIXTURE TYPES.
	DOWNLIGHT FIXTURE.
	PENDANT LIGHTING FIXTURE.
	WALL WASH LIGHTING FIXTURE. SHADED AREA INDICATES LIGHT THROW DIRECTION.
	DOWNLIGHT FIXTURE ON EMERGENCY CIRCUIT. SUBSCRIPT "NL" WHERE USED, INDICATES NIGHT LIGHT CONNECTED AHEAD OF LIGHTING CONTROLS.
	WALL MOUNTED LIGHTING FIXTURE.
	WALL MOUNTED LIGHTING FIXTURE ON EMERGENCY CIRCUIT. SUBSCRIPT "NL" WHERE USED, INDICATES NIGHT LIGHT CONNECTED AHEAD OF LIGHTING CONTROLS.
	TRACK LIGHTING FIXTURE. INDICATES AN INDIVIDUAL FIXTURE ON THE TRACK.
	AREA SITE LIGHTING FIXTURE.
	EMERGENCY LIGHTING REMOTE UNIT.
	EMERGENCY BATTERY LIGHTING UNIT, CONNECT AHEAD OF LOCAL SWITCH.
	EXIT LIGHTING FIXTURE WITH DIRECTIONAL ARROWS AS INDICATED ON DRAWINGS. CONNECT TO DEDICATED EMERGENCY BRANCH CIRCUIT. SHADED AREA DENOTES LIGHTED FACE.
$$a	DUAL SWITCH (SINGLE POLE OR AS INDICATED BY SUBSCRIPT). 20A, 120/277V, 44"AFF, UON. CONNECT EACH TO SEPARATELY CONTROL INBOARD AND OUTBOARD LAMPS OF EACH FIXTURE INDICATED. CONTROL INBOARD AND OUTBOARD LAMPS CONSISTENTLY. SUBSCRIPT "a" INDICATES ASSOCIATED FIXTURES TO BE CONTROLLED.
$a	SINGLE POLE SWITCH, 20A, 120/277V, 44"AFF UON. SUBSCRIPT "a" INDICATES ASSOCIATED FIXTURES TO BE CONTROLLED.
$4a	FOUR-WAY SWITCH, 20A, 120/277V, 44"AFF UON. SUBSCRIPT "a" INDICATES ASSOCIATED FIXTURES TO BE CONTROLLED.
$Ka	SINGLE POLE KEYED SWITCH, 20A, 120/277V, 44" AFF UON. SUBSCRIPT "a" INDICATES ASSOCIATED FIXTURES TO BE CONTROLLED.
$Pa	SINGLE POLE SWITCH WITH PILOT LIGHT, 20A, 120/277V, 44" AFF UON. SUBSCRIPT "a" INDICATES ASSOCIATED FIXTURES TO BE CONTROLLED.
$3a	THREE-WAY SWITCH, 20A, 120/277V, 44"AFF UON. SUBSCRIPT "a" INDICATES ASSOCIATED FIXTURES TO BE CONTROLLED.
$Da	DIMMER SWITCH, 44" AFF UON. SUBSCRIPT "a", WHERE USED, INDICATES ASSOCIATED FIXTURES TO BE CONTROLLED.
$OC	WALL SWITCH OCCUPANCY SENSOR, 44" AFF UON.
$VS	WALL SWITCH VACANCY SENSOR, 44" AFF UON.
1 $T	WALL SWITCH TIMED, 44" AFF UON.
$LV1a	LOW VOLTAGE SWITCH, 44" AFF UON. SUBSCRIPT "1" INDICATES LOW VOLTAGE SWITCH DESIGNATION. SUBSCRIPT "a" INDICATES LOW VOLTAGE BUTTON DESIGNATION.
O#	OCCUPANCY SENSOR. "#" DENOTES OCCUPANCY SENSOR TYPE. SUBSCRIPT "a", WHERE USED, INDICATES ASSOCIATED FIXTURES TO BE CONTROLLED.
V#	VACANCY SENSOR. "#" DENOTES VACANCY SENSOR TYPE. SUBSCRIPT "a", WHERE USED, INDICATES ASSOCIATED FIXTURES TO BE CONTROLLED.
LC	BUILDING SYSTEM LIGHTING CONTACTOR.
TC	ELECTRONIC TIME CLOCK FOR LIGHTING CONTROL. PROVIDE INTERMATIC ET70000C SERIES OR APPROVED EQUAL.
PC	PHOTOCELL FOR EXTERIOR LIGHTING CONTROL. MOUNT ON ROOF OF BUILDING AND AIM NORTH.
PP	nLIGHT POWER PACK MODEL nPP16.
DP	nLIGHT DIMMING POWER PACK MODEL nPP16D.
EP	nLIGHT EMERGENCY DIMMING POWER PACK MODEL nPP16D-ER.
BR	nLIGHT NETWORK BRIDGE MODEL nBRG8.
G	nLIGHT NETWORK GATEWAY MODEL nGWY2.
G M	nLIGHT NETWORK GATEWAY MODEL NGWY2-GFX FOR MASTER CONTROL.
DS	DAYLIGHT SENSOR.
	LIGHTING FIXTURE KEY
A LP-B-3a	1. LETTER "A" DENOTES FIXTURE TYPE. REFER TO LIGHTING FIXTURE SCHEDULE. 2. SUBSCRIPT "LP-B" INDICATES NAME OF PANELBOARD FROM WHICH FIXTURE IS FED. ASSOCIATED NUMBER "3" INDICATES CIRCUIT NUMBER IN PANELBOARD FROM WHICH FIXTURE IS FED. ASSOCIATED LETTER "a", WHERE USED, INDICATES LIGHTING FIXTURE CONTROL DEVICE DESIGNATION.

LINEWEIGHTS

	NEW
	EXISTING
	REMOVE EXISTING

VILLAGE OF OAK PARK
CONSTRUCTION DOCUMENT(S)
REVIEWED FOR COMPLIANCE
KEEP A PRINTED APPROVED COPY OF THE PLANS ON SITE AT ALL TIMES FOR CONTRACTORS AND INSPECTORS

625 W Adams Street – 19th Floor
Chicago, IL 60661
312.320.3668

LICENSED PROFESSIONAL ENGINEER
ALEXANDER G. RADKOFF
062-073334
OF ILLINOIS

DESIGN FIRM LIC. NO: 184008703-002
DESIGN FIRM LIC. NO. EXP : 04.30.2027
ILLINOIS LICENCE NUMBER: 062.073334
LIC. EXP.: 11.30. 2025

1144 Lake Street, LLC

BASE BUILDING MECHANICAL RENOVATIONS

1144 W LAKE ST
OAK PARK, IL 60301

NO.	DESCRIPTION	DATE
1	PERMIT REVISION 1	09/19/2025
1	ISSUED FOR PERMIT	08/26/2025

JOB NO.: 25.068

SCALE: AS SHOWN

TITLE: ELECTRICAL DATA SHEET

SHEET: E0.1

8/24/2025 4:52:45 PM

	COMMUNICATIONS
▼	TELE/DATA BOX, 4"X4"X2 1/4"D BOX WITH SINGLE GANG PLASTER RING 18"AFF, UON, WITH 3/4"C WITH PULL STRING STUBBED ABOVE ACCESSIBLE CEILING AND TERMINATED WITH PLASTIC BUSHING.
▽	TELE/DATA BOX, 4"X4"X2 1/4"D BOX WITH SINGLE GANG PLASTER RING 40"AFF OR 4" ABOVE COUNTER TOP OR BACKSPLASH (WHICHEVER IS HIGHER) OR IN CASEWORK AS APPLICABLE, UON, WITH 3/4"C WITH PULL STRING STUBBED ABOVE ACCESSIBLE CEILING AND TERMINATED WITH PLASTIC BUSHING.
▼	TELE/DATA BOX, 4"X4"X2 1/4"D BOX WITH SINGLE GANG PLASTER RING 54"AFF, UON, WITH 3/4"C WITH PULL STRING STUBBED ABOVE ACCESSIBLE CEILING AND TERMINATED WITH PLASTIC BUSHING.
▼	DATA-PHONE COMBO FLOOR BOX/POKE THRU
▽	DATA OUTLET FLOOR BOX/POKE THRU
▼	PHONE OUTLET FLOOR BOX/POKE THRU
	TELEPHONE PLYWOOD BACKBOARD 3/4"x8'x4', FIRE RETARDANT. BOTTOM AT 0'-4" AFF.
TV	CABLE TELEVISION OUTLET WITH DUPLEX RECEPTACLE, PROVIDE DUPLEX RECEPTACLE AND ADDITIONAL 4"X4"X2 1/4"D BOX WITH SINGLE GANG PLASTER RING, WITH 3/4"C WITH PULL STRING STUBBED ABOVE ACCESSIBLE CEILING AND TERMINATED WITH BUSHING. MOUNT 18"AFF UON.
SP	PAGING SYSTEM SPEAKER, RECESSED, CEILING.
DF	SYSTEM CLOCK, END WALL MOUNTED, 12 HOUR, 120V. MOUNT 12" BELOW FINISHED CEILING. "DF" DENOTES DOUBLE FACE.
WAP	WIRELESS ACCESS POINT.
ECM	TWO WAY COMMUNICATION SYSTEM MASTER STATION. REFER TO EMERGENCY CALL RISER FOR ADDITIONAL INFORMATION.
ECS	TWO WAY COMMUNICATION SYSTEM CALL STATION. REFER TO EMERGENCY CALL RISER FOR ADDITIONAL INFORMATION.
ECPS	EMERGENCY CALL SYSTEM POWER SUPPLY. PROVIDE BOX PER MANUFACTURER'SRECOMMENDATION. REFER TO EMERGENCY CALL SYSTEM RISER DIAGRAM FOR ADDITIONAL INFORMATION.

	RISER DIAGRAM
M	METER BASE WITH METER (METER PROVIDED BY UTILITY COMPANY).
	CIRCUIT BREAKER.
	FUSE.
	FUSED SWITCH.
	GROUND CONNECTION.
	TRANSFORMER.
A	ALTERNATOR.
G	GENERATOR.
N	NEUTRAL BUS CONNECTION.
G	GROUND BUS CONNECTION.

	GENERAL
1	KEYNOTE.
	LIMIT OF DEMOLITION WORK.
	POINT OF CONNECTION, NEW TO EXISTING.

DETAIL OR SECTION NOTATION:
ENUMERATION: A = DETAIL, 1 = SECTION

X
X.X

ENUMERATION NUMBER OR LETTER

SHEET WHERE DETAIL OR SECTION IS SHOWN

VILLAGE OF OAK PARK
CONSTRUCTION DOCUMENT(S)
REVIEWED FOR COMPLIANCE

KEEP A PRINTED APPROVED COPY OF THE PLANS ON SITE AT ALL TIMES FOR CONTRACTORS AND INSPECTORS

625 W Adams Street – 19th Floor
Chicago, IL 60661
312.320.3668

LICENSED PROFESSIONAL ENGINEER
ALEXANDER G. RADKOFF
062-073334
OF ILLINOIS

DESIGN FIRM LIC. NO: 184008703-002
DESIGN FIRM LIC. NO. EXP : 04.30.2027
ILLINOIS LICENCE NUMBER: 062.073334
LIC. EXP.: 11.30. 2025

1144 Lake Street, LLC

BASE BUILDING MECHANICAL RENOVATIONS

1144 W LAKE ST
OAK PARK, IL 60301

NO.	DESCRIPTION	DATE
2	PERMIT REVISION 1	09/19/2025
1	ISSUED FOR PERMIT	08/26/2025

JOB NO.: 25.068

SCALE: AS SHOWN

TITLE: ELECTRICAL DATA SHEET

SHEET: E0.2

8/24/2025 4:52:45 PM

ELECTRICAL SPECIFICATIONS

ELECTRICAL GENERAL CONDITIONS (260000)

CODES AND STANDARDS - THE LATEST EFFECTIVE PUBLICATIONS OF ALL APPLICABLE STANDARDS, CODES, ETC., AS ADOPTED BY THE AUTHORITY HAVING JURISDICTION, STATE AND LOCAL GOVERNMENTS, AS THEY APPLY, FORM PART OF THESE SPECIFICATIONS AS IF WERE WRITTEN FULLY HEREIN AND CONSTITUTE MINIMUM REQUIREMENTS. THE FOLLOWING WILL BE REFERRED TO THROUGHOUT IN ABBREVIATED FORMS.

2021 INTERNATIONAL BUILDING CODE (IBC) WITH OAK PARK LOCAL AMENDMENTS (EFFECTIVE 01-01-2025)
2021 INTERNATIONAL EXISTING BUILDING CODE (IEBC) WITH OAK PARK LOCAL AMENDMENTS (EFFECTIVE 01-01-2025
2021 INTERNATIONAL MECHANICAL CODE (IMC) WITH OAK PARK LOCAL AMENDMENTS (EFFECTIVE 01-01-2025)
2014 STATE OF ILLINOIS PLUMBING CODE WITH OAK PARK LOCAL AMENDMENTS (EFFECTIVE 03-18-2025)
2021 INTERNATIONAL FUEL GAS CODE (IGC) WITH OAK PARK LOCAL AMENDMENTS (EFFECTIVE 01-01-2025)
2021 INTERNATIONAL ENERGY CONSERVATION CODE (IECC) (EFFECTIVE 01-01-2025) WITH STATE OF ILLINOIS AMENDMENTS
2020 NATIONAL ELECTRIC CODE (NEC) WITH OAK PARK LOCAL AMENDMENTS (EFFECTIVE 01-01-2025) 1
INSTITUTE OF ELECTRICAL AND ELECTRONIC ENGINEERS (IEEE).
THE AMERICANS WITH DISABILITIES ACT (ADA).
APPLICABLE STANDARDS OF UNDERWRITER'S LABORATORIES, INC. (UL).
APPLICABLE STANDARDS OF NATIONAL FIRE PROTECTION ASSOCIATION (NFPA).
UNDERWRITERS LABORATORY (UL), IRI, FM
AMERICAN NATIONAL STANDARDS INSTITUTE (ANSI) APPLICABLE STATE AND LOCAL CODES.
APPLICABLE STATE AND LOCAL CODES.
INTERNATIONAL ELECTRICAL TESTING ASSOCIATION (NETA).

A. SCOPE OF WORK - PROVIDE ALL LABOR, MATERIALS, EQUIPMENT, APPURTENANCES AND SERVICES TO PROVIDE A COMPLETE ELECTRICAL INSTALLATION AS SHOWN ON THE DRAWINGS AND AS DESCRIBED IN THESE SPECIFICATIONS.
B. SITE VISIT - THE CONTRACTOR SHALL VISIT THE SITE PRIOR TO SUBMITTING HIS BID TO BECOME FAMILIAR WITH THE EXISTING CONDITIONS AND DETERMINE THE EXTENT OF WORK. LACK OF KNOWLEDGE OF EXISTING CONDITIONS WILL NOT BE CONSIDERED A BASIS FOR CHANGE ORDERS. PRIOR TO ORDERING EQUIPMENT, CONTRACTOR SHALL VERIFY THAT EQUIPMENT TO BE PROVIDED UNDER THIS CONTRACT IS ACCEPTABLE AND CAN FIT INTO BUILDING AND ROOM. EXPENSE INCURRED BY THE CONTRACTOR, WHICH IN THE ENGINEER'S OPINION COULD HAVE BEEN AVOIDED BY THIS STEP, SHALL NOT BE A BASIS FOR CHANGE ORDERS.
C. DRAWINGS AND SPECIFICATIONS - THE DRAWINGS ARE DIAGRAMMATIC AND INDICATE THE GENERAL EXTENT, CHARACTER AND ARRANGEMENT OF EQUIPMENT, FIXTURES AND CONDUIT AND WIRING SYSTEMS. IT IS THE INTENTION OF THESE SPECIFICATIONS AND DRAWINGS TO FULLY COVER ALL WORK AND MATERIALS FOR A COMPLETE, FIRST-CLASS ELECTRICAL INSTALLATION, AND ANY DEVICES SUCH AS PULL BOXES, STARTERS, AND DISCONNECT SWITCHES, USUALLY EMPLOYED IN THIS CLASS OF WORK THOUGH NOT SPECIFICALLY MENTIONED OR SHOWN ON THE DRAWINGS OR IN THIS SPECIFICATION, BUT WHICH MAY BE NECESSARY FOR THE SATISFACTORY COMPLETION OF THE WORK, SHALL BE FURNISHED AND INSTALLED BY THE CONTRACTOR AS A PART OF HIS TOTAL WORK UNDER THIS DIVISION. CONSULT THE SPECIFICATIONS AND DRAWINGS OF ALL OTHER TRADES AND PERFORM ALL ELECTRICAL WORK REQUIRED THEREIN. COOPERATE WITH ALL OTHER CONTRACTORS OR SUBCONTRACTORS TO FURNISH COMPLETE WORKABLE SYSTEMS.
D. ALL ELECTRICAL COMPONENTS, DEVICES, AND ACCESSORIES SHALL BE LISTED AND LABELED AS DEFINED IN NFPA 70, BY A QUALIFIED TESTING AGENCY, AND MARKED FOR INTENDED LOCATION AND APPLICATION.
E. MANUFACTURING STANDARDS - MATERIAL SHALL BE NEW AND APPROVED AND LABELED BY UL WHEREVER STANDARDS HAVE BEEN ESTABLISHED BY THAT AGENCY. DEFECTIVE EQUIPMENT OR EQUIPMENT DAMAGED IN THE COURSE OF INSTALLATION OR TEST SHALL BE REPLACED OR REPAIRED IN A MANNER MEETING THE APPROVAL OF THE OWNER. ALL ITEMS OF THE SAME TYPE AND RATING SHALL BE IDENTICAL.
F. TRADE NAMES - UNLESS SPECIFICALLY IDENTIFIED OTHERWISE, MANUFACTURERS' NAMES AND CATALOG NUMBERS INDICATED HEREIN AND ON THE DRAWINGS ARE NOT INTENDED TO BE PROPRIETARY DESIGNATIONS. THEY ARE TO INDICATE GENERAL TYPE AND QUALITY OF MATERIALS AND EQUIPMENT REQUIRED. EQUIPMENT AND MATERIAL BY OTHER MANUFACTURERS WHICH IN THE OPINION OF THE ENGINEER ARE OF EQUAL QUALITY AND WHICH WILL PRODUCE THE SAME RESULTS WILL BE CONSIDERED ACCEPTABLE.
G. "FURNISH" SHALL MEAN TO PURCHASE, DELIVER TO JOB SITE, AND UNLOAD FROM TRUCK AT JOB SITE. "INSTALL" SHALL MEAN TO MOUNT IN PLACE, MAKE ALL NECESSARY CONNECTIONS AS SPECIFIED ON PLANS, AND ON SHOP DRAWINGS. "PROVIDE" SHALL MEAN TO FURNISH AND INSTALL.
H. ELECTRICAL CONTRACTOR SHALL COORDINATE ALL EQUIPMENT VOLTAGES WITH MECHANICAL CONTRACTORS AND/OR OWNER'S/ARCHITECT'S PROVIDED EQUIPMENT PRIOR TO EQUIPMENT ORDER.
I. MOTORS SHALL BE PROVIDED WITH DISCONNECTING MEANS EVEN WHERE NOT INDICATED ON DRAWINGS.
J. CONTROL, INTERLOCK AND INTERNAL EQUIPMENT - WIRING, REGARDLESS OF VOLTAGE, SHALL BE PROVIDED BY OTHERS UNLESS SPECIFICALLY SHOWN HERE.
K. LABELING OF EQUIPMENT - ALL PANELBOARDS, CABINETS, SAFETY SWITCHES, MOTOR DISCONNECT SWITCHES, AND MOTOR CONTROLLERS SHALL BE IDENTIFIED BY MACHINE ENGRAVED LAMINATED PLASTIC DESIGNATION PLATES PERMANENTLY ATTACHED THERETO WITH SELF-TAPPING SCREWS OR RIVETS. ALL COMPONENT PARTS OF EACH ITEM OF EQUIPMENT OR DEVICE SHALL BEAR THE MANUFACTURER'S NAMEPLATE, GIVING NAME OF MANUFACTURER, DESCRIPTION, SIZE TYPE, SERIAL AND MODEL NUMBER AND ELECTRICAL CHARACTERISTICS IN ORDER TO FACILITATE MAINTENANCE OR REPLACEMENT. PROVIDE UPDATED PANEL DIRECTORIES FOR ALL NEW AND MODIFIED EXISTING PANELS TO INDICATE CORRECT CIRCUITING DESIGNATIONS.
L. GROUNDING - THE ENTIRE ELECTRICAL SYSTEM, INCLUDING EQUIPMENT FRAMES, CONDUIT, SWITCHES, CONTROLLERS, WIREWAYS, AND ALL OTHER SUCH EQUIPMENT SHALL BE PERMANENTLY AND EFFECTIVELY GROUNDED IN ACCORDANCE WITH THE NEC. GROUNDING OF EACH TRANSFORMER SECONDARY SHALL BE PROVIDED AND EACH SHALL BE CONSIDERED AS A SEPARATE SERVICE GROUND. PROVIDE A SEPARATE GROUND CONDUCTOR IN ALL BRANCH CIRCUIT CONDUITS SIZED IN ACCORDANCE WITH THE NEC.
M. THIS CONTRACTOR SHALL FURNISH AND INSTALL ALL ANGLE IRON, CHANNEL IRON, RODS, SUPPORTS, HANGERS, CONCRETE OR PLYWOOD REQUIRED TO INSTALL, MOUNT AND SUPPORT ANY ELECTRICAL EQUIPMENT OR DEVICE CALLED FOR ON THE PLANS.
N. SUPPORTING MATERIAL SHALL BE COMPLETE WITH HANGERS, CONNECTORS, BOLTS, CLAMPS AND NECESSARY ACCESSORIES TO MAKE A COMPLETE INSTALLATION. SUPPORTING MATERIAL SHALL BE GALVANIZED, PAINTED OR OTHERWISE SUITABLY FINISHED.
O. ALL SURFACE-MOUNTED EQUIPMENT ON BLOCK WALLS SHALL BE MOUNTED ON 3/4" PLYWOOD BACKBOARD. ALL FLOOR- MOUNTED EQUIPMENT SHALL BE INSTALLED ON A 4" HIGH CONCRETE HOUSEKEEPING PAD.
P. ALL ELECTRICAL WORK SHALL BE INSTALLED TO MAINTAIN ALL CLEARANCES AS DEFINED IN ARTICLE NEC 110.26 AND ITS SUBSEQUENT SUBSECTIONS. NO DUCT, CONDUIT, PIPE, ETC. NOT DIRECTLY ASSOCIATED WITH THAT PIECE OF ELECTRICAL EQUIPMENT SHALL BE LOCATED IN THE CLEARANCE SPACE AS DEFINED BY THE NEC. ELECTRICAL CONTRACTOR IS RESPONSIBLE FOR COORDINATION OF OTHER TRADES TO MAINTAIN THESE CLEARANCES.
Q. SCHEDULE OF WORK - THE SCHEDULE OF THE ELECTRICAL WORK SHALL BE ARRANGED TO SUIT THE PROGRESS OF WORK BY THE OTHER TRADES AND SHALL IN NO WAY RETARD PROGRESS OF CONSTRUCTION OF THE PROJECT.
R. DURING CONSTRUCTION - KEEP AN ACCURATE RECORD OF ALL DEVIATIONS BETWEEN THE WORK AS SHOWN ON THE CONTRACT DRAWINGS AND THAT WHICH IS ACTUALLY INSTALLED ON A SET OF PRINTS OF THE ELECTRICAL DRAWINGS, AND NOTE CHANGES THEREON WITH RED MARKS, IN A NEAT AND ACCURATE MANNER. WHEN ALL REVISIONS HAVE BEEN SHOWN ON THESE PRINTS TO INDICATE THE WORK AS FINALLY INSTALLED, THE PRINTS SHALL BE DELIVERED TO THE ENGINEER, BEFORE FINAL PAYMENT.
S. PERMITS, INSPECTION AND TESTS - THE RIGHT IS RESERVED TO INSPECT AND TEST ANY PORTION OF THE INSTALLATION/EQUIPMENT DURING THE PROGRESS OF ITS ERECTION. THIS CONTRACTOR SHALL TEST ALL WIRING FOR CONTINUITY AND GROUNDS BEFORE CONNECTING ANY FIXTURES OR DEVICES. THIS CONTRACTOR SHALL TEST THE ENTIRE SYSTEM WHEN THE WORK IS FINALLY COMPLETED TO ENSURE THAT ALL PORTIONS ARE FREE FROM SHORT CIRCUITS AND GROUNDS.
T. SECURE AND PAY - FOR ALL REQUIRED PERMITS AND INSPECTIONS. INSPECTION CERTIFICATES FROM LOCAL AUTHORITIES HAVING JURISDICTION SHALL BE DELIVERED TO THE OWNER BEFORE FINAL PAYMENT.
U. TEMPORARY ELECTRICAL SERVICE - TEMPORARY ELECTRICAL SERVICE AT 120/240V, 1-PHASE AND OR 120/208V, 3-PHASE WITH GROUND FAULT INTERRUPTER WITH SOLIDLY GROUNDED NEUTRAL SHALL BE PROVIDED. AMPERAGE AND VOLTAGE SHALL BE COORDINATED WITH SITE AND PROJECT SPECIFIC REQUIREMENTS. PROVIDE ALL NECESSARY TEMPORARY LIGHTING AND RECEPTACLES. GENERAL CONTRACTOR WILL PAY ALL CHARGES, WHICH MAY BE MADE BY THE POWER COMPANY FOR TEMPORARY SERVICE.
V. SUBMITTALS - SUBMIT SHOP DRAWINGS, PRODUCT DATA WITHIN THIRTY (30) DAYS OF AWARD OF CONTRACT AND IN ACCORDANCE WITH THE GENERAL CONDITIONS AND SUPPLEMENTARY CONDITIONS. SUBMITTALS ARE REQUIRED FOR ALL SAFETY SWITCHES, ENCLOSED CIRCUIT BREAKERS, PANELBOARDS, TRANSIENT VOLTAGE SURGE SUPPRESSORS, SURGE PROTECTIVE DEVICE (SPD), TRANSFORMERS, LIGHTING FIXTURES, FIRE ALARM SYSTEM, AND SPECIALTY DEVICES PROVIDED UNDER THIS SPECIFICATION. REVIEW OF SUBMITTALS BY THE ENGINEER AND ANY ASSOCIATED ACTION TAKEN BY THE ENGINEER DOES NOT RELIEVE THE CONTRACTOR OF ANY REQUIREMENTS SET FORTH BY THE CONTRACT DOCUMENTS. PROVIDE PRODUCT DATA FOR EACH TYPE OF PRODUCT UNDER EACH SPECIFICATION CATEGORY.
W. OBTAIN APPROVED SHOP DRAWINGS - SHOWING WIRING DIAGRAMS, CONNECTION DIAGRAMS, ROUGH-IN AND HOOKUP DETAILS, FROM ALL CONTRACTORS FOR ALL EQUIPMENT AND COMPLY THEREWITH.
X. STORAGE AND MATERIALS - SPACE WILL BE ASSIGNED TO THE CONTRACTOR BY THE OWNER FOR THE STORAGE OF MATERIAL. THIS CONTRACTOR WILL BE RESPONSIBLE FOR THE PROTECTION AND SAFEKEEPING OF MATERIALS, TOOLS, AND EQUIPMENT. ALL MATERIALS AND EQUIPMENT SHALL BE KEPT IN ITS ASSIGNED PLACE UNTIL THE TIME OF ITS INSTALLATION. EXCESS MATERIALS, DIRT AND REFUSE SHALL BE PROMPTLY REMOVED FROM THE WORK SITE.
Y. COORDINATION - COOPERATE AND COORDINATE EFFORTS WITH ALL CONTRACTORS ON THE PROJECT. THIS IS ESPECIALLY IMPORTANT IN DETERMINING EXACT LOCATIONS OF ALL SWITCHES, RECEPTACLES AND LIGHTING FIXTURES. ARRANGE LIGHTING FIXTURES IN ACCORDANCE WITH THE ARCHITECTURAL REFLECTED CEILING PLANS UNLESS OTHERWISE INDICATED. COORDINATE LIGHTING FIXTURE LOCATIONS WITH GRILLES, DIFFUSERS, ACCESS PANELS, ETC. VERIFY CEILING AND WALL CONSTRUCTION AND MATERIAL PRIOR TO ORDERING LIGHTING FIXTURES OR OTHER DEVICES TO ENSURE PROPER FIXTURE OR DEVICE IS FURNISHED TO MATCH CONSTRUCTION. THIS VERIFICATION MUST BE EXECUTED REGARDLESS OF INFORMATION PLACED ON THE DRAWINGS. ANY COST INCURRED WHICH IN THE OPINION OF THE OWNER, COULD HAVE BEEN AVOIDED BY THIS STEP SHALL BE THE RESPONSIBILITY OF THE ELECTRICAL CONTRACTOR.
Z. WORK UNDER THIS DIVISION - SHALL PROCEED IN ADVANCE OF THE WORK OF OTHERS WHENEVER POSSIBLE, ELIMINATING ALL CUTTING AND PATCHING. WHEN SUCH PROCEDURE IS IMPOSSIBLE, CUTTING AND PATCHING SHALL BE PROVIDED IN AN APPROVED MANNER. CUTTING SHALL NOT ENDANGER STRUCTURAL INTEGRITY IN ANY WAY. PATCHING SHALL EXACTLY MATCH CONTIGUOUS WORK. ACTUAL WORK OF CUTTING AND PATCHING OF EXISTING SURFACES SHALL BE PERFORMED BY THE SUBCONTRACTOR WHO ORIGINALLY PREPARED THESE SURFACES, E.G., CUTTING AND PATCHING OF MASONRY WALL WILL BE PERFORMED BY THE MASONRY SUBCONTRACTOR. COSTS OF SUCH CUTTING AND PATCHING SHALL BE BORNE BY THE ELECTRICAL SUBCONTRACTOR. CUTTING SHALL BE CAREFULLY DONE AND DAMAGE TO BUILDING, PIPING, WIRING OR EQUIPMENT AS A RESULT OF CUTTING SHALL BE REPAIRED BY SKILLED MECHANICS OF TRADE INVOLVED. PROVIDE ALL CUTTING, PATCHING, PAINTING AND REFINISHING REQUIRED FOR INSTALLATION OF THE ELECTRICAL WORK.
AA. GUARANTEE OF WORK - CONTRACTOR GUARANTEES BY HIS ACCEPTANCE OF THE CONTRACT THAT ALL WORK INSTALLED IS FREE FROM ANY AND ALL DEFECTS IN WORKMANSHIP AND/OR MATERIALS, AND THAT THE APPARATUS WILL DEVELOP CAPACITIES AND CHARACTERISTICS SPECIFIED, AND THAT IF, DURING THE PERIOD OF ONE YEAR OR AS OTHERWISE SPECIFIED, FROM DATE OF CERTIFICATE OF COMPLETION AND ACCEPTANCE OF THE WORK ANY SUCH DEFECTS IN WORKMANSHIP, MATERIAL OR PERFORMANCE APPEAR, HE WILL, WITHOUT COST TO THE OWNER, REMEDY SUCH DEFECTS WITHIN A REASONABLE TIME TO BE SPECIFIED IN NOTICE. IN DEFAULT THEREOF, THE OWNER MAY HAVE SUCH WORK DONE AND CHARGE COST TO CONTRACTOR. EQUIPMENT GUARANTEES FROM DATE OF "START-UP" WILL NOT BE RECOGNIZED.

LOW-VOLTAGE ELECTRICAL POWER CONDUCTORS AND CABLES (260519)

A. COPPER BUILDING WIRE: FLEXIBLE, INSULATED AND UNINSULATED, DRAWN COPPER CURRENT-CARRYING CONDUCTOR WITH AN OVERALL INSULATION LAYER OR JACKET, OR BOTH, RATED 600 V OR LESS.
  1. CONDUCTOR INSULATION: TYPE THHN AND TYPE THWN-2- COMPLY WITH UL 83. TYPE XHHW-2- COMPLY WITH UL 44.
B. METAL-CLAD CABLE, TYPE MC: A FACTORY ASSEMBLY OF ONE OR MORE CURRENT-CARRYING INSULATED CONDUCTORS IN AN OVERALL METALLIC SHEATH. COMPLY WITH UL 1569.
  1. GROUND CONDUCTOR SHALL BE INSULATED. CONDUCTOR INSULATION TYPE THHN/THWN-2 SHALL COMPLY WITH UL 83. CONDUCTOR INSULATION TYPE XHHW-2 SHALL COMPLY WITH UL 44.
  2. ARMOR SHALL BE STEEL OR ALUMINUM, INTERLOCKED. JACKET SHALL BE PVC APPLIED OVER ARMOR.
C. CONNECTORS AND SPLICES: FACTORY-FABRICATED CONNECTORS, SPLICES, AND LUGS OF SIZE, AMPACITY RATING, MATERIAL, TYPE, AND CLASS FOR APPLICATION AND SERVICE INDICATED.
  1. FOR STEEL AND ALUMINUM JACKETED CABLES, ZINC DIE-CAST WITH SET SCREWS, DESIGNED TO CONNECT CONDUCTORS SPECIFIED IN THIS SECTION.
  2. LUGS: ONE PIECE, SEAMLESS, DESIGNED TO TERMINATE CONDUCTORS SPECIFIED IN THIS SECTION. MATERIAL SHALL BE COPPER. TYPE SHALL BE ONE OR TWO HOLE WITH STANDARD OR LONG BARRELS. TERMINATIONS SHALL BE COMPRESSION.
D. FEEDERS: COPPER UNLESS OTHERWISE INDICATED ON THE RISER DIAGRAM. CONDUCTORS SHALL BE SOLID OR STRANDED FOR NO. 10 AWG AND SMALLER; STRANDED FOR NO. 8 AWG AND LARGER.
E. BRANCH CIRCUITS: COPPER UNLESS OTHERWISE INDICATED ON THE RISER DIAGRAM AND SCHEDULES. SOLID OR STRANDED FOR NO. 10 AWG AND SMALLER; STRANDED FOR NO. 8 AWG AND LARGER. WIRE SMALLER THAN NO. 12 AWG SHALL NOT BE USED FOR LIGHTING AND POWER CIRCUITS.
F. POWER-LIMITED FIRE ALARM AND CONTROL: SOLID FOR NO. 12 AWG AND SMALLER.
G. APPLICATIONS AND WIRING METHODS: SERVICE ENTRANCE- TYPE THHN-THWN OR XHHW-2, SINGLE CONDUCTORS IN RACEWAY. FEEDERS AND BRANCH CIRCUITING- TYPE THHN-THWN, SINGLE CONDUCTORS IN RACEWAY. METAL-CLAD CABLE, TYPE MC, SHALL BE PERMISSIBLE WHERE INSTALLED AS BRANCH CIRCUITING CONCEALED IN ACCESSIBLE CEILINGS, WALLS, AND PARTITIONS, OR WHERE INSTALLED BELOW RAISED FLOORING.
H. CONCEAL CABLES IN FINISHED WALLS, CEILINGS, AND FLOORS UNLESS OTHERWISE INDICATED. INSTALL EXPOSED CABLES PARALLEL AND PERPENDICULAR TO SURFACES OF EXPOSED STRUCTURAL MEMBERS, AND FOLLOW SURFACE CONTOURS WHERE POSSIBLE.
I. METAL CLAD CABLING SHALL BE SECURED EVERY SIX FEET AND WITHIN 12 INCHES OF EVERY BOX OR TERMINATION AS REQUIRED BY CODE. INSTALLATION OF METAL CLAD CABLING SHALL BE DONE IN A NEAT AND WORKMANLIKE MANNER AND FOLLOW OR BE PERPENDICULAR TO BUILDING LINES.
J. EACH DESIGNED CIRCUIT HOMERUN SHALL HAVE ITS OWN INDIVIDUAL GROUND CONDUCTOR. CONDUIT SHALL NOT BE USED A GROUND CONDUCTOR.
K. TIGHTEN ELECTRICAL CONNECTORS AND TERMINALS ACCORDING TO MANUFACTURER'S PUBLISHED TORQUE-TIGHTENING VALUES. USE TORQUE VALUES SPECIFIED IN UL 486A-486B WHERE NOT PUBLISHED.
L. MAKE SPLICES, TERMINATIONS, AND TAPS THAT ARE COMPATIBLE WITH CONDUCTOR MATERIAL AND THAT POSSESS EQUIVALENT OR BETTER MECHANICAL STRENGTH AND INSULATION RATINGS THAN UNSPLICED CONDUCTORS.
M. INSTALL CONDUCTORS AT EACH OUTLET, WITH AT LEAST 6 INCHES OF SLACK.
N. ALL EXTERIOR WIRING CONNECTIONS, AND THOSE MADE AT OR BELOW GRADE SHALL BE WATERPROOF WITH UL LISTED WATERPROOF CONNECTORS.
O. COPPER CONDUCTORS #10 AWG AND SMALLER SHALL BE TERMINATED AND SPLICED WITH WIRE NUT CONNECTORS. THE NYLON SELF_INSULATED TYPE SHALL BE USED TO ISOLATE THE TERMINATION FROM OTHER METAL PARTS AND EQUIPMENT. PUSH-ON WIRE CONNECTORS, OTHER THAN FOR LUMINAIRE DISCONNECTS, ARE NOT PERMITTED.
P. COPPER CONDUCTORS #8 AWG AND LARGER SHALL BE TERMINATED, SPLICED, AND TAPPED WITH COLOR_KEYED COMPRESSION CONNECTORS. THE MANUFACTURERS RECOMMENDED TOOLS AND DIES SHALL BE USED.
Q. COPPER CABLE LUG CONNECTIONS #8 AND LARGER TO COPPER BUS BAR MAINS AND BRANCHES SHALL USE COPPER SOLDERLESS CONNECTORS HAVING EITHER 2_BOLT CAST COPPER CLAMPS OR COMPRESSION CONNECTORS, WITH MANUFACTURER'S RECOMMENDED HEXAGONAL DIES AND HYDRAULIC COMPRESSION TOOLS.
R. PLENUM RATED CABLE OR WIRING IN METAL CONDUIT SHALL BE UTILIZED IN ALL PLENUM RATED SPACES.

GROUNDING AND BONDING FOR ELECTRICAL SYSTEMS (260526)

A. COMPLY WITH UL 467 FOR GROUNDING AND BONDING MATERIALS AND EQUIPMENT.
B. INSULATED CONDUCTORS: COPPER OR TINNED-COPPER WIRE OR CABLE INSULATED FOR 600 V.
C. GROUNDING BUS: PREDRILLED RECTANGULAR BARS OF ANNEALED COPPER, 1/4 BY 4 INCHES IN CROSS SECTION, WITH 9/32-INCH HOLES SPACED 1-1/8 INCHES APART. STAND-OFF INSULATORS FOR MOUNTING SHALL COMPLY WITH UL 891 FOR USE IN SWITCHBOARDS, 600 V AND SHALL BE LEXAN OR PVC, IMPULSE TESTED AT 5000 V. MINIMUM SIZE SHALL BE 24" IN LENGTH.
D. GROUND RODS SHALL BE COPPER-CLAD STEEL; 3/4 INCH BY 10 FEET. GROUND PLATES SHALL BE 1/4 INCH THICK, HOT-DIP GALVANIZED.
E. INSTALL SOLID CONDUCTOR FOR NO. 8 AWG AND SMALLER, AND STRANDED CONDUCTORS FOR NO. 6 AWG AND LARGER UNLESS OTHERWISE INDICATED.
F. UNDERGROUND GROUNDING CONDUCTORS: INSTALL BARE COPPER CONDUCTOR, NO. 3/0 AWG MINIMUM. BURY AT LEAST 24 INCHES BELOW GRADE.
G. ISOLATED GROUNDING CONDUCTORS: GREEN-COLORED INSULATION WITH CONTINUOUS YELLOW STRIPE. ON FEEDERS WITH ISOLATED GROUND, IDENTIFY GROUNDING CONDUCTOR WHERE VISIBLE TO NORMAL INSPECTION, WITH ALTERNATING BANDS OF GREEN AND YELLOW TAPE, WITH AT LEAST THREE BANDS OF GREEN AND TWO BANDS OF YELLOW.
H. CONDUCTOR TERMINATIONS AND CONNECTIONS: PIPE AND EQUIPMENT GROUNDING CONDUCTOR TERMINATIONS- BOLTED CONNECTORS. UNDERGROUND CONNECTIONS- WELDED CONNECTORS EXCEPT AT TEST WELLS AND AS OTHERWISE INDICATED. CONNECTIONS TO GROUND RODS AT TEST WELLS- BOLTED CONNECTORS. CONNECTIONS TO STRUCTURAL STEEL- WELDED CONNECTORS.
I. GROUNDING AT THE SERVICE: EQUIPMENT GROUNDING CONDUCTORS AND GROUNDING ELECTRODE CONDUCTORS SHALL BE CONNECTED TO THE GROUND BUS. INSTALL A MAIN BONDING JUMPER BETWEEN THE NEUTRAL AND GROUND BUSES.
J. INSTALL INSULATED EQUIPMENT GROUNDING CONDUCTORS WITH ALL FEEDERS AND BRANCH CIRCUITS.
K. INSTALL INSULATED EQUIPMENT GROUNDING CONDUCTORS WITH THE FOLLOWING ITEMS, IN ADDITION TO THOSE REQUIRED BY NFPA 70: FEEDERS AND BRANCH CIRCUITS, LIGHTING CIRCUITS, RECEPTACLE CIRCUITS, SINGLE-PHASE MOTOR AND APPLIANCE BRANCH CIRCUITS, THREE-PHASE MOTOR AND APPLIANCE BRANCH CIRCUITS, FLEXIBLE RACEWAY RUNS, METAL-CLAD CABLE RUNS, COMPUTER AND RACK-MOUNTED ELECTRONIC EQUIPMENT CIRCUITS. INSTALL INSULATED EQUIPMENT GROUNDING CONDUCTOR IN BRANCH-CIRCUIT RUNS FROM POWER PANELS AND POWER-DISTRIBUTION UNITS.
L. WHERE UNGROUNDED CONDUCTORS ARE INCREASED IN SIZE FROM THE MINIMUM SIZE THAT HAS SUFFICIENT AMPACITY FOR THE INTENDED INSTALLATION, THE EQUIPMENT GROUNDING CONDUCTOR SHALL BE INCREASED PER NEC 250.122(B).
M. ROUTE GROUNDING CONDUCTORS ALONG SHORTEST AND STRAIGHTEST PATHS POSSIBLE UNLESS OTHERWISE INDICATED OR REQUIRED BY CODE. AVOID OBSTRUCTING ACCESS OR PLACING CONDUCTORS WHERE THEY MAY BE SUBJECTED TO STRAIN, IMPACT, OR DAMAGE.
N. DRIVE GROUND RODS UNTIL TOPS ARE 6 INCHES BELOW FINISHED FLOOR OR FINAL GRADE UNLESS OTHERWISE INDICATED. INTERCONNECT GROUND RODS WITH GROUNDING ELECTRODE CONDUCTOR BELOW GRADE AND AS OTHERWISE INDICATED. MAKE CONNECTIONS WITHOUT EXPOSING STEEL OR DAMAGING COATING IF ANY. FOR GROUNDING ELECTRODE SYSTEM, INSTALL AT LEAST THREE RODS SPACED AT LEAST ONE-ROD LENGTH FROM EACH OTHER AND LOCATED AT LEAST THE SAME DISTANCE FROM OTHER GROUNDING ELECTRODES, AND CONNECT TO THE SERVICE GROUNDING ELECTRODE CONDUCTOR. SYSTEM SHALL MEET REQUIREMENTS OF NEC 250.52 AND 250.53.
O. TEST WELLS: GROUND ROD DRIVEN THROUGH DRILLED HOLE IN BOTTOM OF HANDHOLE. HANDHOLES SHALL BE AT LEAST 12 INCHES DEEP, WITH COVER.INSTALL AT LEAST ONE TEST WELL FOR EACH SERVICE UNLESS OTHERWISE INDICATED. INSTALL AT THE GROUND ROD ELECTRICALLY CLOSEST TO SERVICE ENTRANCE. SET TOP OF TEST WELL FLUSH WITH FINISHED GRADE OR FLOOR.
P. BONDING STRAPS AND JUMPERS: INSTALL IN LOCATIONS ACCESSIBLE FOR INSPECTION AND MAINTENANCE EXCEPT WHERE ROUTED THROUGH SHORT LENGTHS OF CONDUIT. BOND STRAPS DIRECTLY TO BASIC STRUCTURE, TAKING CARE NOT TO PENETRATE ANY ADJACENT PARTS.
Q. BONDING TO EQUIPMENT MOUNTED ON VIBRATION ISOLATION HANGERS AND SUPPORTS: INSTALL BONDING SO VIBRATION IS NOT TRANSMITTED TO RIGIDLY MOUNTED EQUIPMENT.
R. USE EXOTHERMIC-WELDED CONNECTORS FOR ALL BELOW GRADE CONNECTIONS AND OUTDOOR LOCATIONS; IF A DISCONNECT-TYPE CONNECTION IS REQUIRED, USE A BOLTED CLAMP.
S. METAL WATER SERVICE PIPE: INSTALL INSULATED COPPER GROUNDING CONDUCTORS, IN PVC CONDUIT OR METAL CONDUIT WHERE GROUND WIRE IS TIED TO CONDUIT, FROM BUILDING'S MAIN SERVICE EQUIPMENT, OR GROUNDING BUS, TO MAIN METAL WATER SERVICE ENTRANCES TO BUILDING. CONNECT GROUNDING CONDUCTORS TO MAIN METAL WATER SERVICE PIPES; USE A BOLTED CLAMP CONNECTOR OR BOLT A LUG-TYPE CONNECTOR TO A PIPE FLANGE BY USING ONE OF THE LUG BOLTS OF THE FLANGE. WHERE A DIELECTRIC MAIN WATER FITTING IS INSTALLED, CONNECT GROUNDING CONDUCTOR ON STREET SIDE OF FITTING. BOND METAL GROUNDING CONDUCTOR CONDUIT OR SLEEVE TO CONDUCTOR AT EACH END.
T. WATER METER PIPING: USE BRAIDED-TYPE BONDING JUMPERS TO ELECTRICALLY BYPASS WATER METERS. CONNECT TO PIPE WITH A BOLTED CONNECTOR.
U. BOND EACH ABOVEGROUND PORTION OF GAS PIPING SYSTEM DOWNSTREAM FROM EQUIPMENT SHUTOFF VALVE.
V. BONDING INTERIOR METAL DUCTS: BOND METAL AIR DUCTS TO EQUIPMENT GROUNDING CONDUCTORS OF ASSOCIATED FANS, BLOWERS, ELECTRIC HEATERS, AND AIR CLEANERS. INSTALL TINNED BONDING JUMPER TO BOND ACROSS FLEXIBLE DUCT CONNECTIONS TO ACHIEVE CONTINUITY.
W. GROUNDING FOR STEEL BUILDING STRUCTURE: INSTALL A DRIVEN GROUND ROD AT BASE OF EACH CORNER COLUMN AND AT INTERMEDIATE EXTERIOR COLUMNS AT DISTANCES NOT MORE THAN 60 FEET APART.
X. MAKE CONNECTIONS SO POSSIBILITY OF GALVANIC ACTION OR ELECTROLYSIS IS MINIMIZED. SELECT CONNECTORS, CONNECTION HARDWARE, CONDUCTORS, AND CONNECTION METHODS SO METALS IN DIRECT CONTACT ARE GALVANICALLY COMPATIBLE.

RACEWAYS AND BOXES FOR ELECTRICAL SYSTEMS (260533)

A. METAL CONDUIT:
  1. GRC: COMPLY WITH ANSI C80.1.
  2. IMC: COMPLY WITH ANSI C80.6.
  3. PVC-COATED STEEL CONDUIT: PVC-COATED RIGID STEEL CONDUIT IMC. COMPLY WITH NEMA RN 1.
  4. EMT: COMPLY WITH ANSI C80.3.
  5. FMC: COMPLY WITH UL 1; ZINC-COATED STEEL OR ALUMINUM.
  6. LFMC: FLEXIBLE STEEL CONDUIT WITH PVC JACKET AND COMPLYING WITH UL 360.
B. METAL FITTINGS:
  1. COMPLY WITH NEMA FB 1 AND UL 514B.
  2. CONDUIT FITTINGS FOR HAZARDOUS (CLASSIFIED) LOCATIONS: COMPLY WITH UL 1203 AND NFPA 70.
  3. FITTINGS FOR EMT: MATERIAL- STEEL OR DIE CAST. TYPE- COMPRESSION.
  4. EXPANSION FITTINGS: PVC OR STEEL TO MATCH CONDUIT TYPE, COMPLYING WITH UL 651, RATED FOR ENVIRONMENTAL CONDITIONS WHERE INSTALLED, AND INCLUDING FLEXIBLE EXTERNAL BONDING JUMPER.
  5. COATING FOR FITTINGS FOR PVC-COATED CONDUIT: MINIMUM THICKNESS OF 0.040 INCH, WITH OVERLAPPING SLEEVES PROTECTING THREADED JOINTS.
C. NONMETALLIC CONDUIT (EXTERIOR):
  1. ENT: COMPLY WITH NEMA TC 13.
  2. RNC: TYPE EPC-80-PVC, COMPLYING WITH NEMA TC 2 AND UL 651 UNLESS OTHERWISE INDICATED.

Oak Park
VILLAGE OF OAK PARK
CONSTRUCTION DOCUMENT(S)
REVIEWED FOR COMPLIANCE
These document(s) has been reviewed for conformance with applicable provisions of the codes and ordinances of the Village of Oak Park. The permit process is a check and balance system that normally involves a licensed designer, plans examiner, contractor, and inspector to ensure the best quality and safest construction possible. As much as the mentioned professionals attempt to achieve full code compliance every effort has been made to identify all code deficiencies however; failure to identify a code deficiency during plan review and inspection does not alleviate any obligation to comply with all applicable code provisions. Ultimately the owner and contractor are responsible for full code compliance.
KEEP A PRINTED APPROVED COPY OF THE PLANS ON SITE AT ALL TIMES FOR CONTRACTORS AND INSPECTORS
- Signage is required to provide the address, contractor name and emergency contact information
- Before you dig call J.U.L.I.E @ 811
- Construction hours are 7:00AM through 6:00PM all seven days a week
- Address numbers shall be posted in the front and in the alley of the site (if applicable)
- Trees shall be protected in the parkways; do not block sidewalks or alleyways
- Portable toilets shall be properly maintained a minimum of 10' from the lot line
- Construction fencing shall secure the site and materials(6' high for res. & 8' high for comm. sites)
- Respect the neighboring properties; do not trespass on or damage neighboring properties
- Keep the site clean, safe, organized and free from debris.
- Maintain all guardrails, walkways, ladders and stairs in a safe condition
Any and all changes and/or deviations to the approved plans shall be proposed in writing, in triplicate, for a complete re-review and re-approval.

625 W Adams Street – 19th Floor
Chicago, IL 60661
312.320.3668

LICENSED PROFESSIONAL ENGINEER
ALEXANDER G. RADKOFF
062-073334
OF ILLINOIS

DESIGN FIRM LIC. NO: 184008703-002
DESIGN FIRM LIC. NO. EXP.: 04.30.2027
ILLINOIS LICENCE NUMBER: 062.073334
LIC. EXP.: 11.30. 2025

1144 Lake Street, LLC

BASE BUILDING MECHANICAL RENOVATIONS

1144 W LAKE ST
OAK PARK, IL 60301

NO.	DESCRIPTION	DATE
1 (revision triangle)	PERMIT REVISION 1	09/19/2025
1	ISSUED FOR PERMIT	08/25/2025

JOB NO.: 25.068

SCALE: AS SHOWN

TITLE: ELECTRICAL SPECIFICATIONS

SHEET: E0.3

8/24/2025 4:52:45 P

3. LFNC: COMPLY WITH UL 1660.

D. NONMETALLIC FITTINGS (EXTERIOR):
1. FITTINGS FOR ENT AND RNC: COMPLY WITH NEMA TC 3; MATCH TO CONDUIT OR TUBING TYPE AND MATERIAL.
2. FITTINGS FOR LFNC: COMPLY WITH UL 514B.

E. METAL WIREWAYS AND AUXILIARY GUTTERS:
1. SHEET METAL, COMPLYING WITH UL 870 AND NEMA 250, TYPE 1, TYPE 3R, OR TYPE 4 UNLESS OTHERWISE INDICATED, AND SIZED ACCORDING TO NFPA 70. METAL WIREWAYS INSTALLED OUTDOORS SHALL BE LISTED AND LABELED AS DEFINED IN NFPA 70, BY A QUALIFIED TESTING AGENCY, AND MARKED FOR INTENDED LOCATION AND APPLICATION.
2. FITTINGS AND ACCESSORIES: INCLUDE COVERS, COUPLINGS, OFFSETS, ELBOWS, EXPANSION JOINTS, ADAPTERS, HOLD-DOWN STRAPS, END CAPS, AND OTHER FITTINGS TO MATCH AND MATE WITH WIREWAYS AS REQUIRED FOR COMPLETE SYSTEM.
3. WIREWAY COVERS: HINGED TYPE SCREW-COVER TYPE FLANGED-AND-GASKETED TYPE UNLESS OTHERWISE INDICATED.
4. FINISH: MANUFACTURER'S STANDARD ENAMEL FINISH.

F. SURFACE METAL RACEWAYS: GALVANIZED STEEL WITH SNAP-ON COVERS COMPLYING WITH UL 5. MANUFACTURER'S STANDARD ENAMEL FINISH IN COLOR SELECTED BY ARCHITECT. INSTALL SURFACE RACEWAYS ONLY WHERE INDICATED ON DRAWINGS.

G. BOXES, ENCLOSURES, AND CABINETS INSTALLED IN WET LOCATIONS SHALL BE LISTED FOR USE IN WET LOCATIONS. BOXES FOR CEILING FANS SHALL MEET NEC 314.27(C).

H. METAL FLOOR BOXES SHALL BE CAST METAL OR SHEET METAL, RECTANGULAR AND FULLY ADJUSTABLE.

I. LUMINAIRE OUTLET BOXES SHALL BE NONADJUSTABLE, DESIGNED FOR ATTACHMENT OF LUMINAIRES, MARKED FOR MAXIMUM WEIGHT.

J. CAST-METAL ACCESS, PULL, AND JUNCTION BOXES SHALL BE CAST ALUMINUM OR GALVANIZED, CAST IRON WITH GASKETED COVER. PULL BOXES SHALL BE SIZED PER 314.28.

K. BOX EXTENSIONS USED TO ACCOMMODATE NEW BUILDING FINISHES SHALL BE OF SAME MATERIAL AS RECESSED BOX.

L. DEVICE BOX DIMENSIONS: 4 INCHES SQUARE BY 2-1/8 INCHES DEEP OR 4 INCHES BY 2-1/8 INCHES BY 2-1/8 INCHES DEEP. GANGABLE BOXES ARE PROHIBITED.

M. CABINETS: NEMA 250, TYPE 1 [TYPE 3R] [TYPE 12] GALVANIZED-STEEL BOX WITH REMOVABLE INTERIOR PANEL AND REMOVABLE FRONT, FINISHED INSIDE AND OUT WITH MANUFACTURER'S STANDARD ENAMEL. HINGED DOOR IN FRONT COVER WITH FLUSH LATCH AND CONCEALED HINGE. KEY LATCH TO MATCH PANELBOARDS. METAL BARRIERS TO SEPARATE WIRING OF DIFFERENT SYSTEMS AND VOLTAGE. ACCESSORY FEET WHERE REQUIRED FOR FREESTANDING EQUIPMENT.

N. PROVIDE SUPPORT FOR ALL BOXES AND CONDUIT PER NEC TABLE 300.19.

O. APPLY RACEWAY PRODUCTS AS SPECIFIED BELOW UNLESS OTHERWISE INDICATED:
1. OUTDOORS
a. EXPOSED CONDUIT: GRC, IMC, RNC, TYPE EPC-80-PVC
b. CONCEALED CONDUIT, ABOVEGROUND: GRC, IMC AND EMT.
c. UNDERGROUND CONDUIT: RNC, TYPE EPC-80-PVC, DIRECT BURIED AND CONCRETE ENCASED WHERE UNDER DRIVES AND PARKING AREAS.
d. CONNECTION TO VIBRATING EQUIPMENT (INCLUDING TRANSFORMERS AND HYDRAULIC, PNEUMATIC, ELECTRIC SOLENOID, OR MOTOR-DRIVEN EQUIPMENT): LFMC AND LFNC.
e. BOXES AND ENCLOSURES, ABOVEGROUND: NEMA 250, TYPE 3R AND TYPE 4 OR 4X.
2. INDOORS
a. EXPOSED, NOT SUBJECT TO PHYSICAL DAMAGE: EMT.
b. EXPOSED, NOT SUBJECT TO SEVERE PHYSICAL DAMAGE: EMT.
c. EXPOSED AND SUBJECT TO SEVERE PHYSICAL DAMAGE: GRC. RACEWAY LOCATIONS INCLUDE THE FOLLOWING: LOADING DOCK, CORRIDORS USED FOR TRAFFIC OF MECHANIZED CARTS, FORKLIFTS, AND PALLET-HANDLING UNITS, MECHANICAL ROOMS.
d. CONCEALED IN CEILINGS AND INTERIOR WALLS AND PARTITIONS: EMT
e. CONNECTION TO VIBRATING EQUIPMENT (INCLUDING TRANSFORMERS AND HYDRAULIC, PNEUMATIC, ELECTRIC SOLENOID, OR MOTOR-DRIVEN EQUIPMENT): FMC, EXCEPT USE LFMC IN DAMP OR WET LOCATIONS.
f. DAMP OR WET LOCATIONS: GRC.
3. BOXES AND ENCLOSURES: NEMA 250, TYPE 1, EXCEPT USE NEMA 250, TYPE 4 STAINLESS STEEL IN INSTITUTIONAL AND COMMERCIAL KITCHENS AND DAMP OR WET LOCATIONS.

P. RACEWAY FITTINGS SHALL BE COMPATIBLE WITH RACEWAYS AND SUITABLE FOR USE AND LOCATION. MINIMUM RACEWAY SIZE SHALL BE 3/4-INCH TRADE SIZE. USE THREADED RIGID STEEL CONDUIT FITTINGS FOR RIGID AND INTERMEDIATE STEEL CONDUIT. USE ONLY FITTINGS LISTED FOR USE WITH PVC EXTERNALLY COATED RIGID STEEL CONDUITS. PATCH AND SEAL ALL JOINTS, NICKS, AND SCRAPES IN PVC COATING AFTER INSTALLING CONDUITS AND FITTINGS. USE SEALANT RECOMMENDED BY FITTING MANUFACTURER AND APPLY IN THICKNESS AND NUMBER OF COATS RECOMMENDED BY MANUFACTURER. USE SETSCREW, STEEL FITTINGS FOR USE WITH EMT. USE ONLY FITTINGS LISTED FOR USE WITH FLEXIBLE CONDUIT.

Q. KEEP RACEWAYS AT LEAST 6 INCHES AWAY FROM PARALLEL RUNS OF FLUES AND STEAM OR HOT-WATER PIPES. INSTALL HORIZONTAL RACEWAY RUNS ABOVE WATER AND STEAM PIPING.

R. INSTALL NO MORE THAN THE EQUIVALENT OF THREE 90-DEGREE BENDS IN ANY CONDUIT RUN EXCEPT FOR CONTROL WIRING CONDUITS, FOR WHICH FEWER BENDS ARE ALLOWED. SUPPORT WITHIN 12 INCHES OF CHANGES IN DIRECTION.

S. CONCEAL CONDUIT AND EMT WITHIN FINISHED WALLS, CEILINGS, AND FLOORS UNLESS OTHERWISE INDICATED. INSTALL CONDUITS PARALLEL OR PERPENDICULAR TO BUILDING LINES. ARRANGE STUB-UPS SO CURVED PORTIONS OF BENDS ARE NOT VISIBLE ABOVE FINISHED SLAB.

T. SUPPORT CONDUIT WITHIN 12 INCHES OF ENCLOSURES TO WHICH ATTACHED. ALL JUNCTION BOXES SHALL REMAIN ACCESSIBLE PER NEC REQUIREMENTS.

U. RACEWAYS EMBEDDED IN SLABS: ARRANGE RACEWAYS TO KEEP A MINIMUM OF 3 INCHES OF CONCRETE COVER IN ALL DIRECTIONS. DO NOT EMBED THREADLESS FITTINGS IN CONCRETE UNLESS SPECIFICALLY APPROVED BY ARCHITECT FOR EACH SPECIFIC LOCATIONS. DO NOT INSTALL ALUMINUM CONDUITS, BOXES, OR FITTINGS IN CONTACT WITH CONCRETE OR EARTH.

V. STUB-UPS TO ABOVE RECESSED CEILINGS: USE EMT, IMC, OR RMC FOR RACEWAYS.USE A CONDUIT BUSHING OR INSULATED FITTING TO TERMINATE STUB-UPS NOT TERMINATED IN HUBS OR IN AN ENCLOSURE.

W. THREADED CONDUIT JOINTS, EXPOSED TO WET, DAMP, CORROSIVE, OR OUTDOOR CONDITIONS: APPLY LISTED COMPOUND TO THREADS OF RACEWAY AND FITTINGS BEFORE MAKING UP JOINTS. FOLLOW COMPOUND MANUFACTURER'S WRITTEN INSTRUCTIONS.

X. COAT FIELD-CUT THREADS ON PVC-COATED RACEWAY WITH A CORROSION-PREVENTING CONDUCTIVE COMPOUND PRIOR TO ASSEMBLY.

Y. RACEWAY TERMINATIONS AT LOCATIONS SUBJECT TO MOISTURE OR VIBRATION: USE INSULATING BUSHINGS TO PROTECT CONDUCTORS INCLUDING CONDUCTORS SMALLER THAN NO. 4 AWG.

Z. TERMINATE THREADED CONDUITS INTO THREADED HUBS OR WITH LOCKNUTS ON INSIDE AND OUTSIDE OF BOXES OR CABINETS. INSTALL BUSHINGS ON CONDUITS UP TO 1-1/4-INCH TRADE SIZE AND INSULATED THROAT METAL BUSHINGS ON 1-1/2-INCH TRADE SIZE AND LARGER CONDUITS TERMINATED WITH LOCKNUTS. INSTALL INSULATED THROAT METAL GROUNDING BUSHINGS ON SERVICE CONDUITS.

AA. INSTALL PULL WIRES IN EMPTY RACEWAYS.

BB. FLEXIBLE CONDUIT CONNECTIONS: COMPLY WITH NEMA RV 3. USE A MAXIMUM OF 72 INCHES OF FLEXIBLE CONDUIT FOR EQUIPMENT SUBJECT TO VIBRATION, NOISE TRANSMISSION, OR MOVEMENT; AND FOR TRANSFORMERS AND MOTORS. USE LFMC IN DAMP OR WET LOCATIONS SUBJECT TO SEVERE PHYSICAL DAMAGE. LFNC MAY BE UTILIZED WHERE NOT SUBJECT TO PHYSICAL DAMAGE.

CC. MOUNT BOXES AT HEIGHTS INDICATED ON DRAWINGS. IF MOUNTING HEIGHTS OF BOXES ARE NOT INDIVIDUALLY INDICATED, GIVE PRIORITY TO ADA REQUIREMENTS. INSTALL BOXES WITH HEIGHT MEASURED TO CENTER OF BOX UNLESS OTHERWISE INDICATED.

DD. RECESSED BOXES IN MASONRY WALLS: SAW-CUT OPENING FOR BOX IN CENTER OF CELL OF MASONRY BLOCK, AND INSTALL BOX FLUSH WITH SURFACE OF WALL. PREPARE BLOCK SURFACES TO PROVIDE A FLAT SURFACE FOR A RAINTIGHT CONNECTION BETWEEN BOX AND COVER PLATE OR SUPPORTED EQUIPMENT AND BOX.

EE. HORIZONTALLY SEPARATE BOXES MOUNTED ON OPPOSITE SIDES OF WALLS SO THEY ARE NOT IN THE SAME VERTICAL CHANNEL. LOCATE BOXES SO THAT COVER OR PLATE WILL NOT SPAN DIFFERENT BUILDING FINISHES.

FF. SUPPORT BOXES OF THREE GANGS OR MORE FROM MORE THAN ONE SIDE BY SPANNING TWO FRAMING MEMBERS OR MOUNTING ON BRACKETS SPECIFICALLY DESIGNED FOR THE PURPOSE. FASTEN JUNCTION AND PULL BOXES TO OR SUPPORT FROM BUILDING STRUCTURE. DO NOT SUPPORT BOXES BY CONDUITS.

LIGHTING CONTROL DEVICES (260923)

A. PROVIDE PRODUCTS SPECIFICALLY INDICATED ON DRAWINGS WHERE PRODUCT DATA IS PROVIDED. WHERE SPECIFIC PRODUCT IS NOT INDICATED ON DRAWINGS, FOLLOW SPECIFICATIONS WITHIN THIS SECTION.

B. COORDINATE LAYOUT AND INSTALLATION OF CEILING-MOUNTED DEVICES WITH OTHER CONSTRUCTION THAT PENETRATES CEILINGS OR IS SUPPORTED BY THEM, INCLUDING LIGHT FIXTURES, HVAC EQUIPMENT, SMOKE DETECTORS, FIRE-SUPPRESSION SYSTEM, AND PARTITION ASSEMBLIES.

C. LOW VOLTAGE DIGITAL TIME SWITCH: THE DIGITAL TIME SWITCH SHALL BE PROGRAMMABLE TO TURN LOADS OFF AFTER A PRESET TIME. SHALL BE A FIVE WIRE, COMPLETELY SELF-CONTAINED CONTROL SYSTEM THAT REPLACES A STANDARD TOGGLE SWITCH. SWITCHING MECHANISM SHALL BE A 30V, 1A AIR GAP RELAY. SHALL OPERATE AT EITHER 24 VAC OR 24 VDC, 60 HZ. SHALL HAVE NO MINIMUM LOAD REQUIREMENT. SHALL BE 6-BUTTON WITH 30 MINUTE/1HOUR/2HOUR/4 HOUR/8 HOUR/12 HOUR OPTIONS, WITH EACH OPTION ENGRAVED ON THE BUTTONS TO REFLECT THOSE TIMES. SHALL GIVE VISUAL WARNING AT 5 MINUTES UNTIL LIGHTS TURN OFF, AND AUDIBLE/VISUAL WARNING AT 1 MINUTE BEFORE THE LIGHTS TURN OFF. SHALL HAVE THE OPTION FOR A BEEP WARNING THAT SHALL SOUND EVERY FIVE SECONDS ONCE THE TIME SWITCH COUNTDOWN REACHES ONE MINUTE. SHALL HAVE MANUAL FEATURE FOR TIMER RESET WHERE PRESSING THE ON/OFF SWITCH FOR MORE THAN 2 SECONDS RESETS THE TIMER TO THE PROGRAMMED TIME-OUT PERIOD. SHALL BE CAPABLE OF OPERATING AS AN ON/OFF SWITCH. CAN OPERATE WITH POWER PACKS IN ORDER TO CONTROL ADDITIONAL LOADS.

D. ELECTRONIC TIME SWITCHES: DIGITAL, PROGRAMMABLE, AND WITH ALPHANUMERIC DISPLAY; COMPLYING WITH UL 917. SHALL POSSESS EIGHT CHANNELS WITH EACH CHANNEL BEING INDIVIDUALLY PROGRAMMABLE WITH 40 ON-OFF OPERATIONS PER WEEK AND AN ANNUAL HOLIDAY SCHEDULE THAT OVERRIDES THE WEEKLY OPERATION ON HOLIDAYS. CIRCUITRY SHALL ALLOW CONNECTION OF A PHOTOELECTRIC RELAY AS SUBSTITUTE FOR ON-OFF FUNCTION OF A PROGRAM. AUTOMATIC DAYLIGHT SAVINGS TIME CHANGEOVER SHALL BE PROVIDED. BATTERY BACKUP SHALL NOT BE LESS THAN SEVEN DAYS RESERVE, TO MAINTAIN SCHEDULES AND TIME CLOCK.

E. OUTDOOR PHOTOELECTRIC SWITCHES: SOLID STATE, WITH DPST DRY CONTACTS RATED FOR 1800-VA TUNGSTEN OR 1000-VA INDUCTIVE, TO OPERATE CONNECTED RELAY, CONTACTOR COILS, OR MICROPROCESSOR INPUT; COMPLYING WITH UL 773A. SHALL BE ADJUSTABLE IN 15 DEGREE INCREMENTS. SPECIFIC PRODUCT AS INDICATED ON DRAWINGS.

F. DAYLIGHTING SENSORS: SOLID-STATE, LIGHT-LEVEL SENSOR UNIT, WITH SEPARATE RELAY UNIT, TO DETECT CHANGES IN LIGHTING LEVELS THAT ARE PERCEIVED BY THE EYE. COMPATIBLE WITH LIGHTING SYSTEM AS SPECIFIED.

G. INDOOR OCCUPANCY AND VACANCY SENSORS: WALL- OR CEILING-MOUNTING, SOLID-STATE UNITS WITH A SEPARATE RELAY UNIT. SENSORS SHALL BE ABLE TO OPERATE IN OCCUPANCY OR VACANCY MODE VIA DIP SWITCH.
1. OCCUPANCY SENSOR OPERATION: UNLESS OTHERWISE INDICATED, TURN LIGHTS ON WHEN COVERAGE AREA IS OCCUPIED, AND TURN THEM OFF WHEN UNOCCUPIED; WITH A TIME DELAY FOR TURNING LIGHTS OFF, ADJUSTABLE OVER A MINIMUM RANGE OF 1 TO 30 MINUTES.
2. VACANCY SENSOR OPERATION: UNLESS OTHERWISE INDICATED, LIGHTS ARE MANUALLY TURNED ON AND SENSOR TURNS LIGHTS OFF WHEN THE ROOM IS UNOCCUPIED; WITH A TIME DELAY FOR TURNING LIGHTS OFF, ADJUSTABLE OVER A MINIMUM RANGE OF 1 TO 30 MINUTES.
3. SENSOR SHALL BE SUITABLE FOR MOUNTING IN ANY POSITION ON A STANDARD OUTLET BOX.
4. INDICATOR: LED, TO SHOW WHEN MOTION IS BEING DETECTED DURING TESTING AND NORMAL OPERATION OF THE SENSOR.
5. BYPASS SWITCH: OVERRIDE THE ON FUNCTION IN CASE OF SENSOR FAILURE.
6. PIR TYPE: CEILING MOUNTING; DETECT OCCUPANCY BY SENSING A COMBINATION OF HEAT AND MOVEMENT IN AREA OF COVERAGE.
a. DETECTOR SENSITIVITY: DETECT OCCURRENCES OF 6-INCH- (150-MM-) MINIMUM MOVEMENT OF ANY PORTION OF A HUMAN BODY THAT PRESENTS A TARGET OF NOT LESS THAN 36 SQ. IN. (232 SQ. CM).
b. DETECTION COVERAGE (ROOM): DETECT OCCUPANCY ANYWHERE IN A CIRCULAR AREA OF 1000 SQ. FT. (93 SQ. M) WHEN MOUNTED ON A 96-INCH- (2440-MM-) HIGH CEILING.
c. DETECTION COVERAGE (CORRIDOR): DETECT OCCUPANCY WITHIN 90 FEET (27.4 M) WHEN MOUNTED ON A 10-FOOT- (3-M-) HIGH CEILING.
7. ULTRASONIC TYPE: CEILING MOUNTING; DETECT OCCUPANCY BY SENSING A CHANGE IN PATTERN OF REFLECTED ULTRASONIC ENERGY IN AREA OF COVERAGE.
a. DETECTOR SENSITIVITY: DETECT A PERSON OF AVERAGE SIZE AND WEIGHT MOVING NOT LESS THAN 12 INCHES (305 MM) IN EITHER A HORIZONTAL OR A VERTICAL MANNER AT AN APPROXIMATE SPEED OF 12 INCHES/S (305 MM/S).
b. DETECTION COVERAGE (SMALL ROOM): DETECT OCCUPANCY ANYWHERE WITHIN A CIRCULAR AREA OF 600 SQ. FT. (56 SQ. M) WHEN MOUNTED ON A 96-INCH- (2440-MM-) HIGH CEILING.
c. DETECTION COVERAGE (STANDARD ROOM): DETECT OCCUPANCY ANYWHERE WITHIN A CIRCULAR AREA OF 1000 SQ. FT. (93 SQ. M) WHEN MOUNTED ON A 96-INCH- (2440-MM-) HIGH CEILING.
d. DETECTION COVERAGE (LARGE ROOM): DETECT OCCUPANCY ANYWHERE WITHIN A CIRCULAR AREA OF 2000 SQ. FT. (186 SQ. M) WHEN MOUNTED ON A 96-INCH- (2440-MM-) HIGH CEILING.
e. DETECTION COVERAGE (CORRIDOR): DETECT OCCUPANCY ANYWHERE WITHIN 90 FEET (27.4 M) WHEN MOUNTED ON A 10-FOOT- (3-M-) HIGH CEILING IN A CORRIDOR NOT WIDER THAN 14 FEET (4.3 M).
8. DUAL-TECHNOLOGY TYPE: CEILING MOUNTING; DETECT OCCUPANCY BY USING A COMBINATION OF PIR AND ULTRASONIC DETECTION METHODS IN AREA OF COVERAGE. PARTICULAR TECHNOLOGY OR COMBINATION OF TECHNOLOGIES THAT CONTROLS ON-OFF FUNCTIONS SHALL BE SELECTABLE IN THE FIELD BY OPERATING CONTROLS ON UNIT.
a. SENSITIVITY ADJUSTMENT: SEPARATE FOR EACH SENSING TECHNOLOGY.
b. DETECTOR SENSITIVITY: DETECT OCCURRENCES OF 6-INCH- (150-MM-) MINIMUM MOVEMENT OF ANY PORTION OF A HUMAN BODY THAT PRESENTS A TARGET OF NOT LESS THAN 36 SQ. IN. (232 SQ. CM), AND DETECT A PERSON OF AVERAGE SIZE AND WEIGHT MOVING NOT LESS THAN 12 INCHES (305 MM) IN EITHER A HORIZONTAL OR A VERTICAL MANNER AT AN APPROXIMATE SPEED OF 12 INCHES/S (305 MM/S).
c. DETECTION COVERAGE (STANDARD ROOM): DETECT OCCUPANCY ANYWHERE WITHIN A CIRCULAR AREA OF 1000 SQ. FT. (93 SQ. M) WHEN MOUNTED ON A 96-INCH- (2440-MM-) HIGH CEILING.

H. EMERGENCY TRANSFER DEVICE: THE EMERGENCY TRANSFER DEVICE SHALL PROVIDE ALL REQUIRED FUNCTIONALITY TO ALLOW ANY STANDARD LIGHTING CONTROL DEVICE TO CONTROL EMERGENCY LIGHTING IN CONJUNCTION WITH NORMAL LIGHTING IN ANY AREA WITHIN A BUILDING.
1. THE EMERGENCY LIGHTING CONTROL UNIT SHALL ALLOW CONTROL OF EMERGENCY LIGHTING FIXTURES IN TANDEM WITH NORMAL LIGHTING IN AN AREA WHILE ENSURING THAT EMERGENCY LIGHTING WILL TURN ON IMMEDIATELY TO FULL BRIGHTNESS UPON LOSS OF NORMAL POWER SUPPLYING THE CONTROL DEVICE. EMERGENCY LIGHTING OPERATION SHALL BE INDEPENDENT FOR EACH CONTROLLED AREA AND SHALL NOT REQUIRE A GENERALIZED POWER FAILURE FOR PROPER OPERATION.
2. THE UNIT SHALL AUTOMATICALLY SWITCH EMERGENCY LIGHTING ON AND OFF AS NORMAL LIGHTING IS SWITCHED. WHEN NORMAL POWER IS NOT AVAILABLE, THE UNIT SHALL FORCE AND HOLD EMERGENCY LIGHTING ON REGARDLESS OF THE STATE OF ANY EXTERNAL CONTROL DEVICE UNTIL NORMAL POWER IS RESTORED.
3. THE UNIT SHALL BE UL924 AND CUL LISTED AND LABELED FOR CONNECTION TO BOTH NORMAL AND NORMAL/EMERGENCY LIGHTING POWER SOURCES.

I. SENSOR INSTALLATION
1. INSTALL AND AIM SENSORS IN LOCATIONS TO ACHIEVE NOT LESS THAN 90 PERCENT COVERAGE OF AREAS INDICATED. DO NOT EXCEED COVERAGE LIMITS SPECIFIED IN MANUFACTURER'S WRITTEN INSTRUCTIONS.
2. SENSOR LOCATIONS SHOWN ON THE DRAWINGS ARE TO DENOTE ROOMS THAT SHALL HAVE SENSOR CONTROL. PROVIDE SENSORS IN LOCATIONS AND QUANTITY AS REQUIRED BY THE MANUFACTURER FOR PROPER COVERAGE AND OPERATION OF SPACE. SENSORS SHALL BE LOCATED A MINIMUM OF 6' FROM HVAC SUPPLY DIFFUSERS.
3. PROVIDE ALL RELATED PARTS AND ACCESSORIES FOR A COMPLETE AND OPERATIONAL SYSTEM.
4. CEILING MOUNTED OCCUPANCY SENSORS AND DAYLIGHT SENSORS SHALL BE INSTALLED CENTERED IN CEILING TILES.
5. UNLESS NOTED OTHERWISE WALL MOUNTED SWITCHES SHALL BE INSTALLED ON THE LATCH SIDE OF THE DOOR.
6. INSTALL DAYLIGHTING SENSORS AS INDICATED TO CONTROL LAMPS AS DETAILED ON CONTRACT DOCUMENTS. LOCATE IN CEILING TO NOT INTERFERE OPERATION BY OTHER OBJECTS AND AS REQUIRED BY MANUFACTURER TO DETECT NATURAL LIGHT LEVELS. SET SENSITIVITY LEVELS FOR CONTROL AS RECOMMENDED BY MANUFACTURER.

J. ALL OCCUPANCY SENSORS AND DAYLIGHT SENSORS SHALL BE COMMISSIONED. DUAL TECHNOLOGY SENSORS SHALL BE SET TO "TURN ON" WHEN BOTH TECHNOLOGIES SENSE MOTION AND MAINTAIN "ON" WITH EITHER TECHNOLOGY. SET SENSOR TO MID-RANGE SENSITIVITY WITH A 15 MINUTE DELAY TIME TO OFF. SET LIGHT LEVEL FUNCTION FOR DAYLIGHT SENSORS BETWEEN 11AM AND 1PM DURING A DAY OF MODERATE CLOUD COVER WHERE ILLUMINATION AT THE DESK IS AT LEAST 40 FOOTCANDLES WITH THE LUMINAIRES OFF.

K. OCCUPANCY ADJUSTMENTS: WHEN REQUESTED WITHIN 12 MONTHS OF DATE OF SUBSTANTIAL COMPLETION, PROVIDE ON-SITE ASSISTANCE IN ADJUSTING SENSORS TO SUIT OCCUPIED CONDITIONS. PROVIDE UP TO TWO VISITS TO PROJECT DURING OTHER-THAN-NORMAL OCCUPANCY HOURS FOR THIS PURPOSE.

L. ENGAGE A FACTORY-AUTHORIZED SERVICE REPRESENTATIVE TO TRAIN OWNER'S MAINTENANCE PERSONNEL TO ADJUST, OPERATE, AND MAINTAIN LIGHTING CONTROL DEVICES. REFER TO DIVISION 01 SECTION 017900 "DEMONSTRATION AND TRAINING."

LOW-VOLTAGE DISTRIBUTION TRANSFORMERS (262200)

A. TRANSFORMERS SHALL BE FACTORY-ASSEMBLED AND -TESTED, AIR-COOLED UNITS FOR 60-HZ SERVICE.

B. TRANSFORMERS RATED 15 KVA AND LARGER: COMPLY WITH 10 CFR 431 (DOE 2016) EFFICIENCY LEVELS. MARKED AS COMPLIANT WITH DOE 2016 EFFICIENCY LEVELS BY AN NRTL.

C. DISTRIBUTION TRANSFORMERS SHALL BE LISTED AND LABELED AS COMPLYING WITH UL 1561.
1. CORES SHALL BE ELECTRICAL GRADE, NON-AGING SILICON STEEL WITH HIGH PERMEABILITY AND LOW HYSTERESIS LOSSES.
a. ONE LEG PER PHASE.
b. CORE VOLUME SHALL ALLOW EFFICIENT TRANSFORMER OPERATION AT 10 PERCENT ABOVE THE NOMINAL TAP VOLTAGE.
c. GROUNDED TO ENCLOSURE.
2. COILS SHALL BE CONTINUOUS WINDINGS WITHOUT SPLICES EXCEPT FOR TAPS. MATERIAL SHALL BE COPPER/ALUMINUM WITH BRAZED OR PRESSURE TYPE INTERNAL CONNECTIONS.
3. TRANSFORMERS SMALLER THAN 30 KVA SHALL HAVE CORE AND COILS COMPLETELY RESIN ENCAPSULATED.
4. ENCLOSURES SHALL BE VENTILATED NEMA 250, TYPE 2 TYPE 3R: CORE AND COIL SHALL BE ENCAPSULATED WITHIN RESIN COMPOUND USING A VACUUM-PRESSURE IMPREGNATION PROCESS TO SEAL OUT MOISTURE AND AIR. KVA RATINGS SHALL BE BASED ON CONVECTION COOLING ONLY AND NOT RELYING ON AUXILIARY FANS. WIRING COMPARTMENT SHALL BE SIZED FOR CONDUIT ENTRY AND WIRING INSTALLATION. FINISH SHALL BE GRAY, ANSI 49 OR GRAY ANSI 61 WEATHER-RESISTANT ENAMEL.
5. TAPS FOR TRANSFORMERS 3 KVA AND SMALLER- NONE; 7.5 TO 24 KVA- ONE 5 PERCENT TAP ABOVE AND ONE 5 PERCENT TAP BELOW NORMAL FULL CAPACITY; 25 KVA AND LARGER- TWO 2.5 PERCENT TAPS ABOVE AND FOUR 2.5 PERCENT TAPS BELOW NORMAL FULL CAPACITY.
6. INSULATION CLASS: 220 DEG C, UL-COMPONENT-RECOGNIZED INSULATION SYSTEM WITH A MAXIMUM OF 150 DEG C RISE ABOVE 40 DEG C AMBIENT TEMPERATURE.
7. PROVIDE GROUND-BAR KIT OR A GROUND BAR INSTALLED ON THE INSIDE OF THE TRANSFORMER ENCLOSURE.
8. EACH WINDING SHALL HAVE AN INDEPENDENT, SINGLE, FULL-WIDTH COPPER ELECTROSTATIC SHIELD ARRANGED TO MINIMIZE INTERWINDING CAPACITANCE. ARRANGE COIL LEADS AND TERMINAL STRIPS TO MINIMIZE CAPACITIVE COUPLING BETWEEN INPUT AND OUTPUT TERMINALS. INCLUDE SPECIAL TERMINAL FOR GROUNDING THE SHIELD.
9. WHERE REQUIRED PROVIDE WALL BRACKETS FABRICATED FROM DESIGN DRAWINGS SIGNED AND SEALED BY A LICENSED STRUCTURAL ENGINEER.
10. SOUND LEVEL REQUIREMENTS SHALL BE A MINIMUM OF 3 DB BELOW REQUIREMENTS OF NEMA ST-20.
11. K-FACTOR RATED TRANSFORMERS, WHERE INDICATED, SHALL COMPLY WITH UL 1561 REQUIREMENTS FOR NONSINUSOIDAL LOAD CURRENT-HANDLING CAPABILITY TO THE DEGREE DEFINED BY DESIGNATED K-FACTOR. UNIT SHALL NOT OVERHEAT WHEN CARRYING FULL-LOAD CURRENT WITH HARMONIC DISTORTION CORRESPONDING TO DESIGNATED K-FACTOR, WITHOUT EXCEEDING THE INDICATED INSULATION CLASS IN A 40 DEG C MAXIMUM AMBIENT AND A 24-HOUR AVERAGE AMBIENT OF 30 DEG C. INDICATE VALUE OF K-FACTOR ON TRANSFORMER NAMEPLATE. UNIT SHALL COMPLY WITH REQUIREMENTS OF DOE 2016 EFFICIENCY LEVELS WHEN TESTED ACCORDING TO NEMA TP 2 WITH A K-FACTOR EQUAL TO ONE. NEUTRAL RATED 200 PERCENT OF FULL LOAD CURRENT FOR K-RATED TRANSFORMERS

D. VERIFY THAT FIELD MEASUREMENTS ARE AS NEEDED TO MAINTAIN WORKING CLEARANCES REQUIRED BY NFPA 70 AND MANUFACTURER'S WRITTEN INSTRUCTIONS.

E. ENCLOSURES SHALL BE RATED FOR THE ENVIRONMENT IN WHICH THEY ARE LOCATED. COVERS FOR NEMA 250, TYPE 4X ENCLOSURES SHALL NOT CAUSE ACCESSIBILITY PROBLEMS.

F. INSTALL WALL-MOUNTED TRANSFORMERS LEVEL AND PLUMB WITH WALL BRACKETS FABRICATED FROM DESIGN DRAWINGS SIGNED AND SEALED BY A LICENSED STRUCTURAL ENGINEER. COORDINATE INSTALLATION OF WALL-MOUNTED AND STRUCTURE-HANGING SUPPORTS WITH ACTUAL TRANSFORMER PROVIDED. BRACE WALL-MOUNTED TRANSFORMERS AS SPECIFIED IN SECTION 260548.16 "SEISMIC CONTROLS FOR ELECTRICAL SYSTEMS."

G. INSTALL TRANSFORMERS LEVEL AND PLUMB ON A CONCRETE BASE WITH VIBRATION-DAMPENING SUPPORTS. LOCATE TRANSFORMERS AWAY FROM CORNERS AND NOT PARALLEL TO ADJACENT WALL SURFACE.

H. CONSTRUCT CONCRETE BASES AND ANCHOR FLOOR-MOUNTED TRANSFORMERS ACCORDING TO MANUFACTURER'S WRITTEN INSTRUCTIONS, AND SEISMIC CODES APPLICABLE TO PROJECT. COORDINATE SIZE AND LOCATION OF CONCRETE BASES WITH ACTUAL TRANSFORMER PROVIDED. CAST ANCHOR-BOLT INSERTS INTO BASES. CONCRETE, REINFORCEMENT, AND FORMWORK REQUIREMENTS ARE SPECIFIED WITH CONCRETE.

I. TIGHTEN ELECTRICAL CONNECTORS AND TERMINALS ACCORDING TO MANUFACTURER'S PUBLISHED TORQUE-TIGHTENING VALUES. IF MANUFACTURER'S TORQUE VALUES ARE NOT INDICATED, USE THOSE SPECIFIED IN UL 486A-486B.

J. VACUUM DIRT AND DEBRIS; DO NOT USE COMPRESSED AIR TO ASSIST IN CLEANING.

PANELBOARDS (262416)

A. FURNISH EXTRA MATERIALS THAT MATCH PRODUCTS INSTALLED AND THAT ARE PACKAGED WITH PROTECTIVE COVERING FOR STORAGE AND IDENTIFIED WITH LABELS DESCRIBING CONTENTS.
1. KEYS: TWO SPARES FOR EACH TYPE OF PANELBOARD CABINET LOCK.
2. CIRCUIT BREAKERS INCLUDING GFCI AND GFEP TYPES: TWO SPARES FOR EACH PANELBOARD.

B. MANUFACTURERS: SUBJECT TO COMPLIANCE WITH REQUIREMENTS, PROVIDE PRODUCTS BY ONE OF THE FOLLOWING: EATON, SIEMENS, SQUARE D, OR GE.

C. PANELBOARDS SHALL POSSESS FLUSH AND SURFACE-MOUNTED, DEAD-FRONT CABINET ENCLOSURES. PANELS SHALL BE RATED FOR ENVIRONMENTAL CONDITIONS AT INSTALLED LOCATION. INDOOR DRY AND CLEAN LOCATIONS: NEMA 250, TYPE 1. OUTDOOR LOCATIONS: NEMA 250, TYPE 3R. KITCHEN WASH-DOWN AREAS: NEMA 250, TYPE 4X, STAINLESS STEEL. OTHER WET OR DAMP INDOOR LOCATIONS: NEMA 250, TYPE 4. INDOOR LOCATIONS SUBJECT TO DUST, FALLING DIRT, AND DRIPPING NONCORROSIVE LIQUIDS: NEMA 250, TYPE 5 OR TYPE 12.

D. BRANCH OVERCURRENT PROTECTIVE DEVICES SHALL BE BOLT-ON CIRCUIT BREAKERS, REPLACEABLE WITHOUT DISTURBING ADJACENT UNITS.

E. PANELS SHALL HAVE A MAXIMUM HEIGHT OF 84 INCHES. FRONT SHALL BE SECURED TO BOX WITH CONCEALED TRIM CLAMPS. FOR SURFACE-MOUNTED FRONTS, MATCH BOX DIMENSIONS; FOR FLUSH-MOUNTED FRONTS, OVERLAP BOX. TRIMS SHALL COVER ALL LIVE PARTS AND SHALL HAVE NO EXPOSED HARDWARE. ENTIRE FRONT TRIM SHALL BE HINGED TO BOX AND WITH STANDARD DOOR WITHIN HINGED TRIM COVER. SKIRTS FOR SURFACE-MOUNTED PANELBOARDS SHALL BE SAME GAGE AND FINISH AS PANELBOARD FRONT WITH FLANGES FOR ATTACHMENT TO PANELBOARD, WALL, AND CEILING OR FLOOR.

F. INCOMING MAINS SHALL BE CONVERTIBLE BETWEEN TOP AND BOTTOM. MAIN LUG INTERIORS UP TO 400 AMPERES SHALL BE FIELD CONVERTIBLE TO MAIN BREAKER.

G. PHASE, NEUTRAL, AND GROUND BUSES:

VILLAGE OF OAK PARK
CONSTRUCTION DOCUMENT(S)
REVIEWED FOR COMPLIANCE
KEEP A PRINTED APPROVED COPY OF THE PLANS ON SITE AT ALL TIMES FOR CONTRACTORS AND INSPECTORS

625 W Adams Street – 19th Floor
Chicago, IL 60661
312.320.3668

LICENSED PROFESSIONAL ENGINEER ALEXANDER G. RADKOFF 062-073334 STATE OF ILLINOIS

DESIGN FIRM LIC. NO: 184008703-002
DESIGN FIRM LIC. NO. EXP.: 04.30.2027
ILLINOIS LICENCE NUMBER: 062.073334
LIC. EXP.: 11.30. 2025

1144 Lake Street, LLC

BASE BUILDING MECHANICAL RENOVATIONS

1144 W LAKE ST
OAK PARK, IL 60301

NO.	DESCRIPTION	DATE
1	PERMIT REVISION 1	09/19/2025
1	ISSUED FOR PERMIT	08/25/2025

JOB NO.: 25.068

SCALE: AS SHOWN

TITLE: ELECTRICAL SPECIFICATIONS

SHEET: E.04

8/24/2025 4:52:45

1. MATERIAL: HARD-DRAWN COPPER, 98 PERCENT CONDUCTIVITY. PLATING SHALL RUN ENTIRE LENGTH OF BUS. BUS SHALL BE FULLY RATED THE ENTIRE LENGTH.
2. INTERIORS SHALL BE FACTORY ASSEMBLED INTO A UNIT. REPLACING SWITCHING AND PROTECTIVE DEVICES SHALL NOT DISTURB ADJACENT UNITS OR REQUIRE REMOVING THE MAIN BUS CONNECTORS.
3. EQUIPMENT GROUND BUS: ADEQUATE FOR FEEDER AND BRANCH-CIRCUIT EQUIPMENT GROUNDING CONDUCTORS; BONDED TO BOX.

H. CONDUCTOR CONNECTORS: SUITABLE FOR USE WITH CONDUCTOR MATERIAL AND SIZES.
1. MATERIAL: HARD-DRAWN COPPER, 98 PERCENT CONDUCTIVITY.
2. TERMINATIONS SHALL ALLOW USE OF 75 DEG C RATED CONDUCTORS WITHOUT DERATING.
3. SIZE: LUGS SUITABLE FOR INDICATED CONDUCTOR SIZES, WITH ADDITIONAL GUTTER SPACE, IF REQUIRED, FOR LARGER CONDUCTORS.
4. MAIN AND NEUTRAL LUGS: MECHANICAL TYPE, WITH A LUG ON THE NEUTRAL BAR FOR EACH POLE IN THE PANELBOARD.
5. GROUND LUGS AND BUS-CONFIGURED TERMINATORS: MECHANICAL TYPE, WITH A LUG ON THE BAR FOR EACH POLE IN THE PANELBOARD.
6. FEED-THROUGH LUGS: MECHANICAL TYPE, SUITABLE FOR USE WITH CONDUCTOR MATERIAL. LOCATE AT OPPOSITE END OF BUS FROM INCOMING LUGS OR MAIN DEVICE.
7. SUBFEED (DOUBLE) LUGS: MECHANICAL TYPE SUITABLE FOR USE WITH CONDUCTOR MATERIAL. LOCATE AT SAME END OF BUS AS INCOMING LUGS OR MAIN DEVICE.
8. GUTTER-TAP LUGS: MECHANICAL TYPE SUITABLE FOR USE WITH CONDUCTOR MATERIAL AND WITH MATCHING INSULATING COVERS. LOCATE AT SAME END OF BUS AS INCOMING LUGS OR MAIN DEVICE.

I. PANELBOARDS SHALL HAVE MOUNTING BRACKETS, BUS CONNECTIONS, FILLER PLATES, AND NECESSARY APPURTENANCES REQUIRED FOR FUTURE INSTALLATION OF DEVICES.

J. PANELBOARD SHORT-CIRCUIT CURRENT RATING: FULLY RATED TO INTERRUPT SYMMETRICAL SHORT-CIRCUIT CURRENT AVAILABLE AT TERMINALS. ASSEMBLY LISTED BY AN NRTL FOR 100 PERCENT INTERRUPTING CAPACITY.

K. SURGE SUPPRESSION: FACTORY INSTALLED AS AN INTEGRAL PART OF INDICATED PANELBOARDS, COMPLYING WITH UL 1449 SPD TYPE 1 AT SERVICE AND TYPE 2 FOR ADDITIONAL ELECTRICAL INSTALLATIONS. ALL INSTALLATIONS SHALL COMPLY WITH NEC 285 REQUIREMENTS.
1. PEAK SURGE CURRENT RATING: THE MINIMUM SINGLE-PULSE SURGE CURRENT WITHSTAND RATING PER PHASE SHALL NOT BE LESS THAN 100 KA. THE PEAK SURGE CURRENT RATING SHALL BE THE ARITHMETIC SUM OF THE RATINGS OF THE INDIVIDUAL MOVS IN A GIVEN MODE.
2. PROTECTION MODES AND UL 1449 VPR FOR GROUNDED WYE CIRCUITS WITH 480Y/277 V OR 208Y/120 V, THREE-PHASE, FOUR-WIRE CIRCUITS SHALL NOT EXCEED THE FOLLOWING:
   a. LINE TO NEUTRAL, LINE TO GROUND, NEUTRAL TO GROUND: 1200 V FOR 480Y/277 V, 700 V FOR 208Y/120 V.
   b. LINE TO LINE: 2000 V FOR 480Y/277 V, 1200 V FOR 208Y/120 V.
3. PROTECTION MODES AND UL 1449 VPR FOR 240/120-V, SINGLE-PHASE, THREE-WIRE CIRCUITS SHALL NOT EXCEED THE FOLLOWING:
   a. LINE TO NEUTRAL, LINE TO GROUND, NEUTRAL TO GROUND: 700 V.
   b. LINE TO LINE: 1200 V.
4. SCCR: EQUAL TO THE SCCR OF THE PANELBOARD IN WHICH INSTALLED

L. POWER PANELBOARDS, AS SPECIFIED IN THIS ARTICLE, FALL UNDER REQUIREMENTS OF "DISTRIBUTION PANELBOARDS" IN NEMA PB 1.
1. PANELBOARDS: NEMA PB 1, DISTRIBUTION TYPE.
2. DOORS: SECURED WITH VAULT-TYPE LATCH WITH TUMBLER LOCK; KEYED ALIKE.

M. LIGHTING AND APPLIANCE BRANCH-CIRCUIT PANELBOARDS, AS SPECIFIED IN THIS ARTICLE, COMPLY WITH REQUIREMENTS OF "LIGHTING AND APPLIANCE BRANCH-CIRCUIT PANELBOARDS" IN NEMA PB 1. PANELS KNOWN AS LOADCENTERS ARE NOT ACCEPTABLE

N. IDENTIFICATION: PANELBOARD LABEL SHALL POSSESS MANUFACTURER'S NAME AND TRADEMARK, VOLTAGE, AMPERAGE, NUMBER OF PHASES, AND NUMBER OF POLES SHALL BE LOCATED ON THE INTERIOR OF THE PANELBOARD DOOR. BREAKER LABEL FACEPLATE SHALL LIST CURRENT RATING, UL AND IEC CERTIFICATION STANDARDS, AND AIC RATING. CIRCUIT DIRECTORY CARD SHALL BE PROVIDED INSIDE PANELBOARD DOOR, MOUNTED IN METAL FRAME WITH TRANSPARENT PROTECTIVE COVER. CIRCUIT DIRECTORY SHALL IDENTIFY SPECIFIC PURPOSE WITH DETAIL SUFFICIENT TO DISTINGUISH IT FROM ALL OTHER CIRCUITS.

O. COORDINATE LAYOUT AND INSTALLATION OF PANELBOARDS AND COMPONENTS WITH OTHER CONSTRUCTION THAT PENETRATES WALLS OR IS SUPPORTED BY THEM, INCLUDING ELECTRICAL AND OTHER TYPES OF EQUIPMENT, RACEWAYS, PIPING, ENCUMBRANCES TO WORKSPACE CLEARANCE REQUIREMENTS, AND ADJACENT SURFACES. MAINTAIN REQUIRED WORKSPACE CLEARANCES AND REQUIRED CLEARANCES FOR EQUIPMENT ACCESS DOORS AND PANELS. MOUNT TOP OF TRIM 90 INCHES ABOVE FINISHED FLOOR UNLESS OTHERWISE INDICATED.

WIRING DEVICES (262726)

A. OBTAIN EACH TYPE OF WIRING DEVICE AND ASSOCIATED WALL PLATE FROM SINGLE SOURCE FROM SINGLE MANUFACTURER. ACCEPTABLE MANUFACTURERS ARE EATON, HUBBELL, PASS & SEYMOUR, AND LEVITON, UNLESS OTHERWISE NOTED.

B. CONNECTORS SHALL COMPLY WITH UL 2459 AND SHALL BE MADE WITH STRANDED BUILDING WIRE.

C. DEVICES FOR OWNER-FURNISHED EQUIPMENT SHALL MATCH PLUG CONFIGURATIONS OR EQUIPMENT REQUIREMENTS.

D. STRAIGHT-BLADE RECEPTACLES
1. DUPLEX CONVENIENCE RECEPTACLES: 125 V, 20 A; COMPLY WITH NEMA WD 1, NEMA WD 6 CONFIGURATION 5-20R, UL 498, AND FS W-C-596.
2. ISOLATED-GROUND, DUPLEX CONVENIENCE RECEPTACLES: 125 V, 20 A; COMPLY WITH NEMA WD 1, NEMA WD 6 CONFIGURATION 5-20R, UL 498, AND FS W-C-596. STRAIGHT BLADE; EQUIPMENT GROUNDING CONTACTS SHALL BE CONNECTED ONLY TO THE GREEN GROUNDING SCREW TERMINAL OF THE DEVICE AND WITH INHERENT ELECTRICAL ISOLATION FROM MOUNTING STRAP. ISOLATION SHALL BE INTEGRAL TO RECEPTACLE CONSTRUCTION AND NOT DEPENDENT ON REMOVABLE PARTS.

E. USB CHARGER DEVICES
1. TAMPER-RESISTANT, USB CHARGER RECEPTACLES: 12 V DC, 2.0 A, USB DUAL TYPE A; COMPLY WITH NEMA WD 1, NEMA WD 6 CONFIGURATION 5-20R, UL 498, UL 1310, AND FS W-C-596. SINGLE-PIECE, RIVETLESS, NICKEL-PLATED, ALL-BRASS GROUNDING SYSTEM. NICKEL-PLATED, BRASS MOUNTING STRAP.

F. GFCI RECEPTACLES
1. DUPLEX RECEPTACLE, 125 V, 20 A, STRAIGHT BLADE, NON-FEED-THROUGH TYPE.COMPLY WITH NEMA WD 1, NEMA WD 6 CONFIGURATION 5-20R, UL 498, UL 943 CLASS A, AND FS W-C-596.
2. INCLUDE INDICATOR LIGHT THAT SHOWS WHEN THE GFCI HAS MALFUNCTIONED AND NO LONGER PROVIDES PROPER GFCI PROTECTION.

G. TWIST-LOCKING RECEPTACLES
1. TWIST-LOCK, SINGLE CONVENIENCE RECEPTACLES: 125 V, 20 A; COMPLY WITH NEMA WD 1, NEMA WD 6 CONFIGURATION L5-20R, AND UL 498.

H. SPECIALTY AND CONTROLLED RECEPTACLES
1. REFER TO DRAWING FOR NEMA CONFIGURATION OF ALL SPECIALTY RECEPTACLES.
2. CONTROLLED RECEPTACLES SHALL BE SPLIT CONTROLLED (UNLESS OTHERWISE NOTED ON DRAWINGS.) ALL MARKINGS FOR CONTROL SHALL MEET NEC 406.3 AND BE UL498B LISTED. RATING SHALL BE 20A UNLESS OTHERWISE NOTED ON DRAWINGS.

I. PENDANT CORD-CONNECTOR DEVICES
1. MATCHING, LOCKING-TYPE PLUG AND RECEPTACLE BODY CONNECTOR. NEMA WD 6 CONFIGURATIONS L5-20P AND L5-20R, HEAVY-DUTY GRADE, AND FS W-C-596. BODY: NYLON, WITH SCREW-OPEN, CABLE-GRIPPING JAWS AND PROVISION FOR ATTACHING EXTERNAL CABLE GRIP. EXTERNAL CABLE GRIP: WOVEN WIRE-MESH TYPE MADE OF HIGH-STRENGTH, GALVANIZED-STEEL WIRE STRAND, MATCHED TO CABLE DIAMETER, AND WITH ATTACHMENT PROVISION DESIGNED FOR CORRESPONDING CONNECTOR.

J. CORD AND PLUG SETS: MATCH VOLTAGE AND CURRENT RATINGS AND NUMBER OF CONDUCTORS TO REQUIREMENTS OF EQUIPMENT BEING CONNECTED. CORD: RUBBER-INSULATED, STRANDED-COPPER CONDUCTORS, WITH TYPE SOW-A JACKET; WITH GREEN-INSULATED GROUNDING CONDUCTOR AND AMPACITY OF AT LEAST 130 PERCENT OF THE EQUIPMENT RATING. PLUG: NYLON BODY AND INTEGRAL CABLE-CLAMPING JAWS. MATCH CORD AND RECEPTACLE TYPE FOR CONNECTION.

K. TOGGLE SWITCHES SHALL COMPLY WITH NEMA WD 1, UL 20, AND FS W-S-896, OPERATING AT 120/277 V, 20 A:
1. PILOT-LIGHT SWITCHES: SINGLE POLE, WITH LED-LIGHTED HANDLE, ILLUMINATED WHEN SWITCH IS OFF OPERATING AT 120/277 V, 20 A.
2. KEY-OPERATED SWITCHES: SINGLE POLE, WITH FACTORY-SUPPLIED KEY IN LIEU OF SWITCH HANDLE OPERATING AT 120/277 V, 20 A.

L. WALL SWITCH SENSOR LIGHT SWITCH, DUAL TECHNOLOGY SHALL BE SWITCHBOX-MOUNTED, COMBINATION LIGHTING-CONTROL SENSOR AND CONVENTIONAL SWITCH LIGHTING-CONTROL UNIT USING DUAL TECHNOLOGY. ADJUSTABLE TIME DELAY OF 20 MINUTES. ABLE TO BE LOCKED TO AUTOMATIC-ON OR MANUAL-ON MODE. COMPLY WITH NEMA WD 1, UL 20, AND FS W-S-896.

M. WALL-BOX DIMMERS SHALL BE MODULAR, FULL-WAVE, SOLID-STATE DIMMER SWITCH WITH INTEGRAL, QUIET ON-OFF SWITCHES, WITH AUDIBLE FREQUENCY AND EMI/RFI SUPPRESSION FILTERS. CONTINUOUSLY ADJUSTABLE SLIDER WITH SINGLE-POLE OR THREE-WAY SWITCHING. COMPLY WITH UL 1472.

N. WALL PLATES
1. SINGLE AND COMBINATION TYPES SHALL MATCH CORRESPONDING WIRING DEVICES.
2. PLATE-SECURING SCREWS: METAL WITH HEAD COLOR TO MATCH PLATE FINISH.
3. MATERIAL FOR FINISHED SPACES: SMOOTH, HIGH-IMPACT THERMOPLASTIC.
4. MATERIAL FOR UNFINISHED SPACES: SMOOTH, HIGH-IMPACT THERMOPLASTIC.
5. MATERIAL FOR DAMP LOCATIONS: THERMOPLASTIC WITH SPRING-LOADED LIFT COVER, AND LISTED AND LABELED FOR USE IN WET AND DAMP LOCATIONS.
6. WET-LOCATION, WEATHERPROOF COVER PLATES: NEMA 250, COMPLYING WITH TYPE 3R, WEATHER-RESISTANT THERMOPLASTIC WITH LOCKABLE COVER.

O. FLOOR SERVICE FITTINGS TYPE: MODULAR, DUAL-SERVICE UNITS SUITABLE FOR WIRING METHOD USED. TYPE AS INDICATED ON DRAWINGS. BARRIER SEPARATES POWER FROM VOICE AND DATA COMMUNICATION CABLING. SERVICE PLATE AS INDICATED BY ARCHITECT WITH SATIN FINISH. POWER RECEPTACLE SHALL BE NEMA WD 6 CONFIGURATION 5-20R, GRAY FINISH, UNLESS OTHERWISE INDICATED. DATA COMMUNICATION OUTLET SHALL BE AS DIRECTED BY THE OWNER.

P. POKE-THROUGH ASSEMBLIES: FACTORY-FABRICATED AND -WIRED ASSEMBLY OF BELOW-FLOOR JUNCTION BOX WITH MULTICHANNELED, THROUGH-FLOOR RACEWAY/FIRESTOP UNIT AND DETACHABLE MATCHING FLOOR SERVICE-OUTLET ASSEMBLY. COMPLY WITH UL 514 SCRUB WATER EXCLUSION REQUIREMENTS. SERVICE-OUTLET ASSEMBLY SHALL BE TYPE AS INDICATED ON DRAWINGS. SIZE TO BE SELECTED TO FIT NOMINAL CORED HOLES IN FLOOR AND MATCHED TO FLOOR THICKNESS. UNIT IS LISTED AND LABELED FOR FIRE RATING OF FLOOR-CEILING ASSEMBLY. CLOSURE PLUG: ARRANGED TO CLOSE UNUSED CORED OPENINGS AND REESTABLISH FIRE RATING OF FLOOR.

Q. WIRING DEVICES CONNECTED TO NORMAL POWER SYSTEM SHALL BE COLORED AS SELECTED BY ARCHITECT UNLESS OTHERWISE INDICATED OR REQUIRED BY NFPA 70 OR DEVICE LISTING. WIRING DEVICES CONNECTED TO EMERGENCY POWER SYSTEM SHALL BE RED. ISOLATED-GROUND RECEPTACLES SHALL BE AS SPECIFIED ABOVE, WITH ORANGE TRIANGLE ON FACE. WALL PLATE COLOR SHALL MATCH DEVICE COLOR.

R. INSTALLATION OF DEVICES SHALL COMPLY WITH NECA 1, INCLUDING MOUNTING HEIGHTS LISTED IN THAT STANDARD, UNLESS OTHERWISE INDICATED.

S. PROTECT INSTALLED DEVICES AND THEIR BOXES. DO NOT PLACE WALL FINISH MATERIALS OVER DEVICE BOXES AND DO NOT CUT HOLES FOR BOXES WITH ROUTERS THAT ARE GUIDED BY RIDING AGAINST OUTSIDE OF BOXES. KEEP OUTLET BOXES FREE OF PLASTER, DRYWALL JOINT COMPOUND, MORTAR, CEMENT, CONCRETE, DUST, PAINT, AND OTHER MATERIAL THAT MAY CONTAMINATE THE RACEWAY SYSTEM, CONDUCTORS, AND CABLES. INSTALL WIRING DEVICES AFTER ALL WALL PREPARATION, INCLUDING PAINTING, IS COMPLETE.

T. INSTALL DEVICE BOXES IN BRICK OR BLOCK WALLS SO THAT THE COVER PLATE DOES NOT CROSS A JOINT UNLESS THE JOINT IS TROWELED FLUSH WITH THE FACE OF THE WALL.

U. DO NOT STRIP INSULATION FROM CONDUCTORS UNTIL RIGHT BEFORE THEY ARE SPLICED OR TERMINATED ON DEVICES. STRIP INSULATION EVENLY AROUND THE CONDUCTOR USING TOOLS DESIGNED FOR THE PURPOSE. AVOID SCORING OR NICKING OF SOLID WIRE OR CUTTING STRANDS FROM STRANDED WIRE.

V. CUT BACK AND PIGTAIL OR REPLACE ALL DAMAGED EXISTING CONDUCTORS.STRAIGHTEN CONDUCTORS THAT REMAIN AND REMOVE CORROSION AND FOREIGN MATTER. PIGTAILING EXISTING CONDUCTORS IS PERMITTED, PROVIDED THE OUTLET BOX IS LARGE ENOUGH.

W. REPLACE DEVICES THAT HAVE BEEN IN TEMPORARY USE DURING CONSTRUCTION AND THAT WERE INSTALLED BEFORE BUILDING FINISHING OPERATIONS WERE COMPLETE.

X. CONNECT DEVICES TO BRANCH CIRCUITS USING PIGTAILS THAT ARE NOT LESS THAN 6 INCHES (152 MM) IN LENGTH.

Y. WHEN THERE IS A CHOICE, USE SIDE WIRING WITH BINDING-HEAD SCREW TERMINALS. WRAP SOLID CONDUCTOR TIGHTLY CLOCKWISE, TWO-THIRDS TO THREE-FOURTHS OF THE WAY AROUND TERMINAL SCREW. TIGHTEN UNUSED TERMINAL SCREWS ON THE DEVICE.

Z. WHEN MOUNTING INTO METAL BOXES, REMOVE THE FIBER OR PLASTIC WASHERS USED TO HOLD DEVICE-MOUNTING SCREWS IN YOKES, ALLOWING METAL-TO-METAL CONTACT.

AA. INSTALL GROUND PIN OF VERTICALLY MOUNTED RECEPTACLES UP, AND ON HORIZONTALLY MOUNTED RECEPTACLES TO THE RIGHT.

BB. ALL RECEPTACLES AND LIGHT SWITCHES IN PLENUM SPACES OR ROOMS SHALL BE IN A METAL ENCLOSURE PER NEC 300.22 (C)(3).

CC. DO NOT USE OVERSIZED OR EXTRA-DEEP PLATES. REPAIR WALL FINISHES AND REMOUNT OUTLET BOXES WHEN STANDARD DEVICE PLATES DO NOT FIT FLUSH OR DO NOT COVER ROUGH WALL OPENING.

DD. ARRANGEMENT OF DEVICES: UNLESS OTHERWISE INDICATED, MOUNT FLUSH, WITH LONG DIMENSION VERTICAL AND WITH GROUNDING TERMINAL OF RECEPTACLES ON TOP. GROUP ADJACENT SWITCHES UNDER SINGLE, MULTIGANG WALL PLATES.

EE. ADJUST LOCATIONS OF FLOOR SERVICE OUTLETS AND SERVICE POLES TO SUIT ARRANGEMENT OF PARTITIONS AND FURNISHINGS.

FF. IDENTIFY EACH RECEPTACLE WITH PANELBOARD IDENTIFICATION AND CIRCUIT NUMBER. USE HOT, STAMPED, OR ENGRAVED MACHINE PRINTING WITH BLACK-FILLED LETTERING ON FACE OF PLATE, AND DURABLE WIRE MARKERS OR TAGS INSIDE OUTLET BOXES.

FUSES (262813)

A. FURNISH EXTRA MATERIALS THAT MATCH PRODUCTS INSTALLED AND THAT ARE PACKAGED WITH PROTECTIVE COVERING FOR STORAGE AND IDENTIFIED WITH LABELS DESCRIBING CONTENTS.
1. FUSES: EQUAL TO 10 PERCENT OF QUANTITY INSTALLED FOR EACH SIZE AND TYPE, BUT NO FEWER THAN THREE OF EACH SIZE AND TYPE.

B. SOURCE LIMITATIONS: OBTAIN FUSES, FOR USE WITHIN A SPECIFIC PRODUCT OR CIRCUIT, FROM SINGLE SOURCE FROM SINGLE MANUFACTURER.

C. CARTRIDGE FUSES: NEMA FU 1, CURRENT-LIMITING, NONRENEWABLE CARTRIDGE FUSES WITH VOLTAGE RATINGS CONSISTENT WITH CIRCUIT VOLTAGES. COMPLY WITH NEMA FU 1 FOR CARTRIDGE FUSES.
1. COORDINATE FUSE RATINGS WITH UTILIZATION EQUIPMENT NAMEPLATE LIMITATIONS OF MAXIMUM FUSE SIZE AND WITH SYSTEM SHORT-CIRCUIT CURRENT LEVELS.

D. SPARE-FUSE CABINET: WALL-MOUNTED STEEL UNIT WITH FULL-LENGTH, RECESSED PIANO-HINGED DOOR AND KEY-CODED CAM LOCK AND PULL. SIZE CABINET FOR ADEQUATE STORAGE OF SPARE FUSES SPECIFIED WITH 15 PERCENT SPARE CAPACITY MINIMUM. GRAY, BAKED ENAMEL FINISH. IDENTIFICATION: "SPARE FUSES" IN 1-1/2-INCH- (38-MM-) HIGH LETTERS ON EXTERIOR OF DOOR. FUSE PULLERS: FOR EACH SIZE OF FUSE, WHERE APPLICABLE AND AVAILABLE, FROM FUSE MANUFACTURER.

E. CARTRIDGE FUSE APPLICATIONS:
1. SERVICE ENTRANCE: CLASS L, FAST ACTING
2. FEEDERS: CLASS RK1, FAST ACTING
3. MOTOR BRANCH CIRCUITS: CLASS RK1, TIME DELAY.
4. LARGE MOTOR BRANCH (601-4000 A): CLASS L, TIME DELAY.
5. OTHER BRANCH CIRCUITS: CLASS RK1, TIME DELAY
6. ELEVATOR POWER MODULES: CLASS J

F. INSTALL FUSES IN FUSIBLE DEVICES. ARRANGE FUSES SO RATING INFORMATION IS READABLE WITHOUT REMOVING FUSE.

G. INSTALL SPARE-FUSE CABINET(S) IN LOCATION SHOWN ON THE DRAWINGS OR AS INDICATED IN THE FIELD BY OWNER.

ENCLOSED SWITCHES AND CIRCUIT BREAKERS (262816)

A. FURNISH EXTRA MATERIALS THAT MATCH PRODUCTS INSTALLED AND THAT ARE PACKAGED WITH PROTECTIVE COVERING FOR STORAGE AND IDENTIFIED WITH LABELS DESCRIBING CONTENTS.
1. FUSES: EQUAL TO 10 PERCENT OF QUANTITY INSTALLED FOR EACH SIZE AND TYPE, BUT NO FEWER THAN THREE OF EACH SIZE AND TYPE.

B. OBTAIN ENCLOSED SWITCHES AND CIRCUIT BREAKERS, OVERCURRENT PROTECTIVE DEVICES, COMPONENTS, AND ACCESSORIES, WITHIN SAME PRODUCT CATEGORY, FROM SINGLE MANUFACTURER. ACCEPTABLE MANUFACTURERS ARE EATON, SIEMENS, SQUARE D, AND GE.

C. FUSIBLE SWITCH, 800 A AND SMALLER: NEMA KS 1, TYPE HD, WITH CLIPS OR BOLT PADS TO ACCOMMODATE SPECIFIED FUSES, LOCKABLE HANDLE WITH CAPABILITY TO ACCEPT TWO PADLOCKS, AND INTERLOCKED WITH COVER IN CLOSED POSITION. ALL SERVICE-RATED SWITCHES SHALL BE LABELED FOR USE AS SERVICE ENTRANCE. PROVIDE THE FOLLOWING ACCESSORIES.
1. EQUIPMENT GROUND KIT: INTERNALLY MOUNTED AND LABELED FOR COPPER AND ALUMINUM GROUND CONDUCTORS.
2. NEUTRAL KIT: INTERNALLY MOUNTED; INSULATED, CAPABLE OF BEING GROUNDED, AND BONDED; AND LABELED FOR COPPER AND ALUMINUM NEUTRAL CONDUCTORS.
3. AUXILIARY CONTACT KIT: AUXILIARY SET OF CONTACTS ARRANGED TO OPEN BEFORE SWITCH BLADES OPEN. PROVIDE WHEN USED AS REMOTE DISCONNECT FOR VARIABLE FREQUENCY MOTOR CONTROLLER CIRCUITS.

D. NONFUSIBLE SWITCH, 800 A AND SMALLER: NEMA KS 1, TYPE HD, LOCKABLE HANDLE WITH CAPABILITY TO ACCEPT TWO PADLOCKS, AND INTERLOCKED WITH COVER IN CLOSED POSITION. ALL SERVICE-RATED SWITCHES SHALL BE LABELED FOR USE AS SERVICE ENTRANCE. PROVIDE THE FOLLOWING ACCESSORIES.
1. EQUIPMENT GROUND KIT: INTERNALLY MOUNTED AND LABELED FOR COPPER AND ALUMINUM GROUND CONDUCTORS.
2. NEUTRAL KIT: INTERNALLY MOUNTED; INSULATED, CAPABLE OF BEING GROUNDED, AND BONDED; AND LABELED FOR COPPER AND ALUMINUM NEUTRAL CONDUCTORS.
3. AUXILIARY CONTACT KIT: AUXILIARY SET OF CONTACTS ARRANGED TO OPEN BEFORE SWITCH BLADES OPEN. PROVIDE WHEN USED AS REMOTE DISCONNECT FOR VARIABLE FREQUENCY MOTOR CONTROLLER CIRCUITS.

E. MOLDED-CASE CIRCUIT BREAKER: NEMA AB 1, WITH INTERRUPTING CAPACITY TO MEET AVAILABLE FAULT CURRENTS.
1. THERMAL-MAGNETIC CIRCUIT BREAKERS: INVERSE TIME-CURRENT ELEMENT FOR LOW-LEVEL OVERLOADS AND INSTANTANEOUS MAGNETIC TRIP ELEMENT FOR SHORT CIRCUITS. ADJUSTABLE MAGNETIC TRIP SETTING FOR CIRCUIT-BREAKER FRAME SIZES 250 A AND LARGER.
2. ADJUSTABLE INSTANTANEOUS-TRIP CIRCUIT BREAKERS: MAGNETIC TRIP ELEMENT WITH FRONT-MOUNTED, FIELD-ADJUSTABLE TRIP SETTING.
3. ELECTRONIC TRIP-UNIT CIRCUIT BREAKERS: RMS SENSING; FIELD-REPLACEABLE RATING PLUG; WITH THE FOLLOWING FIELD-ADJUSTABLE SETTINGS: INSTANTANEOUS TRIP, LONG- AND SHORT-TIME PICKUP LEVELS, LONG- AND SHORT-TIME TIME ADJUSTMENTS, GROUND-FAULT PICKUP LEVEL, TIME DELAY, AND I2T RESPONSE.
4. STANDARD FRAME SIZES, TRIP RATINGS, AND NUMBER OF POLES
5. LUGS: MECHANICAL STYLE SUITABLE FOR NUMBER, SIZE, TRIP RATINGS, AND CONDUCTOR MATERIAL.
6. APPLICATION LISTING: HACR FOR HEATING, AIR-CONDITIONING, AND REFRIGERATING EQUIPMENT.
7. GROUND-FAULT PROTECTION: INTEGRALLY MOUNTED RELAY AND TRIP UNIT WITH ADJUSTABLE PICKUP AND TIME-DELAY SETTINGS, PUSH-TO-TEST FEATURE, AND GROUND-FAULT INDICATOR.
8. SHUNT TRIP: 120-V TRIP COIL ENERGIZED FROM SEPARATE CIRCUIT, SET TO TRIP AT 55 PERCENT OF RATED VOLTAGE.
9. UNDERVOLTAGE TRIP: SET TO OPERATE AT 35 TO 75 PERCENT OF RATED VOLTAGE WITHOUT INTENTIONAL OR WITH FIELD-ADJUSTABLE 0.1- TO 0.6-SECOND TIME DELAY.
10. AUXILIARY SWITCH: ONE SPDT SWITCH OR TWO SPDT SWITCHES WITH "A" AND "B" CONTACTS; "A" CONTACTS MIMIC CIRCUIT-BREAKER CONTACTS, "B" CONTACTS OPERATE IN REVERSE OF CIRCUIT-BREAKER CONTACTS.

F. ENCLOSURES SHALL BE NEMA AB 1 AND NEMA KS 1 TO MEET ENVIRONMENTAL CONDITIONS OF INSTALLED LOCATION. INDOOR LOCATIONS: NEMA 250, TYPE 1. OUTDOOR LOCATIONS: NEMA 250, TYPE 3R. OTHER WET OR DAMP INDOOR LOCATIONS: NEMA 250, TYPE 4.
1. CONDUIT ENTRY: NEMA 250 TYPES 4, 4X, AND 12 ENCLOSURES SHALL CONTAIN NO KNOCKOUTS. NEMA 250 TYPES 7 AND 9 ENCLOSURES SHALL BE PROVIDED WITH THREADED CONDUIT OPENINGS IN BOTH ENDWALLS.
2. ENCLOSURES DESIGNATED AS NEMA 250 TYPE 4, 4X STAINLESS STEEL, 12, OR 12K SHALL HAVE A DUAL COVER INTERLOCK MECHANISM TO PREVENT UNINTENTIONAL OPENING OF THE ENCLOSURE COVER WHEN THE CIRCUIT BREAKER IS ON AND TO PREVENT TURNING THE CIRCUIT BREAKER ON WHEN THE ENCLOSURE COVER IS OPEN.
3. ALL ENCLOSURES SHALL INCLUDE A BONDED EQUIPMENT BUS.

G. COORDINATE LAYOUT AND INSTALLATION OF SWITCHES, CIRCUIT BREAKERS, AND COMPONENTS WITH EQUIPMENT SERVED AND ADJACENT SURFACES. INSTALL INDIVIDUAL WALL-MOUNTED SWITCHES AND CIRCUIT BREAKERS WITH TOPS AT UNIFORM HEIGHT UNLESS OTHERWISE INDICATED. INSTALL FUSES IN FUSIBLE DEVICES. COMPLY WITH NFPA 70 AND NECA 1.

LED LIGHTING (265100)

A. PROVIDE LUMINAIRES FROM A SINGLE MANUFACTURER FOR EACH LUMINAIRE TYPE. EACH LUMINAIRE TYPE SHALL BE BINNED WITHIN A THREE-STEP MACADAM ELLIPSE TO ENSURE COLOR CONSISTENCY AMONG LUMINAIRES.

B. DELIVERY, STORAGE, AND HANDLING: PROTECT FINISHES OF EXPOSED SURFACES BY APPLYING A STRIPPABLE, TEMPORARY PROTECTIVE COVERING BEFORE SHIPPING.

C. WARRANTY: MANUFACTURER AND INSTALLER AGREE TO REPAIR OR REPLACE COMPONENTS OF LUMINAIRES THAT FAIL IN MATERIALS OR WORKMANSHIP WITHIN SPECIFIED WARRANTY PERIOD. WARRANTY PERIOD: FIVE YEAR(S) FROM DATE OF SUBSTANTIAL COMPLETION.

D. CRI,CCT, AND VOLTAGE AS INDICATED IN LIGHTING FIXTURE SCHEDULE.

E. RATED LAMP LIFE OF 50,000 HOURS TO L70.

F. LAMPS DIMMABLE FROM 100 PERCENT TO 0 PERCENT OF MAXIMUM LIGHT OUTPUT AS INDICATED ON THE FIXTURE SCHEDULE. WHERE DIMMING DRIVERS ARE UTILIZED, THEY SHALL BE COMPATIBLE WITH LIGHTING CONTROLS DESIGNATED FOR OPERATION OF THOSE FIXTURES.

G. LAMPS, BOTH INTEGRAL TO THE FIXTURE AND SCREW-IN TYPE, SHALL POSSESS A MINIMUM 75% EFFICACY TO MEET ENERGY CODES. LAMPS WITH EFFICACY LESS THAN 75% ARE NOT ACCEPTABLE AND SHALL NOT BE UTILIZED.

H. LUMINAIRE SUPPORT SHALL FOLLOW THE FOLLOWING METHODS:
1. SINGLE-STEM HANGERS: 1/2-INCH (13-MM) STEEL TUBING WITH SWIVEL BALL FITTINGS AND CEILING CANOPY. FINISH SAME AS LUMINAIRE.
2. WIRES: ASTM A 641/A 641 M, CLASS 3, SOFT TEMPER, ZINC-COATED STEEL, 12 GAGE (2.68 MM)
3. ROD HANGERS: 3/16-INCH (5-MM) MINIMUM DIAMETER, CADMIUM-PLATED, THREADED STEEL ROD.
4. HOOK HANGERS: INTEGRATED ASSEMBLY MATCHED TO LUMINAIRE, LINE VOLTAGE, AND EQUIPMENT WITH THREADED ATTACHMENT, CORD, AND LOCKING-TYPE PLUG.

I. INTERNAL TYPE EMERGENCY POWER UNIT: SELF-CONTAINED,
1. MODULAR, BATTERY-INVERTER UNIT, FACTORY MOUNTED
2. WITHIN LUMINAIRE BODY. OPERATE ALL FIXTURE LAMP(S) CONTINUOUSLY AT AN OUTPUT OF FULL LUMEN OUTPUT OF FIXTURE UPON LOSS OF NORMAL POWER. CONNECT UNSWITCHED CIRCUIT TO BATTERY-INVERTER UNIT AND SWITCHED CIRCUIT TO LUMINAIRE BALLAST.
3. OPERATION: RELAY AUTOMATICALLY TURNS LAMP ON WHEN POWER-SUPPLY CIRCUIT VOLTAGE DROPS TO 80 PERCENT OF NOMINAL VOLTAGE OR BELOW. LAMP AUTOMATICALLY DISCONNECTS FROM BATTERY WHEN VOLTAGE APPROACHES DEEP-DISCHARGE LEVEL. WHEN NORMAL VOLTAGE IS RESTORED, RELAY DISCONNECTS LAMPS FROM BATTERY, AND BATTERY IS AUTOMATICALLY RECHARGED AND FLOATED ON CHARGER.
4. TEST PUSH-BUTTON AND INDICATOR LIGHT: VISIBLE AND ACCESSIBLE WITHOUT OPENING LUMINAIRE OR ENTERING CEILING SPACE.
5. PUSH BUTTON: PUSH-TO-TEST TYPE, IN UNIT HOUSING, SIMULATES LOSS OF NORMAL POWER AND DEMONSTRATES UNIT OPERABILITY.
6. INDICATOR LIGHT: LED INDICATES NORMAL POWER ON. NORMAL GLOW INDICATES TRICKLE CHARGE; BRIGHT GLOW INDICATES CHARGING AT END OF DISCHARGE CYCLE.
7. BATTERY: SEALED, MAINTENANCE-FREE, NICKEL-CADMIUM TYPE.
8. CHARGER: FULLY AUTOMATIC, SOLID-STATE, CONSTANT-CURRENT TYPE WITH SEALED POWER TRANSFER RELAY.

VILLAGE OF OAK PARK
CONSTRUCTION DOCUMENT(S)
REVIEWED FOR COMPLIANCE
KEEP A PRINTED APPROVED COPY OF THE PLANS ON SITE AT ALL TIMES FOR CONTRACTORS AND INSPECTORS

625 W Adams Street – 19th Floor
Chicago, IL 60661
312.320.3668

LICENSED PROFESSIONAL ENGINEER
ALEXANDER G. RADKOFF
062-073334
OF ILLINOIS

DESIGN FIRM LIC. NO: 184008703-002
DESIGN FIRM LIC. NO. EXP : 04.30.2027
ILLINOIS LICENCE NUMBER: 062.073334
LIC. EXP.: 11.30. 2025

1144 Lake Street, LLC

BASE BUILDING MECHANICAL RENOVATIONS

1144 W LAKE ST
OAK PARK, IL 60301

NO.	DESCRIPTION	DATE
1	PERMIT REVISION 1	09/19/2025
1	ISSUED FOR PERMIT	08/26/2025

JOB NO.: 25.068

SCALE: AS SHOWN

TITLE: ELECTRICAL SPECIFICATIONS

SHEET: E0.5

8/24/2025 4:52:46 PM

9. INTEGRAL SELF-TEST: FACTORY-INSTALLED ELECTRONIC DEVICE AUTOMATICALLY INITIATES CODE-REQUIRED TEST OF UNIT EMERGENCY OPERATION AT REQUIRED INTERVALS. TEST FAILURE IS ANNUNCIATED BY AN INTEGRAL AUDIBLE ALARM AND A FLASHING RED LED.

J. INSTALL LUMINAIRES LEVEL, PLUMB, AND SQUARE WITH CEILINGS AND WALLS UNLESS OTHERWISE INDICATED. INSTALL LAMPS IN EACH LUMINAIRE.

K. ALL SUPPORTS SHALL BE SIZED AND RATED FOR LUMINAIRE WEIGHT, AND SHALL BE ABLE TO MAINTAIN LUMINAIRE POSITION AFTER CLEANING AND RELAMPING.

L. PROVIDE SUPPORT FOR LUMINAIRE WITHOUT CAUSING DEFLECTION OF CEILING OR WALL. LUMINAIRE MOUNTING DEVICES SHALL BE CAPABLE OF SUPPORTING A HORIZONTAL FORCE OF 100 PERCENT OF LUMINAIRE WEIGHT AND VERTICAL FORCE OF 400 PERCENT OF LUMINAIRE WEIGHT.

M. FLUSH-MOUNTED LUMINAIRE SUPPORT:
1. SECURED TO OUTLET BOX.
2. ATTACHED TO CEILING STRUCTURAL MEMBERS AT FOUR POINTS EQUALLY SPACED AROUND CIRCUMFERENCE OF LUMINAIRE.
3. TRIM RING FLUSH WITH FINISHED SURFACE.

N. WALL-MOUNTED LUMINAIRE SUPPORT:
1. ATTACHED TO STRUCTURAL MEMBERS IN WALLS.
2. DO NOT ATTACH LUMINAIRES DIRECTLY TO GYPSUM BOARD.

O. CEILING-MOUNTED LUMINAIRE SUPPORT:
1. CEILING MOUNT WITH FOUR-POINT PENDANT MOUNT WITH 5/32-INCH- (4-MM-) DIAMETER AIRCRAFT CABLE SUPPORTS ADJUSTABLE TO 120 INCHES (6 M) IN LENGTH.
2. CEILING MOUNT WITH HOOK MOUNT.

P. SUSPENDED LUMINAIRE SUPPORT: DO NOT USE CEILING GRID AS SUPPORT FOR PENDANT LUMINAIRES. CONNECT SUPPORT WIRES OR RODS TO BUILDING STRUCTURE.
1. PENDANTS AND RODS: WHERE LONGER THAN 48 INCHES (1200 MM), BRACE TO LIMIT SWINGING.
2. STEM-MOUNTED, SINGLE-UNIT LUMINAIRES: SUSPEND WITH TWIN-STEM HANGERS. SUPPORT WITH APPROVED OUTLET BOX AND ACCESSORIES THAT HOLD STEM AND PROVIDE DAMPING OF LUMINAIRE OSCILLATIONS. SUPPORT OUTLET BOX VERTICALLY TO BUILDING STRUCTURE USING APPROVED DEVICES.
3. CONTINUOUS ROWS OF LUMINAIRES: USE TUBING OR STEM FOR WIRING AT ONE POINT AND WIRE SUPPORT FOR SUSPENSION FOR EACH UNIT LENGTH OF LUMINAIRE CHASSIS, INCLUDING ONE AT EACH END.

Q. CEILING-GRID-MOUNTED LUMINAIRES SHALL BE SECURED TO ANY REQUIRED OUTLET BOX. SECURE LUMINAIRE TO THE LUMINAIRE OPENING USING APPROVED FASTENERS IN A MINIMUM OF FOUR LOCATIONS, SPACED NEAR CORNERS OF LUMINAIRE. USE APPROVED DEVICES AND SUPPORT COMPONENTS TO CONNECT LUMINAIRE TO CEILING GRID AND BUILDING STRUCTURE IN A MINIMUM OF FOUR LOCATIONS, SPACED NEAR CORNERS OF LUMINAIRE.

R. OCCUPANCY ADJUSTMENTS: WHEN REQUESTED WITHIN 12 MONTHS OF DATE OF SUBSTANTIAL COMPLETION, PROVIDE ON-SITE ASSISTANCE IN ADJUSTING THE DIRECTION OF AIM OF LUMINAIRES TO SUIT OCCUPIED CONDITIONS. MAKE UP TO TWO VISITS TO PROJECT DURING OTHER-THAN-NORMAL HOURS FOR THIS PURPOSE. SOME OF THIS WORK MAY BE REQUIRED DURING HOURS OF DARKNESS. ADJUST THE AIM OF LUMINAIRES IN THE PRESENCE OF THE ARCHITECT.

S. BOLLARD LUMINAIRE INSTALLATION: ALIGN UNITS FOR OPTIMUM DIRECTIONAL ALIGNMENT OF LIGHT DISTRIBUTION. INSTALL ON CONCRETE BASE WITH TOP 4 INCHES (100 MM) ABOVE FINISHED GRADE OR SURFACE AT LUMINAIRE LOCATION. CAST CONDUIT INTO BASE, AND SHAPE BASE TO MATCH SHAPE OF BOLLARD BASE. FINISH BY TROWELING AND RUBBING SMOOTH.

T. INSTALLATION OF INDIVIDUAL GROUND-MOUNTED LUMINAIRES: AIM AS INDICATED ON DRAWINGS.

U. PROVIDE METAL HOUSING WITH GLASS LENS TO MEET UL2043 (SMOKE/FIRE SPREAD: 50/25 OR LESS) IN PLENUM SPACES.

DIGITAL ADDRESSABLE FIRE ALARM SYSTEM (283111)

A. GENERAL CONDITIONS
1. PROVIDE ADDRESSABLE DIGITAL FIRE ALARM SYSTEM INSTALLED AS SHOWN ON DRAWINGS AND DESCRIBED HEREIN. THE OPERATION SHALL BE SUCH THAT ACTUATION OF ANY MANUAL FIRE ALARM STATION OR ANY OTHER INITIATION DEVICE SHALL CAUSE AUDIBLE/VISIBLE SIGNAL DEVICES THROUGHOUT THE BUILDING TO OPERATE, SHALL CAUSE THE MAIN ANNUNCIATOR TO DISPLAY THE "ADDRESS"/"ZONE" OF THE INITIATING DEVICE UNTIL THE DEVICE IS RESTORED TO ITS NORMAL POSITION AND THE CONTROL PANEL IS RESET AND SHALL CAUSE AN ALARM SIGNAL TO BE TRANSMITTED TO A CENTRAL STATION. ALL INITIATING DEVICES SHALL BE FULLY COMPATIBLE WITH EXISTING SYSTEMS AND SHALL BE PER MANUFACTURER'S RECOMMENDATIONS. ALL COMPONENTS SHALL BE ADDRESSABLE OR BE PROVIDED WITH ADDRESSABLE ZONE INTERFACE MODULES.
2. MANUFACTURERS: SUBJECT TO COMPLIANCE WITH REQUIREMENTS, PROVIDE PRODUCTS BY ONE OF THE FOLLOWING:
   a. NOTIFIER; A HONEYWELL COMPANY.
   b. SIEMENS BUILDING TECHNOLOGIES, INC.; FIRE SAFETY DIVISION.
   c. SIMPLEX GRINNELL LP; A TYCO INTERNATIONAL COMPANY.
   d. EDWARDS
3. SYSTEM DESCRIPTION: NONCODED, UL-CERTIFIED ADDRESSABLE SYSTEM, WITH MULTIPLEXED SIGNAL TRANSMISSION AND HORN/STROBE EVACUATION. AUTOMATIC SENSITIVITY CONTROL OF CERTAIN SMOKE DETECTORS. ALL COMPONENTS PROVIDED SHALL BE LISTED FOR USE WITH THE SELECTED SYSTEM. ELECTRICAL COMPONENTS, DEVICES, AND ACCESSORIES: LISTED AND LABELED AS DEFINED IN NFPA 70, BY A QUALIFIED TESTING AGENCY, AND MARKED FOR INTENDED LOCATION AND APPLICATION.
4. SUBMITTALS: SUBMITTALS SHALL BE APPROVED BY AUTHORITIES HAVING JURISDICTION PRIOR TO SUBMITTING THEM TO ARCHITECT.
   a. SHOP DRAWINGS SHALL BE PREPARED BY PERSONS TRAINED AND CERTIFIED BY MANUFACTURER IN FIRE-ALARM SYSTEM DESIGN WITH NICET-CERTIFIED FIRE-ALARM TECHNICIAN, LEVEL III MINIMUM. LICENSED OR CERTIFIED BY AUTHORITIES HAVING JURISDICTION.
   b. PRODUCT DATA: FOR EACH TYPE OF PRODUCT INDICATED.
   c. SHOP DRAWINGS: FOR FIRE-ALARM SYSTEM. INCLUDE PLANS, ELEVATIONS, SECTIONS, DETAILS, AND ATTACHMENTS TO OTHER WORK. INCLUDE THE FOLLOWING:
1. VOLTAGE DROP CALCULATIONS FOR NOTIFICATION APPLIANCE CIRCUITS.
2. BATTERY-SIZE CALCULATIONS.
3. PERFORMANCE PARAMETERS AND INSTALLATION DETAILS FOR EACH DETECTOR, VERIFYING THAT EACH DETECTOR IS LISTED FOR COMPLETE RANGE OF AIR VELOCITY, TEMPERATURE, AND HUMIDITY POSSIBLE WHEN AIR-HANDLING SYSTEM IS OPERATING.
4. AUDIO/ALARM SIGNALING-SERVICE EQUIPMENT RACK OR CONSOLE LAYOUT, GROUNDING SCHEMATIC, AMPLIFIER POWER CALCULATION, AND SINGLE-LINE CONNECTION DIAGRAM.
5. FLOOR PLANS TO INDICATE FINAL OUTLET LOCATIONS SHOWING ADDRESS OF EACH ADDRESSABLE DEVICE. SHOW SIZE AND ROUTE OF CABLE AND CONDUITS.
5. QUALITY ASSURANCE: PERSONNEL SHALL BE TRAINED AND CERTIFIED BY MANUFACTURER FOR INSTALLATION OF UNITS REQUIRED FOR THIS PROJECT. ELECTRICAL COMPONENTS, DEVICES, AND ACCESSORIES: OBTAIN CERTIFICATION ACCORDING TO NFPA 72 BY A UL-LISTED ALARM COMPANY.
6. EXTRA MATERIALS: FURNISH EXTRA MATERIALS THAT MATCH PRODUCTS INSTALLED AND THAT ARE PACKAGED WITH PROTECTIVE COVERING FOR STORAGE AND IDENTIFIED WITH LABELS DESCRIBING CONTENTS.
   a. LAMPS FOR REMOTE INDICATING LAMP UNITS: QUANTITY EQUAL TO 10 PERCENT OF AMOUNT INSTALLED.
   b. LAMPS FOR STROBE UNITS: QUANTITY EQUAL TO 10 PERCENT OF AMOUNT INSTALLED.
   c. SMOKE DETECTORS, FIRE DETECTORS: QUANTITY EQUAL TO 10 PERCENT OF AMOUNT OF EACH TYPE INSTALLED, BUT NO FEWER THAN 1 UNIT OF EACH TYPE.
   d. DETECTOR BASES: QUANTITY EQUAL TO 2 PERCENT OF AMOUNT OF EACH TYPE INSTALLED, BUT NO FEWER THAN 1 UNIT OF EACH TYPE.
   e. KEYS AND TOOLS: ONE EXTRA SET FOR ACCESS TO LOCKED AND TAMPERPROOFED COMPONENTS.
   f. AUDIBLE AND VISUAL NOTIFICATION APPLIANCES: ONE OF EACH TYPE INSTALLED.
   g. FUSES: TWO OF EACH TYPE INSTALLED IN THE SYSTEM.
7. SEQUENCING AND SCHEDULING
   a. EXISTING FIRE-ALARM EQUIPMENT: MAINTAIN EXISTING EQUIPMENT FULLY OPERATIONAL UNTIL NEW EQUIPMENT HAS BEEN TESTED AND ACCEPTED. AS NEW EQUIPMENT IS INSTALLED, LABEL IT "NOT IN SERVICE" UNTIL IT IS ACCEPTED. REMOVE LABELS FROM NEW EQUIPMENT WHEN PUT INTO SERVICE, AND LABEL EXISTING FIRE-ALARM EQUIPMENT "NOT IN SERVICE" UNTIL REMOVED FROM THE BUILDING.
   b. EQUIPMENT REMOVAL: AFTER ACCEPTANCE OF NEW FIRE-ALARM SYSTEM, REMOVE EXISTING DISCONNECTED FIRE-ALARM EQUIPMENT AND WIRING.
8. WARRANTY: MANUFACTURER AGREES TO REPAIR OR REPLACE FIRE-ALARM SYSTEM EQUIPMENT AND COMPONENTS THAT FAIL IN MATERIALS OR WORKMANSHIP WITHIN SPECIFIED WARRANTY PERIOD. ALL EQUIPMENT AND COMPONENTS NOT COVERED IN THE MAINTENANCE SERVICE AGREEMENT FOR FIVE YEARS FROM DATE OF SUBSTANTIAL COMPLETION.

B. FIRE-ALARM CONTROL UNIT
1. GENERAL REQUIREMENTS FOR FIRE-ALARM CONTROL UNIT:
   a. FIELD-PROGRAMMABLE, MICROPROCESSOR-BASED, MODULAR, POWER-LIMITED DESIGN WITH ELECTRONIC MODULES, COMPLYING WITH UL 864 AND LISTED AND LABELED BY AN NRTL.
1. PROVIDE COMMUNICATION BETWEEN THE FACP AND REMOTE CIRCUIT INTERFACE PANELS, ANNUNCIATORS, AND DISPLAYS.
2. THE FACP SHALL BE LISTED FOR CONNECTION TO A CENTRAL-STATION SIGNALING SYSTEM SERVICE.
3. PROVIDE NONVOLATILE MEMORY FOR SYSTEM DATABASE, LOGIC, AND OPERATING SYSTEM AND EVENT HISTORY. THE SYSTEM SHALL REQUIRE NO MANUAL INPUT TO INITIALIZE IN THE EVENT OF A COMPLETE POWER DOWN CONDITION. THE FACP SHALL PROVIDE A MINIMUM 500-EVENT HISTORY LOG.
   b. ADDRESSABLE INITIATION DEVICES THAT COMMUNICATE DEVICE IDENTITY AND STATUS.
1. SMOKE SENSORS SHALL ADDITIONALLY COMMUNICATE SENSITIVITY SETTING AND ALLOW FOR ADJUSTMENT OF SENSITIVITY AT FIRE-ALARM CONTROL UNIT.
2. TEMPERATURE SENSORS SHALL ADDITIONALLY TEST FOR AND COMMUNICATE THE SENSITIVITY RANGE OF THE DEVICE.
   c. ADDRESSABLE CONTROL CIRCUITS FOR OPERATION OF MECHANICAL EQUIPMENT.
2. ALPHANUMERIC DISPLAY AND SYSTEM CONTROLS: ARRANGED FOR INTERFACE BETWEEN HUMAN OPERATOR AT FIRE-ALARM CONTROL UNIT AND ADDRESSABLE SYSTEM COMPONENTS INCLUDING ANNUNCIATION AND SUPERVISION. DISPLAY ALARM, SUPERVISORY, AND COMPONENT STATUS MESSAGES AND THE PROGRAMMING AND CONTROL MENU.
3. INITIATING-DEVICE, NOTIFICATION-APPLIANCE, AND SIGNALING-LINE CIRCUITS: PATHWAY CLASS DESIGNATIONS: NFPA 72, CLASS B.
4. PRIMARY POWER: 24-V DC OBTAINED FROM 120-V AC SERVICE AND A POWER-SUPPLY MODULE. INITIATING DEVICES, NOTIFICATION APPLIANCES, SIGNALING LINES, TROUBLE SIGNALS, SUPERVISORY AND DIGITAL ALARM COMMUNICATOR TRANSMITTERS SHALL BE POWERED BY 24-V DC SOURCE. ALARM CURRENT DRAW OF ENTIRE FIRE-ALARM SYSTEM SHALL NOT EXCEED 80 PERCENT OF THE POWER-SUPPLY MODULE RATING.
5. SECONDARY POWER: 24-V DC SUPPLY SYSTEM WITH BATTERIES, AUTOMATIC BATTERY CHARGER, AND AUTOMATIC TRANSFER SWITCH. BATTERIES: SEALED LEAD CALCIUM.

C. MANUAL FIRE-ALARM BOXES
1. PROVIDE NON-CODED DOUBLE ACTION MANUAL STATIONS WHERE SHOWN ON THE DRAWINGS, TO BE FLUSH OR SURFACE MOUNTED AS REQUIRED. PULL STATION ACTIVATION SHALL PROVIDE ALARM INPUT TO THE SYSTEM AND ALARM OUTPUT FROM THE SYSTEM WITHIN FOUR (4) SECONDS. THE MANUAL STATION SHALL BE EQUIPPED WITH TERMINAL STRIP AND PRESSURE STYLE SCREW TERMINALS FOR THE CONNECTION OF FIELD WIRING. HOUSINGS SHALL BE MADE OF THERMOPLASTIC MATERIAL WITH RAISED FIRE ALARM LETTERING AND BE COLORED RED. STATIONS THAT REQUIRE THE BREAKING OF GLASS WILL NOT BE ACCEPTABLE. SURFACE MOUNTED STATIONS WHERE INDICATED ON THE DRAWINGS SHALL BE MOUNTED USING A MANUFACTURER'S PRESCRIBED MATCHING RED ENAMEL OUTLET BOX.

D. SYSTEM SMOKE DETECTORS
1. PROVIDE PHOTOELECTRIC TYPE. DETECTORS SHALL BE LISTED FOR USE AS OPEN AREA PROTECTIVE COVERAGE AND SHALL BE INSENSITIVE TO AIR VELOCITY CHANGES. THE SMOKE DETECTOR SHALL CONTAIN A MULTI-COLORED LED INDICATOR THAT WILL FLASH GREEN TO INDICATE THAT THE DETECTOR IS OPERATIONAL AND FLASH RED WHEN THE DETECTOR IS IN ALARM. THE DETECTOR SHALL BE CONTINUALLY SELF-TESTING AND SHALL BE DESIGNED TO ELIMINATE CALIBRATION ERRORS ASSOCIATED WITH FIELD CLEANING OF THE CHAMBER. DETECTOR SHALL TWIST LOCK INTO A BASE ASSEMBLY WITH SCREW CLAMP TERMINALS. DETECTOR ACTIVATION SHALL PROVIDE ALARM INPUT TO THE SYSTEM AND ALARM OUTPUT FROM THE SYSTEM WITHIN FOUR (4) SECONDS. THE DETECTOR SHALL SUPPORT THE USE OF A RELAY OR LED REMOTE INDICATOR. DETECTOR SPACING AND LOCATION SHALL BE IN ACCORDANCE WITH MANUFACTURER'S RECOMMENDATIONS, THE REQUIREMENTS OF NFPA 72, AND AS INDICATED. NO DETECTOR SHALL BE LOCATED CLOSER THAN 12 INCHES TO ANY PART OF ANY LIGHTING FIXTURE NOR SHALL ANY DETECTOR BE MOUNTED CLOSER THAT 36 INCHES TO ANY AHU AIR DIFFUSER.

E. HEAT DETECTORS
1. HEAT DETECTOR (SYSTEM) - THERMAL DETECTORS SHALL BE RATED AT 135 DEGREES FAHRENHEIT FIXED TEMPERATURE AND 15 DEGREES PER MINUTE RATE OF RISE OR GREATER. DETECTORS SHALL BE CONSTRUCTED TO COMPENSATE FOR THE THERMAL LAG INHERENT IN CONVENTIONAL TYPE DETECTORS DUE TO THE THERMAL MASS, AND ALARM AT THE SET POINT OF 135 DEGREES FAHRENHEIT. THE DETECTORS FURNISHED SHALL HAVE A LISTED SPACING FOR COVERAGE UP TO 2,500 SQUARE FEET AND SHALL BE INSTALLED ACCORDING TO THE REQUIREMENTS OF NFPA 72 FOR OPEN AREA COVERAGE.

F. NOTIFICATION APPLIANCES
1. NOTIFICATION APPLIANCES - THE HORN, STROBE OR HORN/STROBE APPLIANCE AS INDICATED ON THE DRAWINGS SHALL BE A SYNCHRONIZED TEMPORAL HORN WITH A SYNCHRONIZED STROBE LIGHT WITH MULTIPLE CANDELA TAPS TO MEET THE INTENDED APPLICATION. THE STROBE LIGHT TAPS SHALL BE ADJUSTABLE FOR 15, 30, 75, AND 110 CANDELA. THE STROBE SHALL FLASH AT A RATE BETWEEN 1/3 AND 3 FLASHES/SECOND. CEILING MOUNTED APPLIANCES SHALL BE RATED FOR THAT APPLICATION.

G. REMOTE ANNUNCIATOR
1. PROVIDE ANNUNCIATOR WITH FUNCTIONS TO MATCH THOSE OF FIRE-ALARM CONTROL UNIT FOR ALARM, SUPERVISORY, AND TROUBLE INDICATIONS. MANUAL SWITCHING FUNCTIONS SHALL MATCH THOSE OF FIRE-ALARM CONTROL UNIT, INCLUDING ACKNOWLEDGING, SILENCING, RESETTING, AND TESTING. MOUNTING SHALL BE FLUSH CABINET, NEMA 250, TYPE 1. ALPHANUMERIC DISPLAY AND LED INDICATING LIGHTS SHALL MATCH THOSE OF FIRE ALARM CONTROL UNIT. PROVIDE CONTROLS TO ACKNOWLEDGE, SILENCE, RESET, AND TEST FUNCTIONS FOR ALARM, SUPERVISORY, AND TROUBLE SIGNALS.

H. ADDRESSABLE INTERFACE DEVICE
1. PROVIDE ADDRESSABLE INTERFACE DEVICES WITH THE FOLLOWING FUNCTIONS:
   a. INCLUDE ADDRESS-SETTING MEANS ON THE MODULE.
   b. STORE AN INTERNAL IDENTIFYING CODE FOR CONTROL PANEL USE TO IDENTIFY THE MODULE TYPE.
   c. LISTED FOR CONTROLLING HVAC FAN MOTOR CONTROLLERS.
2. MONITOR MODULE: MICROELECTRONIC MODULE PROVIDING A SYSTEM ADDRESS FOR ALARM-INITIATING DEVICES FOR WIRED APPLICATIONS WITH NORMALLY OPEN CONTACTS.
3. INTEGRAL RELAY: CAPABLE OF PROVIDING A DIRECT SIGNAL TO ELEVATOR CONTROLLER TO INITIATE ELEVATOR RECALL OR TO CIRCUIT-BREAKER SHUNT TRIP FOR POWER SHUTDOWN. ALLOW THE CONTROL PANEL TO SWITCH THE RELAY CONTACTS ON COMMAND. HAVE A MINIMUM OF TWO NORMALLY OPEN AND TWO NORMALLY CLOSED CONTACTS AVAILABLE FOR FIELD WIRING.
4. CONTROL MODULE: OPERATE NOTIFICATION DEVICES. OPERATE SOLENOIDS FOR USE IN SPRINKLER SERVICE.

I. DIGITAL ALARM COMMUNICATOR TRANSMITTER
1. PROVIDE DIGITAL ALARM COMMUNICATOR TRANSMITTER ACCEPTABLE TO THE REMOTE CENTRAL STATION AND COMPLYING WITH UL 632.
2. FUNCTIONAL PERFORMANCE: UNIT SHALL RECEIVE AN ALARM, SUPERVISORY, OR TROUBLE SIGNAL FROM FIRE-ALARM CONTROL UNIT AND AUTOMATICALLY CAPTURE TWO TELEPHONE LINE(S) AND DIAL A PRESET NUMBER FOR A REMOTE CENTRAL STATION. WHEN CONTACT IS MADE WITH CENTRAL STATION(S), SIGNALS SHALL BE TRANSMITTED. IF SERVICE ON EITHER LINE IS INTERRUPTED FOR LONGER THAN 45 SECONDS, TRANSMITTER SHALL INITIATE A LOCAL TROUBLE SIGNAL AND TRANSMIT THE SIGNAL INDICATING LOSS OF TELEPHONE LINE TO THE REMOTE ALARM RECEIVING STATION OVER THE REMAINING LINE. TRANSMITTER SHALL AUTOMATICALLY REPORT TELEPHONE SERVICE RESTORATION TO THE CENTRAL STATION. IF SERVICE IS LOST ON BOTH TELEPHONE LINES, TRANSMITTER SHALL INITIATE THE LOCAL TROUBLE SIGNAL.
3. LOCAL FUNCTIONS AND DISPLAY AT THE DIGITAL ALARM COMMUNICATOR TRANSMITTER SHALL INCLUDE THE FOLLOWING:
   a. VERIFICATION THAT BOTH TELEPHONE LINES ARE AVAILABLE.
   b. PROGRAMMING DEVICE.
   c. LED DISPLAY.
   d. MANUAL TEST REPORT FUNCTION AND MANUAL TRANSMISSION CLEAR INDICATION.
   e. COMMUNICATIONS FAILURE WITH THE CENTRAL STATION OR FIRE-ALARM CONTROL UNIT.
4. SECONDARY POWER: INTEGRAL RECHARGEABLE BATTERY AND AUTOMATIC CHARGER.
5. SELF-TEST: CONDUCTED AUTOMATICALLY EVERY 24 HOURS WITH REPORT TRANSMITTED TO CENTRAL STATION.

J. PATHWAYS
1. PATHWAYS SHALL BE INSTALLED IN EMT. FIRE ALARM MC CABLE IS SUITABLE ONLY WHERE NOT EXPOSED.
2. FIRE ALARM BOXES SHALL BE PAINTED RED ENAMEL.
3. WIRING SHALL BE IN ACCORDANCE WITH THE REQUIREMENTS OF THE NATIONAL ELECTRIC CODE AND NFPA 72, AND ALL OTHER APPLICABLE STATE AND LOCAL CODES. THE CONTRACTOR SHALL PROVIDE, IN ACCORDANCE WITH MANUFACTURER'S INSTRUCTIONS, ALL WIRING, CONDUIT, AND OUTLET BOXES REQUIRED FOR THE ERECTION OF THE COMPLETE SYSTEM AS DESCRIBED HEREIN AND AS SHOWN ON THE DRAWINGS. COLOR-CODED WIRES SHALL BE USED.

K. CONNECTIONS
1. FOR FIRE-PROTECTION SYSTEMS RELATED TO DOORS IN FIRE-RATED WALLS AND PARTITIONS AND TO DOORS IN SMOKE PARTITIONS, COMPLY WITH REQUIREMENTS IN SECTION 087100 "DOOR HARDWARE." CONNECT HARDWARE AND DEVICES TO FIRE-ALARM SYSTEM. VERIFY THAT HARDWARE AND DEVICES ARE LISTED FOR USE WITH INSTALLED FIRE-ALARM SYSTEM BEFORE MAKING CONNECTIONS.
2. MAKE ADDRESSABLE CONNECTIONS WITH A SUPERVISED INTERFACE DEVICE TO THE FOLLOWING DEVICES AND SYSTEMS. INSTALL THE INTERFACE DEVICE LESS THAN 36 INCHES FROM THE DEVICE CONTROLLED. MAKE AN ADDRESSABLE CONFIRMATION CONNECTION WHEN SUCH FEEDBACK IS AVAILABLE AT THE DEVICE OR SYSTEM BEING CONTROLLED.
   a. SMOKE DAMPERS IN AIR DUCTS OF DESIGNATED HVAC DUCT SYSTEMS.
   b. MAGNETICALLY HELD-OPEN DOORS.
   c. ELECTRONICALLY LOCKED DOORS AND ACCESS GATES.
   d. ALARM-INITIATING CONNECTION TO ELEVATOR RECALL SYSTEM AND COMPONENTS.
   e. ALARM-INITIATING CONNECTION TO ACTIVATE EMERGENCY LIGHTING CONTROL.
   f. ALARM-INITIATING CONNECTION TO ACTIVATE EMERGENCY SHUTOFFS FOR GAS AND FUEL SUPPLIES.
   g. SUPERVISORY CONNECTIONS AT VALVE SUPERVISORY SWITCHES.
   h. SUPERVISORY CONNECTIONS AT LOW-AIR-PRESSURE SWITCH OF EACH DRY-PIPE SPRINKLER SYSTEM.
   i. SUPERVISORY CONNECTIONS AT ELEVATOR SHUNT-TRIP BREAKER.
   j. SUPERVISORY CONNECTIONS AT FIRE-EXTINGUISHER LOCATIONS.
3. GROUND FIRE-ALARM CONTROL UNIT AND ASSOCIATED CIRCUITS; COMPLY WITH IEEE 1100. INSTALL A GROUND WIRE FROM MAIN SERVICE GROUND TO FIRE-ALARM CONTROL UNIT.

L. EQUIPMENT INSTALLATION
1. COMPLY WITH NFPA 72, NFPA 101, AND REQUIREMENTS OF AUTHORITIES HAVING JURISDICTION FOR INSTALLATION AND TESTING OF FIRE-ALARM EQUIPMENT. INSTALL ALL ELECTRICAL WIRING TO COMPLY WITH REQUIREMENTS IN NFPA 70 INCLUDING, BUT NOT LIMITED TO, ARTICLE 760, "FIRE ALARM SYSTEMS."
2. CONNECTING TO EXISTING EQUIPMENT: VERIFY THAT EXISTING FIRE-ALARM SYSTEM IS OPERATIONAL BEFORE MAKING CHANGES OR CONNECTIONS.
3. INSTALL WALL-MOUNTED EQUIPMENT, WITH TOPS OF CABINETS NOT MORE THAN 78 INCHES ABOVE THE FINISHED FLOOR.
4. MANUAL FIRE-ALARM BOXES:
   a. INSTALL MANUAL FIRE-ALARM BOX IN THE NORMAL PATH OF EGRESS WITHIN 60 INCHES OF THE EXIT DOORWAY.
   b. MOUNT MANUAL FIRE-ALARM BOX ON A BACKGROUND OF A CONTRASTING COLOR.
   c. THE OPERABLE PART OF MANUAL FIRE-ALARM BOX SHALL BE BETWEEN 42 INCHES AND 48 INCHES ABOVE FLOOR LEVEL. ALL DEVICES SHALL BE MOUNTED AT THE SAME HEIGHT UNLESS OTHERWISE INDICATED.
5. SMOKE- OR HEAT-DETECTOR SPACING: COMPLY WITH NFPA 72.
6. DUCT SMOKE DETECTORS: COMPLY WITH NFPA 72 AND NFPA 90A. INSTALL SAMPLING TUBES SO THEY EXTEND THE FULL WIDTH OF DUCT. TUBES MORE THAN 36 INCHES LONG SHALL BE SUPPORTED AT BOTH ENDS. REFER TO MECHANICAL DRAWINGS FOR INSTALLATION LOCATION. LOCATE A MINIMUM OF 3' FROM ANY DIFFUSER.
7. SINGLE-STATION SMOKE DETECTORS: WHERE MORE THAN ONE SMOKE ALARM IS INSTALLED WITHIN A DWELLING OR SUITE, THEY SHALL BE CONNECTED SO THAT THE OPERATION OF ANY SMOKE ALARM CAUSES THE ALARM IN ALL SMOKE ALARMS TO SOUND. LOCATE A MINIMUM OF 3' FROM ANY DIFFUSER.
8. REMOTE STATUS AND ALARM INDICATORS: INSTALL IN A VISIBLE LOCATION NEAR EACH SMOKE DETECTOR, SPRINKLER WATER-FLOW SWITCH, AND VALVE-TAMPER SWITCH THAT IS NOT READILY VISIBLE FROM NORMAL VIEWING POSITION.
9. AUDIBLE ALARM-INDICATING DEVICES: INSTALL NOT LESS THAN 6 INCHES BELOW THE CEILING. INSTALL BELLS AND HORNS ON FLUSH-MOUNTED BACK BOXES WITH THE DEVICE-OPERATING MECHANISM CONCEALED BEHIND A GRILLE. INSTALL ALL DEVICES AT THE SAME HEIGHT UNLESS OTHERWISE INDICATED.
10. VISIBLE ALARM-INDICATING DEVICES: INSTALL ADJACENT TO EACH ALARM BELL OR ALARM HORN AND AT LEAST 6 INCHES BELOW THE CEILING. INSTALL ALL DEVICES AT THE SAME HEIGHT UNLESS OTHERWISE INDICATED.
11. DEVICE LOCATION-INDICATING LIGHTS: LOCATE IN PUBLIC SPACE NEAR THE DEVICE THEY MONITOR.
12. THE COMPLETED FIRE ALARM SYSTEM SHALL BE FULLY TESTED IN ACCORDANCE WITH NFPA 72, AND LOCAL FIRE DEPARTMENT REQUIREMENTS, BY THE INSTALLER, AND IN THE PRESENCE OF THE OWNERS REPRESENTATIVE AND THE LOCAL FIRE MARSHALL. UPON COMPLETION OF A SUCCESSFUL TEST, THE INSTALLER SHALL SO CERTIFY IN WRITING TO THE OWNER AND GENERAL CONTRACTOR. TEST CONDUCTORS FOR SHORT CIRCUITS USING AN INSULATION-TESTING DEVICE, INDICATING AND INITIATING CIRCUITS FOR PROPER SIGNAL TRANSMISSION UNDER OPEN CIRCUIT CONDITIONS, INDICATING AND INITIATING CIRCUITS FOR PROPER ALARM OPERATION AND RESPONSE AND ANNUNCIATION AT THE MAIN FIRE ALARM CONTROL PANEL, AND NEW SYSTEMS FOR SPECIFIED FUNCTIONS ACCORDING TO THIS SPECIFICATION
13. REACCEPTANCE TESTING: PERFORM REACCEPTANCE TESTING TO VERIFY THE PROPER OPERATION OF ADDED OR REPLACED DEVICES AND APPLIANCES.
14. FIRE-ALARM SYSTEM WILL BE CONSIDERED DEFECTIVE IF IT DOES NOT PASS TESTS AND INSPECTIONS.
15. TRAIN OWNER'S MAINTENANCE PERSONNEL TO ADJUST, OPERATE, AND MAINTAIN FIRE-ALARM SYSTEM.

VILLAGE OF OAK PARK
CONSTRUCTION DOCUMENT(S)
REVIEWED FOR COMPLIANCE
KEEP A PRINTED APPROVED COPY OF THE PLANS ON SITE AT ALL TIMES FOR CONTRACTORS AND INSPECTORS

625 W Adams Street – 19th Floor
Chicago, IL 60661
312.320.3668

LICENSED PROFESSIONAL ENGINEER
ALEXANDER G. RADKOFF
062-073334
OF ILLINOIS

DESIGN FIRM LIC. NO: 184008703-002
DESIGN FIRM LIC. NO. EXP : 04.30.2027
ILLINOIS LICENCE NUMBER: 062.073334
LIC. EXP.: 11.30. 2025

1144 Lake Street, LLC

BASE BUILDING MECHANICAL RENOVATIONS

1144 W LAKE ST
OAK PARK, IL 60301

NO.	DESCRIPTION	DATE
2	PERMIT REVISION 1	09/19/2025
1	ISSUED FOR PERMIT	08/25/2025

JOB NO.: 25.068

SCALE: AS SHOWN

TITLE: ELECTRICAL SPECIFICATIONS

SHEET: E0.6

9/24/2025 4:52:45 PM

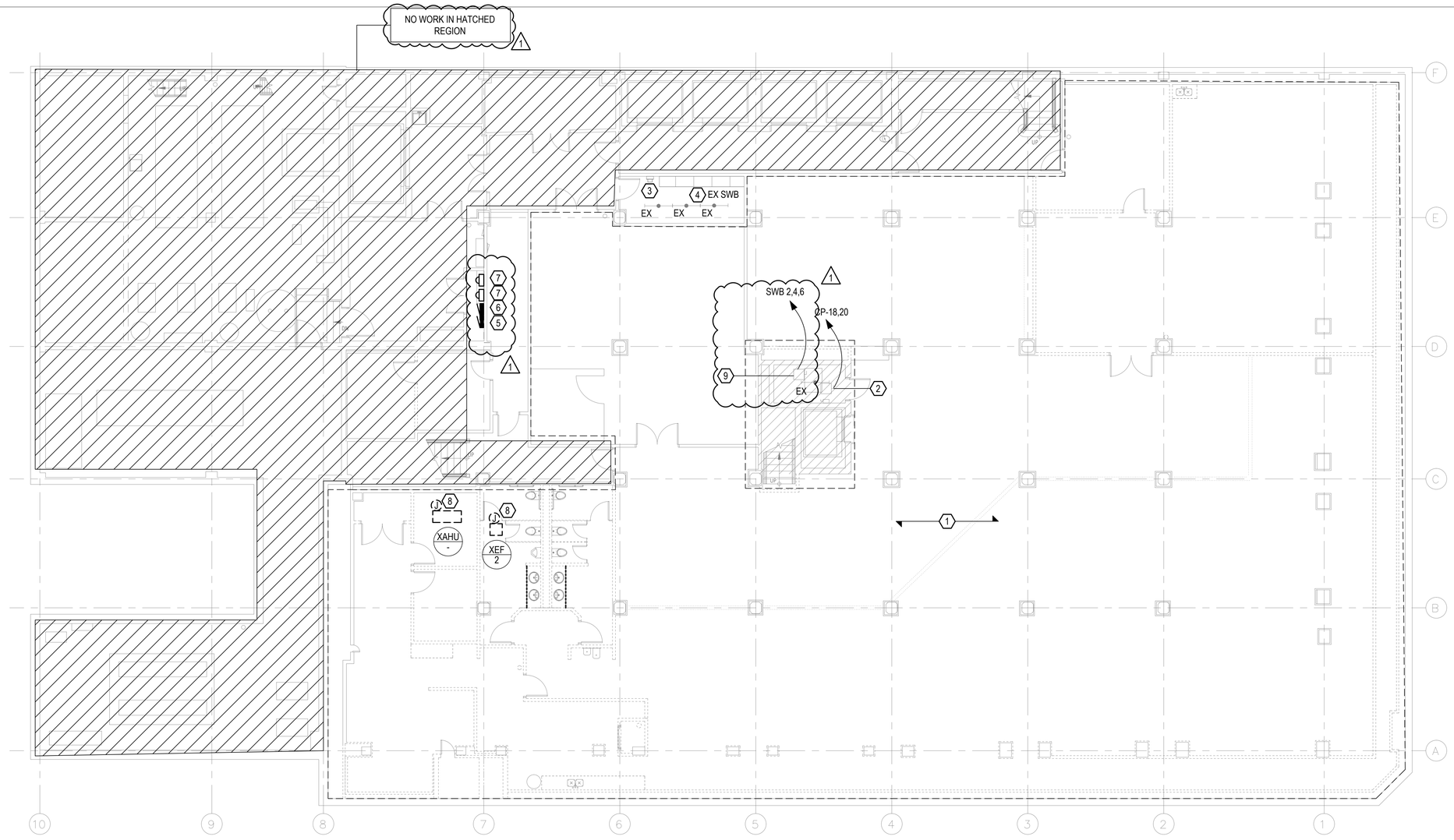

1 E1.1 BASEMENT FLOOR ELECTRICAL DEMOLITION PLAN

1/8" = 1'-0"

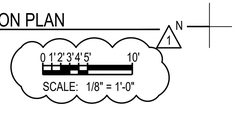

ELECTRICAL DEMOLITION GENERAL NOTES:

1. ELECTRICAL DISTRIBUTION EQUIPMENT IS EXISTING TO REMAIN, UNLESS OTHERWISE NOTED.
2. FIXTURES AND DEVICES NOTED WITH "EX" ARE EXISTING TO REMAIN. MAINTAIN EXISTING CIRCUITRY UNLESS OTHERWISE NOTED ON NEW WORK PLANS.
3. ALL HOLES IN WALLS, COLUMN ENCLOSURES, CEILINGS AND FLOORS FROM CONDUIT PENETRATIONS, JUNCTION BOXES, OR WIRING DEVICES SHALL BE PATCHED AND PAINTED PER THE ARCHITECT. RATED PARTITIONS SHALL BE FIREPROOFED TO MAINTAIN THE EXISTING FIRE RATING.
4. FIXTURES AND DEVICES ON WALLS THAT ARE SCHEDULED FOR DEMOLITION, WHETHER REPRESENTED ON THIS PLAN OR NOT, SHALL BE DISCONNECTED AND REMOVED. INTERCEPT AND EXTEND CIRCUITS AS REQUIRED TO MAINTAIN CONTINUITY OF POWER TO EXISTING DEVICES.
5. FIXTURES AND DEVICES ON WALLS THAT ARE SCHEDULED AS EXISTING TO REMAIN MAY NOT BE REPRESENTED ON THIS PLAN. ELECTRICAL CONTRACTOR SHALL FIELD VERIFY AND CONSULT WITH ARCHITECT AND OWNER TO DETERMINE IF DEVICES NEED TO BE REMOVED.
6. LIGHTING FIXTURES SCHEDULED FOR DEMOLITION SHALL BE DISCONNECTED AND SALVAGED FOR EVALUATION BY OWNER. OWNER SHALL HAVE FIRST RIGHT TO ALL FIXTURES BEING DEMOLISHED. ELECTRICAL CONTRACTOR SHALL DISCARD ALL FIXTURES NOT SALVAGED BY OWNER.

   MAINTAIN EXISTING LIGHTING CIRCUIT(S) SERVING THIS **FLOOR / SPACE**. DEMOLISH TO A POINT PRACTICAL FOR EXTENSION TO NEW LIGHTING FIXTURE LAYOUT. REFER TO NEW WORK LIGHTING PLAN FOR LOCATIONS OF NEW LIGHTING FIXTURES.
8. MAINTAIN EXISTING RECEPTACLE CIRCUIT(S) SERVING THIS **FLOOR / SPACE**. DEMOLISH TO A POINT PRACTICAL FOR EXTENSION TO NEW RECEPTACLE LAYOUT. REFER TO NEW WORK POWER PLAN FOR LOCATIONS OF NEW RECEPTACLES.

ELECTRICAL DEMOLITION KEY NOTES: (1)

1. REMOVE EXISTING LIGHT FIXTURES AND ASSOCIATED LIGHTING CONTROL SWITCHES WITHIN BOUNDED REGION, AND HAND OVER TO THE OWNER. PRESERVE THE EXISTING LIGHTING BRANCH POWER WIRING AND CONDUITS FOR CONNECTION TO THE NEW LIGHT FIXTURES TO BE INSTALLED. DISCONNECT AND REMOVE EXISTING RECEPTACLES WITHIN BOUNDED REGION. PRESERVE EXISTING BRANCH CIRCUIT FOR CONNECTION TO NEW RECEPTACLES.
2. EXISTING FEEDER FOR ELEVATOR PANEL TO BE DISCONNECTED FROM EXISTING BRANCH CIRCUIT AND PANEL AND SHALL BE RE-FED TO NEW CIRCUIT BREAKER AT PANEL INDICATED IN NEW WORK PLANS.
3. EXISTING UTILITY METER TO REMAIN.
4. EXISTING 800A 208/120V 3PH-4W SWITCHBOARD AND PANELBOARDS SERVING BASEMENT/FIRST FLOOR TENANT TO REMAIN.
5. EXISTING PANEL CDP-7 AND ALL ASSOCIATED BRANCH CIRCUITING/FEEDERS AND UPSTREAM FEEDER TO BE DEMOLISHED IN ITS ENTIRETY. FEEDER SHALL BE DEMOLISHED BACK TO MAIN SWITCHGEAR IN MAIN ELECTRIC ROOM AND MADE SAFE.
6. EXISTING PANELBOARD AND ALL ASSOCIATED BRANCH CIRCUITING/FEEDERS AND UPSTREAM FEEDER TO BE DEMOLISHED IN ITS ENTIRETY. FEEDER SHALL BE DEMOLISHED BACK TO MAIN SWITCHGEAR IN MAIN ELECTRIC ROOM AND MADE SAFE.
7. EXISTING UTILITY METER SHALL BE DEMOLISHED IN ITS ENTIRETY. OWNER AND EC SHALL COORDINATE WITH UTILITY COMPANY TO DEACTIVATE ACCOUNT AND SHALL RECEIVE PERMISSION FROM UTILITY COMPANY TO DEMOLISH PRIOR TO REMOVAL.
8. EXISTING POWER AND JUNCTION BOX FOR EXISTING MECHANICAL EQUIPMENT SHALL BE DEMOLISHED IN ITS ENTIRETY BACK TO ASSOCIATED BRANCH CIRCUIT AT PANELBOARD. CIRCUIT BREAKER SHALL BE MADE SPARE FOR FUTURE USE BY TENANT.
9. EXISTING FEEDER FOR ELEVATOR PANEL TO BE DISCONNECTED FROM EXISTING BRANCH CIRCUIT AND PANEL AND SHALL BE RE-FED TO NEW BREAKER AT SWITCHBOARD INDICATED IN NEW WORK PLANS.

VILLAGE OF OAK PARK
CONSTRUCTION DOCUMENT(S)
REVIEWED FOR COMPLIANCE
KEEP A PRINTED APPROVED COPY OF THE PLANS ON SITE AT ALL TIMES FOR CONTRACTORS AND INSPECTORS

625 W Adams Street – 19th Floor
Chicago, IL 60661
312.320.3668

LICENSED PROFESSIONAL ENGINEER
ALEXANDER G. RADKOFF
062-073334
OF ILLINOIS

DESIGN FIRM LIC. NO: 184008703-002
DESIGN FIRM LIC. NO. EXP.: 04.30.2027
ILLINOIS LICENCE NUMBER: 062.073334
LIC. EXP.: 11.30. 2025

1144 Lake Street, LLC

BASE BUILDING MECHANICAL RENOVATIONS

1144 W LAKE ST
OAK PARK, IL 60301

NO.	DESCRIPTION	DATE
1	PERMIT REVISION 1	09/19/2025
1	ISSUED FOR PERMIT	08/25/2025

JOB NO.: 25.068

SCALE: AS SHOWN

TITLE: ELECTRICAL BASEMENT FLOOR DEMO PLAN

SHEET: E1.1

8/24/2025 4:52:45 PM

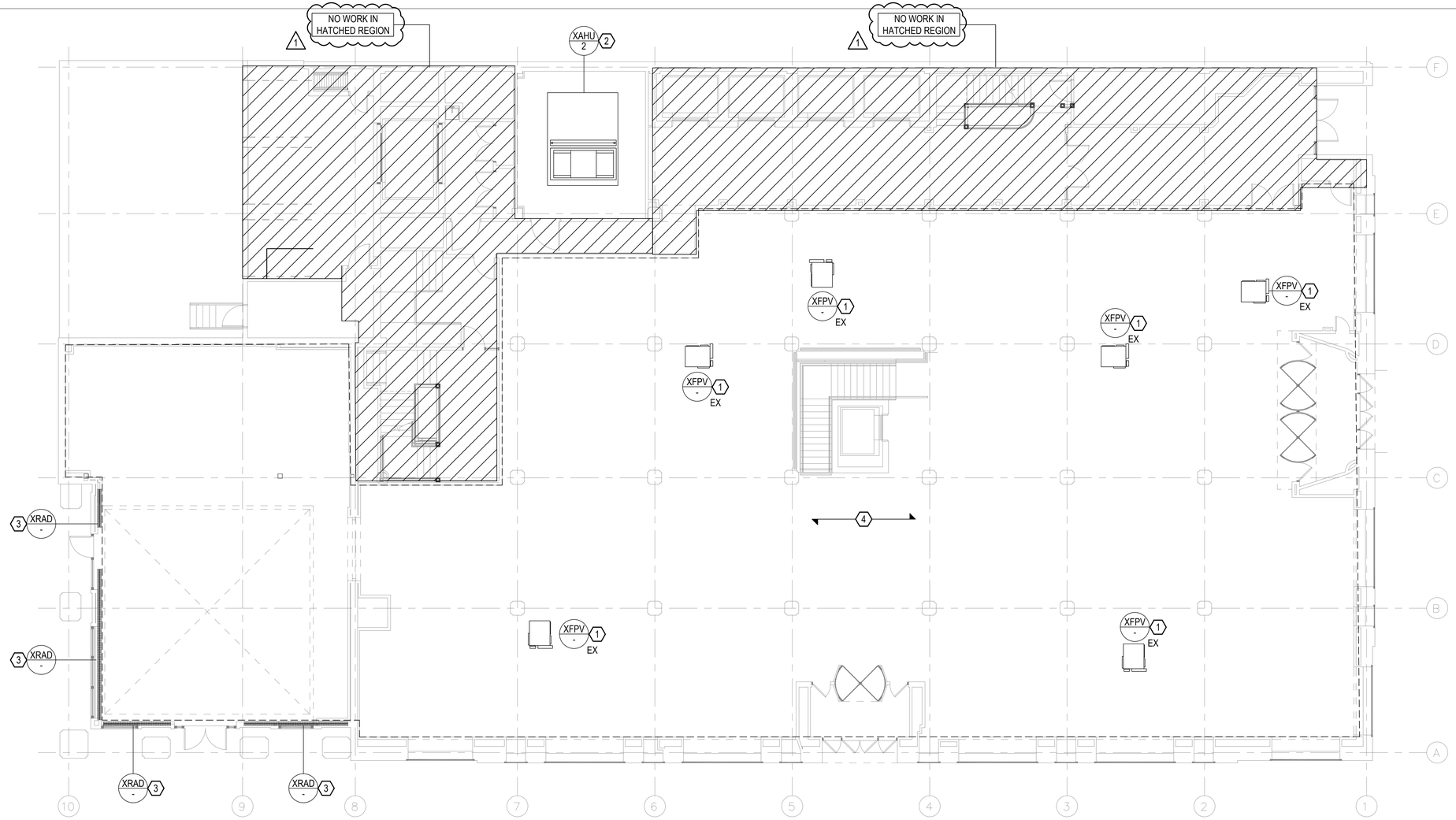

1 E1.2 GROUND FLOOR ELECTRICAL DEMOLITION PLAN
1/8" = 1'-0"

N

0 1' 2' 3' 4' 5' 10'
SCALE: 1/8" = 1'-0"

ELECTRICAL DEMOLITION GENERAL NOTES:

1. ELECTRICAL DISTRIBUTION EQUIPMENT IS EXISTING TO REMAIN, UNLESS OTHERWISE NOTED.
2. FIXTURES AND DEVICES NOTED WITH "EX" ARE EXISTING TO REMAIN. MAINTAIN EXISTING CIRCUITRY UNLESS OTHERWISE NOTED ON NEW WORK PLANS.
3. ALL HOLES IN WALLS, COLUMN ENCLOSURES, CEILINGS AND FLOORS FROM CONDUIT PENETRATIONS, JUNCTION BOXES, OR WIRING DEVICES SHALL BE PATCHED AND PAINTED PER THE ARCHITECT. RATED PARTITIONS SHALL BE FIREPROOFED TO MAINTAIN THE EXISTING FIRE RATING.
4. FIXTURES AND DEVICES ON WALLS THAT ARE SCHEDULED FOR DEMOLITION, WHETHER REPRESENTED ON THIS PLAN OR NOT, SHALL BE DISCONNECTED AND REMOVED. INTERCEPT AND EXTEND CIRCUITS AS REQUIRED TO MAINTAIN CONTINUITY OF POWER TO EXISTING DEVICES.
5. FIXTURES AND DEVICES ON WALLS THAT ARE SCHEDULED AS EXISTING TO REMAIN MAY NOT BE REPRESENTED ON THIS PLAN. ELECTRICAL CONTRACTOR SHALL FIELD VERIFY AND CONSULT WITH ARCHITECT AND OWNER TO DETERMINE IF DEVICES NEED TO BE REMOVED.
6. LIGHTING FIXTURES SCHEDULED FOR DEMOLITION SHALL BE DISCONNECTED AND SALVAGED FOR EVALUATION BY OWNER. OWNER SHALL HAVE FIRST RIGHT TO ALL FIXTURES BEING DEMOLISHED. ELECTRICAL CONTRACTOR SHALL DISCARD ALL FIXTURES NOT SALVAGED BY OWNER.
7. MAINTAIN EXISTING LIGHTING CIRCUIT(S) SERVING THIS **FLOOR / SPACE**. DEMOLISH TO A POINT PRACTICAL FOR EXTENSION TO NEW LIGHTING FIXTURE LAYOUT. REFER TO NEW WORK LIGHTING PLAN FOR LOCATIONS OF NEW LIGHTING FIXTURES.
8. MAINTAIN EXISTING RECEPTACLE CIRCUIT(S) SERVING THIS **FLOOR / SPACE**. DEMOLISH TO A POINT PRACTICAL FOR EXTENSION TO NEW RECEPTACLE LAYOUT. REFER TO NEW WORK POWER PLAN FOR LOCATIONS OF NEW RECEPTACLES.

ELECTRICAL DEMOLITION KEY NOTES: (X)

1. EXISTING POWER FOR FAN POWERED TERMINAL UNIT TO REMAIN.
2. EXISTING POWER FOR AIR HANDLING UNIT TO REMAIN.
3. EXISTING POWER FOR ELECTRIC BASEBOARD RADIATOR TO REMAIN.
4. REMOVE EXISTING LIGHT FIXTURES AND ASSOCIATED LIGHTING CONTROL SWITCHES WITHIN BOUNDED REGION, AND HAND OVER TO THE OWNER. PRESERVE THE EXISTING LIGHTING BRANCH POWER WIRING AND CONDUITS FOR CONNECTION TO THE NEW LIGHT FIXTURES TO BE INSTALLED. DISCONNECT AND REMOVE EXISTING RECEPTACLES WITHIN BOUNDED REGION. PRESERVE EXISTING BRANCH CIRCUIT FOR CONNECTION TO NEW RECEPTACLES.

VILLAGE OF OAK PARK
CONSTRUCTION DOCUMENT(S)
REVIEWED FOR COMPLIANCE
KEEP A PRINTED APPROVED COPY OF THE PLANS ON SITE AT ALL TIMES FOR CONTRACTORS AND INSPECTORS

625 W Adams Street – 19th Floor
Chicago, IL 60661
312.320.3668

LICENSED PROFESSIONAL ENGINEER
ALEXANDER G. RADKOFF
062-073334
OF ILLINOIS

DESIGN FIRM LIC. NO: 184008703-002
DESIGN FIRM LIC. NO. EXP.: 04.30.2027
ILLINOIS LICENCE NUMBER: 062.073334
LIC. EXP.: 11.30. 2025

1144 Lake Street, LLC

BASE BUILDING MECHANICAL RENOVATIONS

1144 W LAKE ST
OAK PARK, IL 60301

NO.	DESCRIPTION	DATE
1	PERMIT REVISION 1	09/19/2025
1	ISSUED FOR PERMIT	08/28/2025

JOB NO.: 25.068

SCALE: AS SHOWN

TITLE: ELECTRICAL GROUND FLOOR DEMO PLAN

SHEET: E1.2

8/24/2025 4:52:45 PM

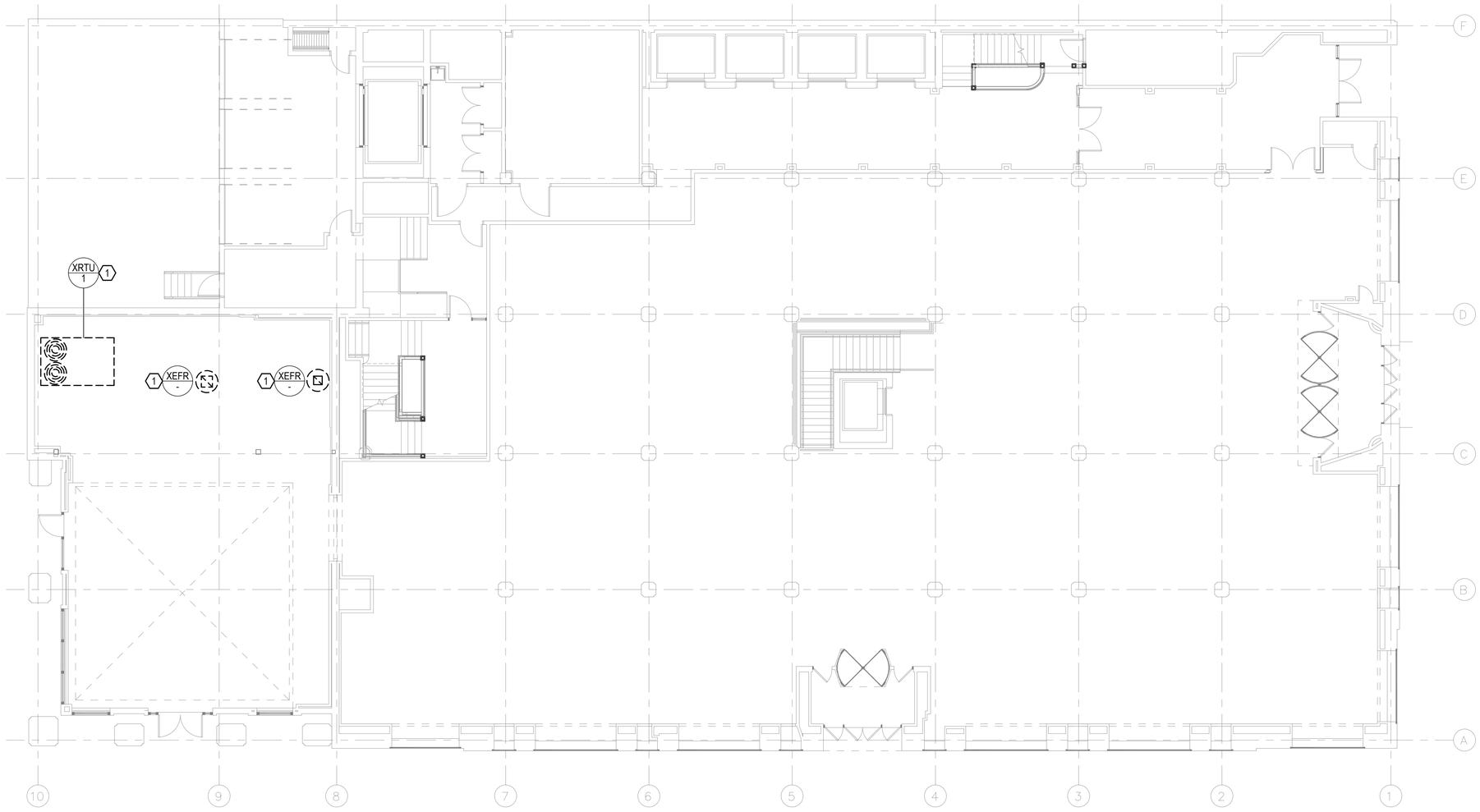

1 E1.3 LOW ROOF ELECTRICAL DEMOLITION POWER PLAN
1/8" = 1'-0"

N

0 1' 2' 3' 4' 5' 10'
SCALE: 1/8" = 1'-0"

ELECTRICAL DEMOLITION GENERAL NOTES:

1. ELECTRICAL DISTRIBUTION EQUIPMENT IS EXISTING TO REMAIN, UNLESS OTHERWISE NOTED.
2. FIXTURES AND DEVICES NOTED WITH "EX" ARE EXISTING TO REMAIN. MAINTAIN EXISTING CIRCUITRY UNLESS OTHERWISE NOTED ON NEW WORK PLANS.
3. ALL HOLES IN WALLS, COLUMN ENCLOSURES, CEILINGS AND FLOORS FROM CONDUIT PENETRATIONS, JUNCTION BOXES, OR WIRING DEVICES SHALL BE PATCHED AND PAINTED PER THE ARCHITECT. RATED PARTITIONS SHALL BE FIREPROOFED TO MAINTAIN THE EXISTING FIRE RATING.
4. FIXTURES AND DEVICES ON WALLS THAT ARE SCHEDULED FOR DEMOLITION, WHETHER REPRESENTED ON THIS PLAN OR NOT, SHALL BE DISCONNECTED AND REMOVED. INTERCEPT AND EXTEND CIRCUITS AS REQUIRED TO MAINTAIN CONTINUITY OF POWER TO EXISTING DEVICES.
5. FIXTURES AND DEVICES ON WALLS THAT ARE SCHEDULED AS EXISTING TO REMAIN MAY NOT BE REPRESENTED ON THIS PLAN. ELECTRICAL CONTRACTOR SHALL FIELD VERIFY AND CONSULT WITH ARCHITECT AND OWNER TO DETERMINE IF DEVICES NEED TO BE REMOVED.
6. LIGHTING FIXTURES SCHEDULED FOR DEMOLITION SHALL BE DISCONNECTED AND SALVAGED FOR EVALUATION BY OWNER. OWNER SHALL HAVE FIRST RIGHT TO ALL FIXTURES BEING DEMOLISHED. ELECTRICAL CONTRACTOR SHALL DISCARD ALL FIXTURES NOT SALVAGED BY OWNER.
7. MAINTAIN EXISTING LIGHTING CIRCUIT(S) SERVING THIS **FLOOR / SPACE**. DEMOLISH TO A POINT PRACTICAL FOR EXTENSION TO NEW LIGHTING FIXTURE LAYOUT. REFER TO NEW WORK LIGHTING PLAN FOR LOCATIONS OF NEW LIGHTING FIXTURES.
8. MAINTAIN EXISTING RECEPTACLE CIRCUIT(S) SERVING THIS **FLOOR / SPACE**. DEMOLISH TO A POINT PRACTICAL FOR EXTENSION TO NEW RECEPTACLE LAYOUT. REFER TO NEW WORK POWER PLAN FOR LOCATIONS OF NEW RECEPTACLES.

ELECTRICAL DEMOLITION KEY NOTES: (X)

1. EXISTING POWER AND JUNCTION BOX FOR EXISTING MECHANICAL EQUIPMENT SHALL BE DEMOLISHED IN ITS ENTIRETY BACK TO ASSOCIATED BRANCH CIRCUIT AT PANELBOARD OR SWITCHBOARD. CIRCUIT BREAKER SHALL BE MADE SPARE FOR FUTURE USE BY TENANT.

VILLAGE OF OAK PARK
CONSTRUCTION DOCUMENT(S)
REVIEWED FOR COMPLIANCE
KEEP A PRINTED APPROVED COPY OF THE PLANS ON SITE AT ALL TIMES FOR CONTRACTORS AND INSPECTORS

625 W Adams Street – 19th Floor
Chicago, IL 60661
312.320.3668

LICENSED PROFESSIONAL ENGINEER
ALEXANDER G. RADKOFF
062-073334
OF ILLINOIS

DESIGN FIRM LIC. NO: 184008703-002
DESIGN FIRM LIC. NO. EXP.: 04.30.2027
ILLINOIS LICENCE NUMBER: 062.073334
LIC. EXP.: 11.30. 2025

1144 Lake Street, LLC

BASE BUILDING MECHANICAL RENOVATIONS

1144 W LAKE ST
OAK PARK, IL 60301

NO.	DESCRIPTION	DATE
2	PERMIT REVISION 1	09/19/2025
1	ISSUED FOR PERMIT	08/25/2025

JOB NO.: 25.068

SCALE: AS SHOWN

TITLE: ELECTRICAL LOW ROOF DEMO PLAN

SHEET: E1.3

8/24/2025 4:52:45 PM

1 BASEMENT FLOOR LIGHTING PLAN
E2.1 1/8" = 1'-0"

N

0 1' 2' 3' 4' 5' 10'
SCALE: 1/8" = 1'-0"

ELECTRICAL GENERAL NOTES:

1. REFER TO ARCHITECTURAL DRAWINGS FOR CEILING TYPES AND EXACT LIGHTING FIXTURE LOCATIONS AND DIMENSIONAL INFORMATION.
2. FIRE STOP ALL FIRE RATED FLOORS, CEILINGS, AND WALLS AS REQUIRED BY CODE. PENETRATIONS INTO OR THROUGH FIRE RESISTANCE RATED WALLS SHALL COMPLY WITH IBC CHAPTER 7.
3. PROVIDE EXPANSION FITTINGS AS REQUIRED AT ALL EXPANSION JOINTS. COORDINATE WITH ARCHITECTURAL DRAWINGS.
4. FOLLOW ALL LOCAL AMENDMENTS OUTLINED IN OAK PARK MUNICIPAL CODE ORDINANCES.
5. TYPE IMC CONDUIT (EMT) SHALL BE USED IN ALL INTERIOR LOCATIONS, INCLUDING CIRCUITS CONCEALED WITHIN WALL AND CEILING CAVITIES AND EXPOSED CIRCUITS. EXPOSED CIRCUITS SHALL BE ROUTED PARALLEL AND PERPENDICULAR TO BUILDING STRUCTURE. EXPOSED CONDUIT SHALL BE PAINTED PER THE ARCHITECTURAL DRAWINGS.
6. RIGID METAL CONDUIT (RMC), INTERMEDIATE METAL CONDUIT (IMC) OR RIGID NON-METALLIC CONDUIT SHALL BE USED IN ALL CONCRETE AND UNDERGROUND INSTALLATIONS.
7. ALL CONDUCTORS USED FOR ELECTRIC SERVICE CONDUCTORS, SERVICE ENTRANCE CONDUCTORS, FEEDERS, CIRCUITS, GROUNDING ELECTRODES AND EQUIPMENT GROUNDS SHALL BE COPPER. ALUMINUM WIRING SHALL NOT BE PERMITTED.
8. TYPE AC, FC, FCC, IGS, MC, MI, NM, NMC, NMS,TC, SE/USE CABLING IS NOT PERMITTED FOR USE IN ANY LOCATIONS.
9. EC SHALL NOT HAVE MORE THAN THREE CURRENT CARRYING CONDUCTORS IN A CONDUIT WITHOUT DERATING AMPACITIES PER THE NEC. 1
10. EXIT SIGNS AND EMERGENCY WALL PACKS SHALL BE CIRCUITED TO AN UNSWITCHED HOT LEG OF THE LIGHTING CIRCUIT SERVING THE SPACE AHEAD OF LOCAL CONTROLS.
11. OCCUPANCY / VACANCY SENSORS HAVE BEEN LOCATED PER THE RECOMMENDED SPACING OF THE BASIS OF DESIGN PRODUCTS. THE EXACT LOCATIONS AND QUANTITY OF SENSORS SHALL BE VERIFIED BY THE MANUFACTURER FOR PRODUCTS SUBMITTED AS EQUALS.
12. CONTROL ZONE RELAY POWER PACKS ARE NOT SHOWN ON THESE DRAWINGS. PROVIDE COMPATIBLE POWER PACKS TO MEET DESIGN INTENT SHOWN ON DRAWINGS. 1
13. AUXILIARY GUTTERS UTILIZING MORE THAN 30 CURRENT CARRYING CONDUCTORS SHALL BE DERATED ACCORDING TO THE ADJUSTMENT FACTORS IN ARTICLE 310.15(B)(3)(A).

ELECTRICAL KEY NOTES: 1

1. BRANCH CIRCUIT POWER TO NEW LIGHTING FIXTURES SHALL BE FED FROM EXISTING BRANCH CIRCUIT POWER THAT SERVES EXISTING TO REMAIN LIGHTING FIXTURES. EXTEND EXISTING BRANCH CIRCUIT WIRING AND CONDUIT AS REQUIRED. EXISTING CONDUIT SHALL BE RE-UTILIZED WHERE POSSIBLE. CONDITION AND VIABILITY OF EXISTING CONDUIT SHALL BE VERIFIED PRIOR TO BID.

VILLAGE OF OAK PARK
CONSTRUCTION DOCUMENT(S)
REVIEWED FOR COMPLIANCE
KEEP A PRINTED APPROVED COPY OF THE PLANS ON SITE AT ALL TIMES FOR CONTRACTORS AND INSPECTORS

625 W Adams Street – 19th Floor
Chicago, IL 60661
312.320.3668

LICENSED PROFESSIONAL ENGINEER
ALEXANDER G. RADKOFF
062-073334
OF ILLINOIS

DESIGN FIRM LIC. NO: 184008703-002
DESIGN FIRM LIC. NO. EXP.: 04.30.2027
ILLINOIS LICENCE NUMBER: 062.073334
LIC. EXP.: 11.30. 2025

1144 Lake Street, LLC

BASE BUILDING MECHANICAL RENOVATIONS

1144 W LAKE ST
OAK PARK, IL 60301

NO.	DESCRIPTION	DATE
1	PERMIT REVISION 1	09/19/2025
1	ISSUED FOR PERMIT	08/25/2025

JOB NO.: 25.068

SCALE: AS SHOWN

TITLE: ELECTRICAL GROUND FLOOR LIGHTING PLAN

SHEET: E2.1

8/24/2025 4:52:45 PM

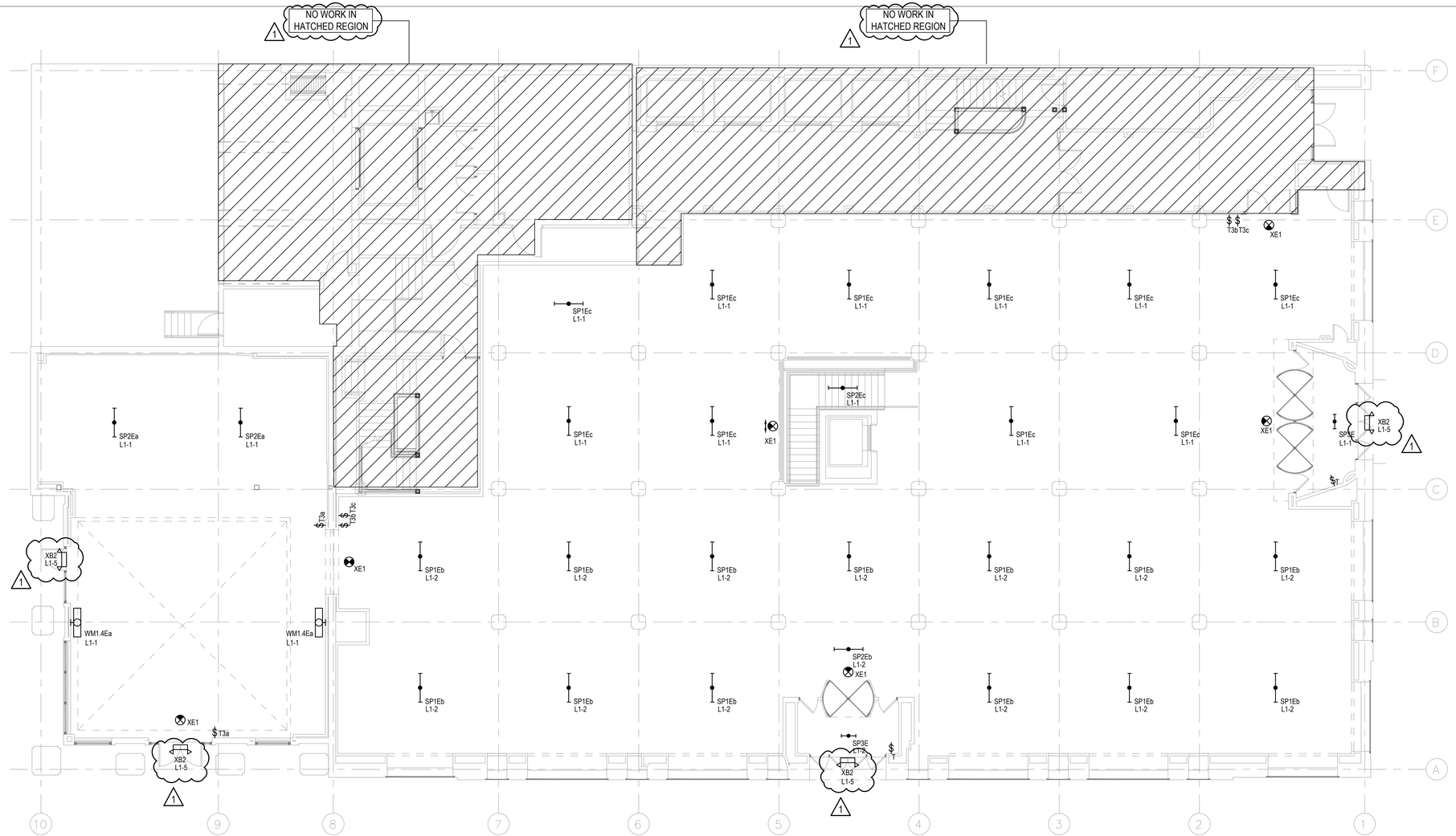

1 GROUND FLOOR LIGHTING PLAN
E2.2 1/8" = 1'-0"

N

0 1'2' 3'4'5' 10'
SCALE: 1/8" = 1'-0"

ELECTRICAL GENERAL NOTES:

1. REFER TO ARCHITECTURAL DRAWINGS FOR CEILING TYPES AND EXACT LIGHTING FIXTURE LOCATIONS AND DIMENSIONAL INFORMATION.
2. FIRE STOP ALL FIRE RATED FLOORS, CEILINGS, AND WALLS AS REQUIRED BY CODE. PENETRATIONS INTO OR THROUGH FIRE RESISTANCE RATED WALLS SHALL COMPLY WITH IBC CHAPTER 7.
3. PROVIDE EXPANSION FITTINGS AS REQUIRED AT ALL EXPANSION JOINTS. COORDINATE WITH ARCHITECTURAL DRAWINGS.
4. FOLLOW ALL LOCAL AMENDMENTS OUTLINED IN OAK PARK MUNICIPAL CODE ORDINANCES.
5. TYPE IMC CONDUIT (EMT) SHALL BE USED IN ALL INTERIOR LOCATIONS, INCLUDING CIRCUITS CONCEALED WITHIN WALL AND CEILING CAVITIES AND EXPOSED CIRCUITS. EXPOSED CIRCUITS SHALL BE ROUTED PARALLEL AND PERPENDICULAR TO BUILDING STRUCTURE. EXPOSED CONDUIT SHALL BE PAINTED PER THE ARCHITECTURAL DRAWINGS.
6. RIGID METAL CONDUIT (RMC), INTERMEDIATE METAL CONDUIT (IMC) OR RIGID NON-METALLIC CONDUIT SHALL BE USED IN ALL CONCRETE AND UNDERGROUND INSTALLATIONS.
7. ALL CONDUCTORS USED FOR ELECTRIC SERVICE CONDUCTORS, SERVICE ENTRANCE CONDUCTORS, FEEDERS, CIRCUITS, GROUNDING ELECTRODES AND EQUIPMENT GROUNDS SHALL BE COPPER. ALUMINUM WIRING SHALL NOT BE PERMITTED.
8. TYPE AC, FC, FCC, IGS, MC, MI, NM, NMC, NMS,TC, SE/USE CABLING IS NOT PERMITTED FOR USE IN ANY LOCATIONS.
9. EC SHALL NOT HAVE MORE THAN THREE CURRENT CARRYING CONDUCTORS IN A CONDUIT WITHOUT DERATING AMPACITIES PER THE NEC. 1
10. EXIT SIGNS SHALL BE CIRCUITED TO AN UNSWITCHED HOT LEG OF THE LIGHTING CIRCUIT SERVING THE SPACE AHEAD OF LOCAL CONTROLS.
11. OCCUPANCY / VACANCY SENSORS HAVE BEEN LOCATED PER THE RECOMMENDED SPACING OF THE BASIS OF DESIGN PRODUCTS. THE EXACT LOCATIONS AND QUANTITY OF SENSORS SHALL BE VERIFIED BY THE MANUFACTURER FOR PRODUCTS SUBMITTED AS EQUALS.
12. CONTROL ZONE RELAY POWER PACKS ARE NOT SHOWN ON THESE DRAWINGS. PROVIDE COMPATIBLE POWER PACKS TO MEET DESIGN INTENT SHOWN ON DRAWINGS.
13. AUXILIARY GUTTERS UTILIZING MORE THAN 30 CURRENT CARRYING CONDUCTORS SHALL BE DERATED ACCORDING TO THE ADJUSTMENT FACTORS IN ARTICLE 310.15(B)(3)(A). 1

VILLAGE OF OAK PARK
CONSTRUCTION DOCUMENT(S)
REVIEWED FOR COMPLIANCE
KEEP A PRINTED APPROVED COPY OF THE PLANS ON SITE AT ALL TIMES FOR CONTRACTORS AND INSPECTORS

625 W Adams Street – 19th Floor
Chicago, IL 60661
312.320.3668

LICENSED PROFESSIONAL ENGINEER
ALEXANDER G. RADKOFF
062-073334
OF ILLINOIS

DESIGN FIRM LIC. NO: 184008703-002
DESIGN FIRM LIC. NO. EXP : 04.30.2027
ILLINOIS LICENCE NUMBER: 062.073334
LIC. EXP.: 11.30. 2025

1144 Lake Street, LLC

BASE BUILDING MECHANICAL RENOVATIONS

1144 W LAKE ST
OAK PARK, IL 60301

NO.	DESCRIPTION	DATE
1	PERMIT REVISION 1	09/19/2025
1	ISSUED FOR PERMIT	08/26/2025

JOB NO.: 25.068

SCALE: AS SHOWN

TITLE: ELECTRICAL GROUND FLOOR LIGHTING PLAN

SHEET: E2.2

8/24/2025 4:52:45 PM

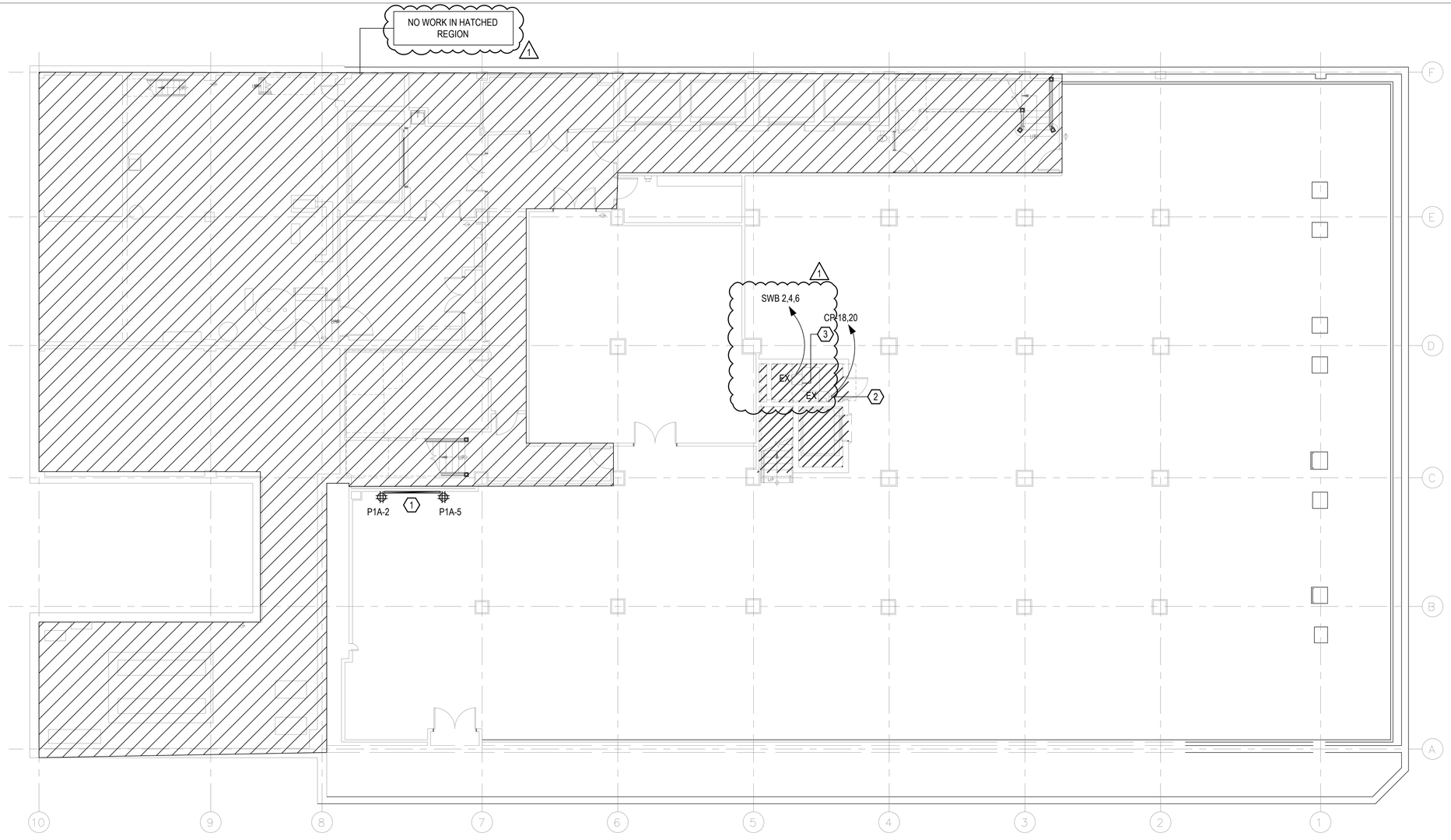

1 E3.1 BASEMENT FLOOR POWER PLAN
1/8" = 1'-0"

N

0 1'2' 3' 4' 5' 10'
SCALE: 1/8" = 1'-0"

ELECTRICAL GENERAL NOTES:

1. REFER TO ARCHITECTURAL DRAWINGS FOR CEILING TYPES AND EXACT LIGHTING FIXTURE LOCATIONS AND DIMENSIONAL INFORMATION.
2. FIRE STOP ALL FIRE RATED FLOORS, CEILINGS, AND WALLS AS REQUIRED BY CODE. PENETRATIONS INTO OR THROUGH FIRE RESISTANCE RATED WALLS SHALL COMPLY WITH IBC CHAPTER 7.
3. PROVIDE EXPANSION FITTINGS AS REQUIRED AT ALL EXPANSION JOINTS. COORDINATE WITH ARCHITECTURAL DRAWINGS.
4. FOLLOW ALL LOCAL AMENDMENTS OUTLINED IN OAK PARK MUNICIPAL CODE ORDINANCES.
5. TYPE IMC CONDUIT (EMT) SHALL BE USED IN ALL INTERIOR LOCATIONS, INCLUDING CIRCUITS CONCEALED WITHIN WALL AND CEILING CAVITIES AND EXPOSED CIRCUITS. EXPOSED CIRCUITS SHALL BE ROUTED PARALLEL AND PERPENDICULAR TO BUILDING STRUCTURE. EXPOSED CONDUIT SHALL BE PAINTED PER THE ARCHITECTURAL DRAWINGS.
6. RIGID METAL CONDUIT (RMC), INTERMEDIATE METAL CONDUIT (IMC) OR RIGID NON-METALLIC CONDUIT SHALL BE USED IN ALL CONCRETE AND UNDERGROUND INSTALLATIONS.
7. ALL CONDUCTORS USED FOR ELECTRIC SERVICE CONDUCTORS, SERVICE ENTRANCE CONDUCTORS, FEEDERS, CIRCUITS, GROUNDING ELECTRODES AND EQUIPMENT GROUNDS SHALL BE COPPER. ALUMINUM WIRING SHALL NOT BE PERMITTED.
8. TYPE AC, FC, FCC, IGS, MC, MI, NM, NMC, NMS,TC, SE/USE CABLING IS NOT PERMITTED FOR USE IN ANY LOCATIONS.
9. EC SHALL NOT HAVE MORE THAN THREE CURRENT CARRYING CONDUCTORS IN A CONDUIT WITHOUT DERATING AMPACITIES PER THE NEC.
10. EXIT SIGNS SHALL BE CIRCUITED TO AN UNSWITCHED HOT LEG OF THE EMERGENCY LIGHTING INVERTER CIRCUIT IN THE SPACE AHEAD OF LOCAL CONTROLS.
11. OCCUPANCY / VACANCY SENSORS HAVE BEEN LOCATED PER THE RECOMMENDED SPACING OF THE BASIS OF DESIGN PRODUCTS. THE EXACT LOCATIONS AND QUANTITY OF SENSORS SHALL BE VERIFIED BY THE MANUFACTURER FOR PRODUCTS SUBMITTED AS EQUALS.
12. CONTROL ZONE RELAY POWER PACKS ARE NOT SHOWN ON THESE DRAWINGS. PROVIDE COMPATIBLE POWER PACKS TO MEET DESIGN INTENT SHOWN ON DRAWINGS.
13. AUXILIARY GUTTERS UTILIZING MORE THAN 30 CURRENT CARRYING CONDUCTORS SHALL BE DERATED ACCORDING TO THE ADJUSTMENT FACTORS IN ARTICLE 310.15(B)(3)(A).

1

ELECTRICAL KEY NOTES: 1

1. PROVIDE TELEPHONE PLYWOOD BACKBOARD 3/4" X 8' X4', FIRE RETARDANT, BOTTOM AT 0'-4".
2. EXISTING DISCONNECT AND FEEDER FOR ELEVATOR PANEL AND POWER SHALL BE RE-FED TO NEW CIRCUIT IN PANEL CP. EXTEND AND SPLICE WIRING AND CONCEAL IN CONDUIT FOR EXTENSION OF FEEDER AS REQUIRED.
3. EXISTING DISCONNECT AND FEEDER FOR ELEVATOR PANEL AND POWER SHALL BE RE-FED TO NEW CIRCUIT AT EXISTING SWITCHBOARD SWB-1. EXTEND AND SPLICE WIRING AND CONCEAL IN CONDUIT FOR EXTENSION OF FEEDER AS REQUIRED.

1

VILLAGE OF OAK PARK
CONSTRUCTION DOCUMENT(S)
REVIEWED FOR COMPLIANCE
KEEP A PRINTED APPROVED COPY OF THE PLANS ON SITE AT ALL TIMES FOR CONTRACTORS AND INSPECTORS

625 W Adams Street – 19th Floor
Chicago, IL 60661
312.320.3668

LICENSED PROFESSIONAL ENGINEER
ALEXANDER G. RADKOFF
062-073334
OF ILLINOIS

DESIGN FIRM LIC. NO: 184008703-002
DESIGN FIRM LIC. NO. EXP : 04.30.2027
ILLINOIS LICENCE NUMBER: 062.073334
LIC. EXP.: 11.30. 2025

1144 Lake Street, LLC

BASE BUILDING MECHANICAL RENOVATIONS

1144 W LAKE ST
OAK PARK, IL 60301

NO.	DESCRIPTION	DATE
1	PERMIT REVISION 1	09/19/2025
1	ISSUED FOR PERMIT	08/28/2025

JOB NO.: 25.068

SCALE: AS SHOWN

TITLE: ELECTRICAL BASEMENT FLOOR POWER PLAN

SHEET: E3.1

8/24/2025 4:52:45 PM

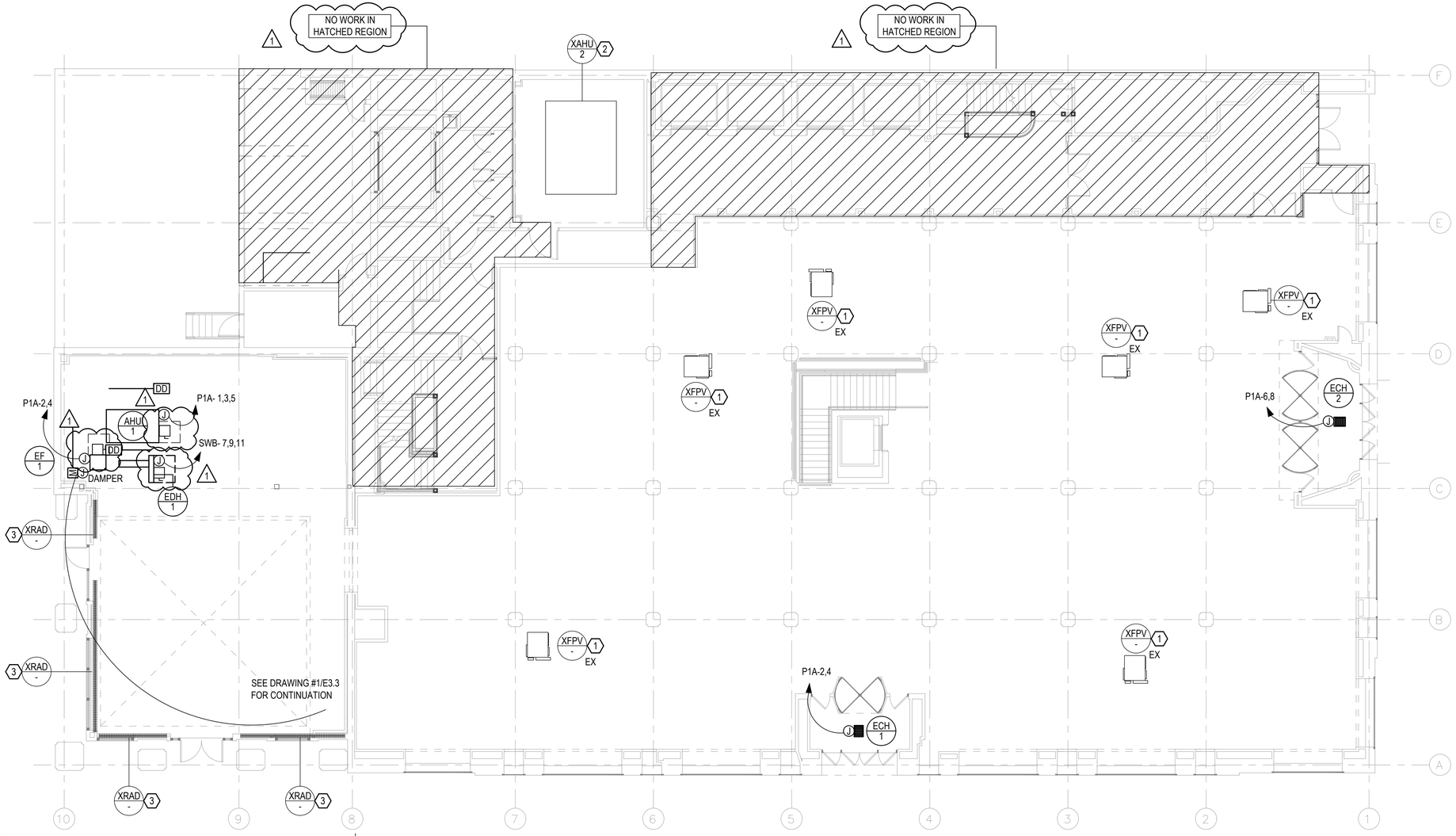

1 ELECTRICAL GROUND FLOOR POWER PLAN
E3.2 1/8" = 1'-0"

0 1' 2' 3' 4' 5' 10'
SCALE: 1/8" = 1'-0"

ELECTRICAL GENERAL NOTES:

1. FIRE STOP ALL FIRE RATED FLOORS, CEILINGS, AND WALLS AS REQUIRED BY CODE. PENETRATIONS INTO OR THROUGH FIRE RESISTANCE RATED WALLS SHALL COMPLY WITH IBC CHAPTER 7.
2. EC SHALL VERIFY ALL EXISTING RECEPTACLE LOCATIONS, FEEDER LOCATIONS AND ROUTING, JUNCTION BOXES, DISCONNECTS, POWER PANELS, RELAYS, AND ALL OTHER COMPONENTS OF THE ELECTRICAL SYSTEM PRIOR TO BID.
3. PROVIDE EXPANSION FITTINGS AS REQUIRED AT ALL EXPANSION JOINTS. COORDINATE WITH ARCHITECTURAL DRAWINGS.
4. FOLLOW ALL LOCAL AMENDMENTS OUTLINED IN OAK PARK MUNICIPAL CODE ORDINANCES.
5. TYPE IMC CONDUIT (EMT) SHALL BE USED IN ALL INTERIOR LOCATIONS, INCLUDING CIRCUITS CONCEALED WITHIN WALL AND CEILING CAVITIES AND EXPOSED CIRCUITS. EXPOSED CIRCUITS SHALL BE ROUTED PARALLEL AND PERPENDICULAR TO BUILDING STRUCTURE. EXPOSED CONDUIT SHALL BE PAINTED PER THE ARCHITECTURAL DRAWINGS.
6. RIGID METAL CONDUIT (RMC), INTERMEDIATE METAL CONDUIT (IMC) OR RIGID NON-METALLIC CONDUIT SHALL BE USED IN ALL CONCRETE AND UNDERGROUND INSTALLATIONS.
7. ALL CONDUCTORS USED FOR ELECTRIC SERVICE CONDUCTORS, SERVICE ENTRANCE CONDUCTORS, FEEDERS, CIRCUITS, GROUNDING ELECTRODES AND EQUIPMENT GROUNDS SHALL BE COPPER. ALUMINUM WIRING SHALL NOT BE PERMITTED.
8. TYPE AC, FC, FCC, IGS, MC, MI, NM, NMC, NMS,TC, SE/USE CABLING IS NOT PERMITTED FOR USE IN ANY LOCATIONS.
9. COORDINATE EXACT LOCATIONS OF MECHANICAL EQUIPMENT WITH DIVISION 23. UNLESS NOTED OTHERWISE, MECHANICAL EQUIPMENT DISCONNECTS AND VARIABLE FREQUENCY DRIVES SHALL BE FURNISHED BY DIVISION 23, INSTALLED AND WIRED BY EC. THESE DISCONNECTS HAVE NOT BEEN SHOWN ON THIS PLAN.
10. COORDINATE EXACT LOCATIONS OF PLUMBING EQUIPMENT WITH DIVISION 22. UNLESS NOTED OTHERWISE, PLUMBING EQUIPMENT DISCONNECTS SHALL BE FURNISHED, INSTALLED, AND WIRED BY EC.
11. EC SHALL NOT HAVE MORE THAN THREE CURRENT CARRYING CONDUCTORS IN A CONDUIT WITHOUT DERATING AMPACITIES PER THE NEC.
12. WHERE DEVICES ARE INCLUDED AND DIMENSIONED ON THE ARCHITECTURAL DRAWINGS, THOSE LOCATIONS SHALL GOVERN. WHERE DEVICES ARE OMITTED FROM THE ARCHITECTURAL DRAWINGS, INSTALL IN ACCORDANCE WITH THIS PLAN AND THE DEFAULT LOCATIONS IN THE ELECTRICAL SPECIFICATIONS. ALL DEVICES SHALL BE INSTALLED PER ADA. IT SHALL BE THE RESPONSIBILITY OF THE ELECTRICAL CONTRACTOR TO VERIFY EXACT DEVICE LOCATIONS. WHERE DEVICES ARE INSTALLED IN THE FIELD AND DIFFER FROM DESIGN DOCUMENT DIMENSIONS, IT IS THE RESPONSIBILITY OF THE CONTRACTOR TO CORRECT DEVICE LOCATIONS TO MATCH CONSTRUCTION DOCUMENTS, AT NO COST TO THE OWNER.
13. AUXILIARY GUTTERS UTILIZING MORE THAN 30 CURRENT CARRYING CONDUCTORS SHALL BE DERATED ACCORDING TO THE ADJUSTMENT FACTORS IN ARTICLE 310.15(B)(3)(A).

ELECTRICAL KEY NOTES: 1

1. EXISTING POWER FOR FAN POWERED TERMINAL UNIT TO REMAIN.
2. EXISTING POWER FOR AIR HANDLING UNIT TO REMAIN.
3. EXISTING POWER FOR ELECTRIC BASEBOARD RADIATOR TO REMAIN.

VILLAGE OF OAK PARK
CONSTRUCTION DOCUMENT(S)
REVIEWED FOR COMPLIANCE
KEEP A PRINTED APPROVED COPY OF THE PLANS ON SITE AT ALL TIMES FOR CONTRACTORS AND INSPECTORS

625 W Adams Street – 19th Floor
Chicago, IL 60661
312.320.3668

LICENSED PROFESSIONAL ENGINEER
ALEXANDER G. RADKOFF
062-073334
OF ILLINOIS

DESIGN FIRM LIC. NO: 184008703-002
DESIGN FIRM LIC. NO. EXP : 04.30.2027
ILLINOIS LICENCE NUMBER: 062.073334
LIC. EXP.: 11.30. 2025

1144 Lake Street, LLC

BASE BUILDING MECHANICAL RENOVATIONS

1144 W LAKE ST
OAK PARK, IL 60301

NO.	DESCRIPTION	DATE
1	PERMIT REVISION 1	09/19/2025
1	ISSUED FOR PERMIT	08/25/2025

JOB NO.: 25.068

SCALE: AS SHOWN

TITLE: ELECTRICAL GROUND FLOOR POWER PLAN

SHEET: E3.2

8/24/2025 4:52:45 PM

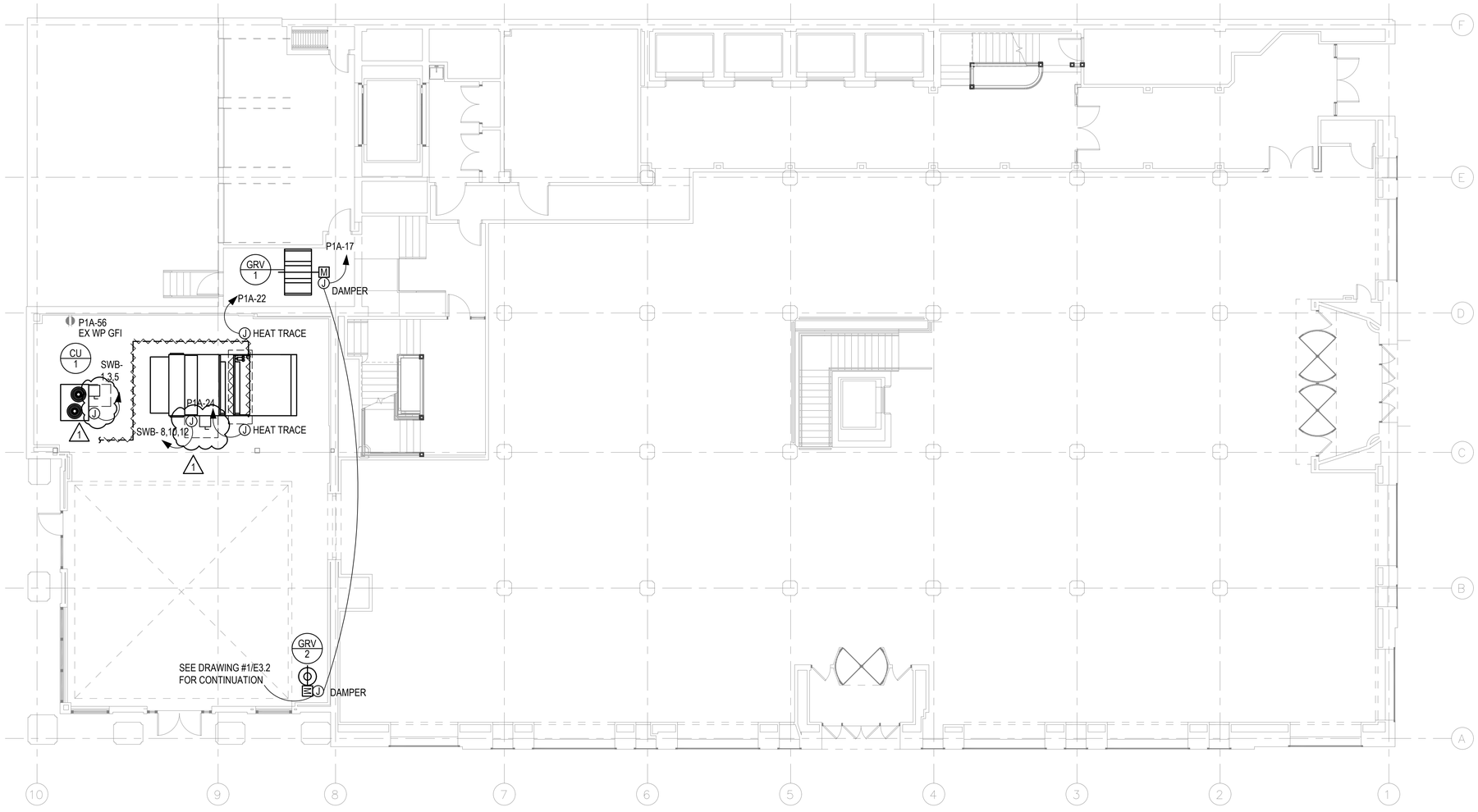

1 E3.3 LOW ROOF ELECTRICAL POWER PLAN
1/8" = 1'-0"

N

0 1' 2' 3' 4' 5' 10'
SCALE: 1/8" = 1'-0"

ELECTRICAL GENERAL NOTES:

1. FIRE STOP ALL FIRE RATED FLOORS, CEILINGS, AND WALLS AS REQUIRED BY CODE. PENETRATIONS INTO OR THROUGH FIRE RESISTANCE RATED WALLS SHALL COMPLY WITH IBC CHAPTER 7.
2. EC SHALL VERIFY ALL EXISTING RECEPTACLE LOCATIONS, FEEDER LOCATIONS AND ROUTING, JUNCTION BOXES, DISCONNECTS, POWER PANELS, RELAYS, AND ALL OTHER COMPONENTS OF THE ELECTRICAL SYSTEM PRIOR TO BID.
3. PROVIDE EXPANSION FITTINGS AS REQUIRED AT ALL EXPANSION JOINTS. COORDINATE WITH ARCHITECTURAL DRAWINGS.
4. FOLLOW ALL LOCAL AMENDMENTS OUTLINED IN OAK PARK MUNICIPAL CODE ORDINANCES.
5. TYPE IMC CONDUIT (EMT) SHALL BE USED IN ALL INTERIOR LOCATIONS, INCLUDING CIRCUITS CONCEALED WITHIN WALL AND CEILING CAVITIES AND EXPOSED CIRCUITS. EXPOSED CIRCUITS SHALL BE ROUTED PARALLEL AND PERPENDICULAR TO BUILDING STRUCTURE. EXPOSED CONDUIT SHALL BE PAINTED PER THE ARCHITECTURAL DRAWINGS.
6. RIGID METAL CONDUIT (RMC), INTERMEDIATE METAL CONDUIT (IMC) OR RIGID NON-METALLIC CONDUIT SHALL BE USED IN ALL CONCRETE AND UNDERGROUND INSTALLATIONS.
7. ALL CONDUCTORS USED FOR ELECTRIC SERVICE CONDUCTORS, SERVICE ENTRANCE CONDUCTORS, FEEDERS, CIRCUITS, GROUNDING ELECTRODES AND EQUIPMENT GROUNDS SHALL BE COPPER. ALUMINUM WIRING SHALL NOT BE PERMITTED.
8. TYPE AC, FC, FCC, IGS, MC, MI, NM, NMC, NMS,TC, SE/USE CABLING IS NOT PERMITTED FOR USE IN ANY LOCATIONS.
9. COORDINATE EXACT LOCATIONS OF MECHANICAL EQUIPMENT WITH DIVISION 23. UNLESS NOTED OTHERWISE, MECHANICAL EQUIPMENT DISCONNECTS AND VARIABLE FREQUENCY DRIVES SHALL BE FURNISHED BY DIVISION 23, INSTALLED AND WIRED BY EC. THESE DISCONNECTS HAVE NOT BEEN SHOWN ON THIS PLAN.
10. COORDINATE EXACT LOCATIONS OF PLUMBING EQUIPMENT WITH DIVISION 22. UNLESS NOTED OTHERWISE, PLUMBING EQUIPMENT DISCONNECTS SHALL BE FURNISHED, INSTALLED, AND WIRED BY EC.
11. EC SHALL NOT HAVE MORE THAN THREE CURRENT CARRYING CONDUCTORS IN A CONDUIT WITHOUT DERATING AMPACITIES PER THE NEC.
12. WHERE DEVICES ARE INCLUDED AND DIMENSIONED ON THE ARCHITECTURAL DRAWINGS, THOSE LOCATIONS SHALL GOVERN. WHERE DEVICES ARE OMITTED FROM THE ARCHITECTURAL DRAWINGS, INSTALL IN ACCORDANCE WITH THIS PLAN AND THE DEFAULT LOCATIONS IN THE ELECTRICAL SPECIFICATIONS. ALL DEVICES SHALL BE INSTALLED PER ADA. IT SHALL BE THE RESPONSIBILITY OF THE ELECTRICAL CONTRACTOR TO VERIFY EXACT DEVICE LOCATIONS. WHERE DEVICES ARE INSTALLED IN THE FIELD AND DIFFER FROM DESIGN DOCUMENT DIMENSIONS, IT IS THE RESPONSIBILITY OF THE CONTRACTOR TO CORRECT DEVICE LOCATIONS TO MATCH CONSTRUCTION DOCUMENTS, AT NO COST TO THE OWNER.
13. AUXILIARY GUTTERS UTILIZING MORE THAN 30 CURRENT CARRYING CONDUCTORS SHALL BE DERATED ACCORDING TO THE ADJUSTMENT FACTORS IN ARTICLE 310.15(B)(3)(A).

VILLAGE OF OAK PARK
CONSTRUCTION DOCUMENT(S)
REVIEWED FOR COMPLIANCE
KEEP A PRINTED APPROVED COPY OF THE PLANS ON SITE AT ALL TIMES FOR CONTRACTORS AND INSPECTORS

625 W Adams Street – 19th Floor
Chicago, IL 60661
312.320.3668

LICENSED PROFESSIONAL ENGINEER
ALEXANDER G. RADKOFF
062-073334
OF ILLINOIS

DESIGN FIRM LIC. NO: 184008703-002
DESIGN FIRM LIC. NO. EXP.: 04.30.2027
ILLINOIS LICENCE NUMBER: 062.073334
LIC. EXP.: 11.30. 2025

1144 Lake Street, LLC

BASE BUILDING MECHANICAL RENOVATIONS

1144 W LAKE ST
OAK PARK, IL 60301

NO.	DESCRIPTION	DATE
1	PERMIT REVISION 1	09/19/2025
1	ISSUED FOR PERMIT	08/25/2025

JOB NO.: 25.068

SCALE: AS SHOWN

TITLE: ELECTRICAL LOW ROOF POWER PLAN

SHEET: E3.3

8/24/2025 4:52:45 PM

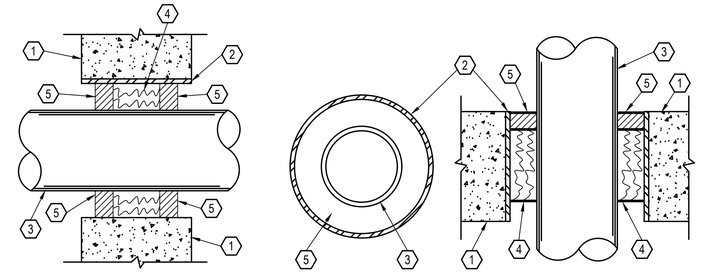

1 / E4.1 FIRE STOP DETAIL

NOT TO SCALE

KEYED NOTES: (#)

1. FLOOR OR WALL ASSEMBLY MINIMUM 5" THICK NORMAL WEIGHT CONCRETE FLOOR OR WALL OR MINIMUM 7-5/8" THICK MASONRY WALL HAVING A MINIMUM 2 HOUR FIRE RESISTIVE RATING WITH A NOMINAL 6" DIAMETER OPENING.
2. STEEL PIPE SLEEVE (OPTIONAL) NOMINAL 6" DIAMETER SCHEDULE 40 OR HEAVIER STEEL PIPE SLEEVE. (2 TRADE SIZES LARGER THAN CONDUIT).
3. STEEL OR EMT CONDUIT NOMINAL 4" DIAMETER CENTERED THROUGH THE OPENING.
4. FORMING MATERIAL MINERAL WOOL, MINIMUM DENSITY OF 4.4 PCF FIRMLY PACKED WITHIN THE OPENING TO A NOMINAL THICKNESS OF 3" FOR FLOORS. FOR WALLS, THE MINERAL WOOL SHALL BE CENTERED IN THE OPENING.
5. FILL, VOID OR CAVITY MATERIAL* - FILL MATERIAL THAT IS TROWELED INTO THE OPENING TO A MINIMUM THICKNESS OF 1/2" IN ACCORDANCE WITH THE ACCOMPANYING INSTALLATION INSTRUCTIONS. IN WALLS, THE FILL MATERIAL SHALL BE INSTALLED ON BOTH SURFACES OF THE OPENING.

* BEARING THE "UL" CLASSIFICATION MARKING

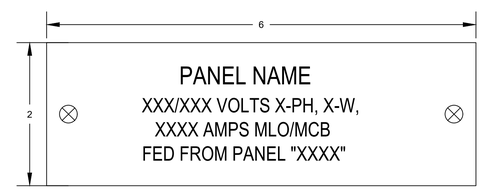

2 / E4.1 ELECTRICAL EQUIPMENT NAMEPLATE DETAIL

NOT TO SCALE

GENERAL NOTES:

1. PANEL NAME SHALL HAVE A MINIMUM LETTER HEIGHT OF 3/8". ALL OTHER TEXT SHALL HAVE A MINIMUM LETTER HEIGHT OF 1/4".
2. NAMEPLATE SHALL BE MACHINE ENGRAVED, LAMINATED PLASTIC, WITH WHITE LETTERING. BACKGROUND COLOR SHALL BE BLACK.
3. NAMEPLATE SHALL BE ATTACHED WITH RIVETS OR SELF TAPPING SCREWS.
4. DIMENSIONS INDICATED ARE MINIMUM DIMENSIONS. PROVIDE LARGER NAMEPLATE IF REQUIRED TO FIT ALL SPECIFIED INFORMATION ON NAMEPLATE.
5. "X" INDICATES FIELD TO BE FILLED IN PER PANEL SCHEDULE.

VILLAGE OF OAK PARK
CONSTRUCTION DOCUMENT(S)
REVIEWED FOR COMPLIANCE
KEEP A PRINTED APPROVED COPY OF THE PLANS ON SITE AT ALL TIMES FOR CONTRACTORS AND INSPECTORS

625 W Adams Street – 19th Floor
Chicago, IL 60661
312.320.3668

LICENSED PROFESSIONAL ENGINEER
ALEXANDER G. RADKOFF
062-073334
OF ILLINOIS

DESIGN FIRM LIC. NO: 184008703-002
DESIGN FIRM LIC. NO. EXP.: 04.30.2027
ILLINOIS LICENCE NUMBER: 062.073334
LIC. EXP.: 11.30. 2025

1144 Lake Street, LLC

BASE BUILDING MECHANICAL RENOVATIONS

1144 W LAKE ST
OAK PARK, IL 60301

NO.	DESCRIPTION	DATE
1	PERMIT REVISION 1	09/19/2025
1	ISSUED FOR PERMIT	08/25/2025

JOB NO.: 25.068

SCALE: AS SHOWN

TITLE: ELECTRICAL DETAILS

SHEET: E4.1

8/24/2025 4:52:45 PM

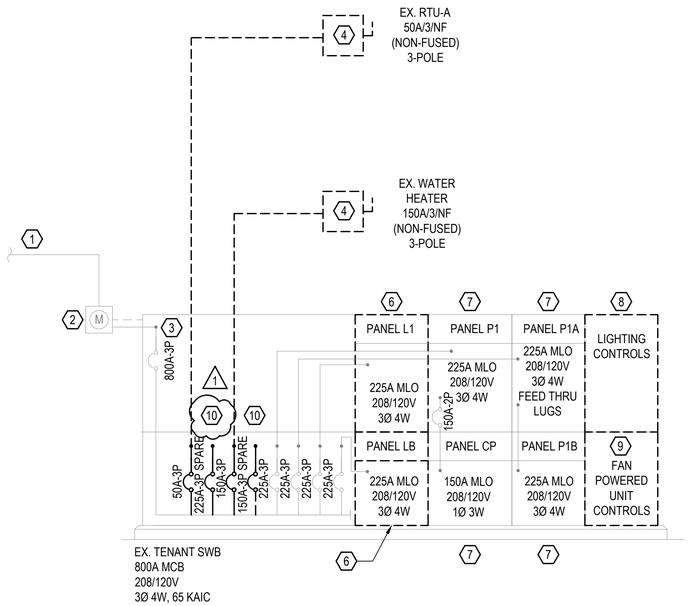

1 E5.1 PARTIAL DEMOLITION ELECTRICAL RISER DIAGRAM

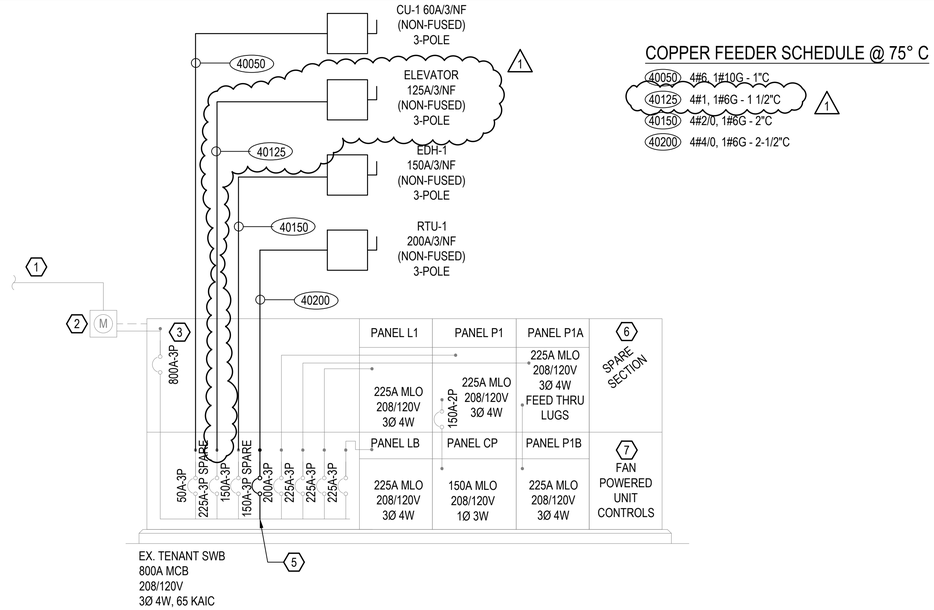

2 E5.1 PARTIAL NEW WORK ELECTRICAL RISER DIAGRAM

DEMOLITION KEYNOTES: (#)

1. EXISTING FEEDER BACK TO MAIN BUILDING SWITCHGEAR TO REMAIN.
2. EXISTING ELECTRICAL METER AND ASSOCIATED FEEDER FOR 800A TENANT SWITCHBOARD TO REMAIN.
3. EXISTING 800A 208/120V 3PH-4W MAIN CIRCUIT BREAKER TO REMAIN.
4. EXISTING BREAKER, FEEDER AND DISCONNECT SHALL BE DEMOLISHED AND EXISTING BREAKER SECTION SHALL REMAIN FOR CONNECTION UNDER NEW SCOPE OF WORK.
5. EXISTING SPARE BREAKER TO REMAIN FOR NEW CONNECTION UNDER NEW SCOPE OF WORK.
6. EXISTING PANELBOARD CIRCUITS, FEEDERS, BRANCH CIRCUITS AND DOWNSTREAM JUNCTION BOXES, RECEPTACLES AND LOCAL DISCONNECTS IF APPLICABLE SHALL BE DEMOLISHED IN THEIR ENTIRETY. EXISTING CIRCUIT BREAKERS IN PANEL TO REMAIN AS SPARES FOR CONNECTION UNDER LANDLORD NEW SCOPE AND TENANT SCOPE OF WORK.
7. EXISTING PANELBOARD TO REMAIN.
8. EXISTING LIGHTING CONTROLS SECTION TO BE DEMOLISHED. SPACE TO BE RESERVED FOR TENANT FUTURE WORK FOR LIGHTING CONTROLS SYSTEM.
9. EXISTING FAN POWERED BOX CONTROLS AND AUTOMATION SYSTEM SHALL REMAIN DURING LANDLORD CORE/SHELL PHASE FOR CONTROL OF FAN POWERED TERMINALS FOR SPACE HEATING.
10. EXISTING BREAKER SHALL BE DEMOLISHED AND BREAKER SECTION SHALL BE REPLACED UNDER NEW SCOPE OF WORK.

NEW WORK KEYNOTES: (#)

1. EXISTING FEEDER BACK TO MAIN BUILDING SWITCHGEAR TO REMAIN.
2. EXISTING ELECTRICAL METER AND ASSOCIATED FEEDER FOR 800A TENANT SWITCHBOARD TO REMAIN.
3. EXISTING 800A 208/120V 3PH-4W MAIN CIRCUIT BREAKER TO REMAIN.
4. EXISTING SPARE BREAKER TO REMAIN FOR NEW CONNECTION UNDER TENANT SCOPE OF WORK.
5. NEW 200A 208/120V 3PH-4W CIRCUIT BREAKER SHALL BE INSTALLED IN EXISTING BREAKER SPACE.
6. SPACE TO BE RESERVED FOR TENANT FUTURE WORK FOR LIGHTING CONTROLS SYSTEM.
7. EXISTING FAN POWERED BOX CONTROLS AND AUTOMATION SYSTEM SHALL REMAIN DURING LANDLORD CORE/SHELL PHASE FOR CONTROL OF FAN POWERED TERMINALS FOR SPACE HEATING.

GENERAL RISER NOTES:

1. THE RISER DIAGRAM IS DIAGRAMMATIC IN NATURE AND IS INTENDED TO SHOW SYSTEM CONNECTIVITY AND FEEDER SIZES. REFER TO POWER PLANS FOR EQUIPMENT LAYOUTS AND LOCATIONS. ELECTRICAL CONTRACTOR SHALL VERIFY THAT THE SUBMITTED EQUIPMENT DIMENSIONS FIT WITHIN THE CORRESPONDING ELECTRICAL SPACE(S). ALL EQUIPMENT CLEARANCES AND MOUNTING HEIGHTS REQUIRED BY THE NEC SHALL BE MAINTAINED.
2. THE EXISTING ELECTRICAL METERING STRATEGY SHALL BE APPROVED BY THE UTILITY COMPANY PRIOR TO THE COMMENCEMENT OF WORK. ALL WORK SHALL BE PERFORMED IN ACCORDANCE WITH UTILITY RULES AND REGULATIONS.
3. ELECTRICAL CONTRACTOR SHALL PROVIDE CONCRETE PADS FOR ALL ELECTRICAL EQUIPMENT REQUIRING A HOUSEKEEPING PAD. THIS INCLUDES TRANSFORMERS, SWITCHBOARDS, LARGE DISTRIBUTION PANELS, ETC. ALL PADS SHALL BE PROVIDED PER THE EQUIPMENT SPECIFICATIONS.
4. PROVIDE PULL BOXES WHERE REQUIRED PER NEC FOR CONDUIT BENDS.
5. PRIMARY HORIZONTAL BUSES IN SWITCHBOARDS SHALL NOT BE TAPERED.
6. REFER TO THE GROUNDING RISER DIAGRAM 2/E5.1 FOR MORE INFORMATION ON THE BUILDING GROUNDING SYSTEM.
7. WIREWAYS SHALL BE SIZED TO ACCOMMODATE FEEDER AMPACITIES NOTED ON THE RISER DIAGRAM.
8. THE BASIS OF DESIGN MATERIAL FOR ALL EQUIPMENT BUSES IS COPPER.
9. THE FULL EXTENT OF THE EXISTING ELECTRICAL DISTRIBUTION SYSTEM MAY NOT BE REPRESENTED ON THIS RISER DIAGRAM. ONLY PORTIONS THAT SHALL BE MODIFIED OR PROVIDED NEW UNDER THIS SCOPE HAVE BEEN INCLUDED.

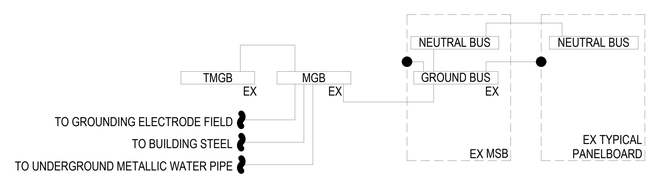

BASEMENT FLOOR

3 E6.1 PARTIAL GROUNDING RISER DIAGRAM
NOT TO SCALE

GROUNDING SYSTEM GENERAL NOTES:

1. REFER TO ELECTRICAL SPECIFICATIONS AND ELECTRICAL RISER DIAGRAM FOR ADDITIONAL INFORMATION.
2. ALL BUILDING STEEL COMPONENTS SHALL BE EFFECTIVELY BONDED TOGETHER.
3. GROUNDING RISER IS FOR REFERENCE ONLY. PROVIDE GROUNDING SYSTEM ADHERING TO 2020 NEC ARTICLE 250.
4. EQUIPMENT LUGS SHALL BE SIZED TO ACCOMMODATE ALL GROUNDING AND BONDING CONDUCTORS.
5. ALL BONDING JUMPERS AND GROUNDING CONDUCTORS INDICATED ARE COPPER.
6. EXISTING GROUNDING SYSTEM AND CONFIGURATION TO REMAIN.

VILLAGE OF OAK PARK
CONSTRUCTION DOCUMENT(S)
REVIEWED FOR COMPLIANCE
KEEP A PRINTED APPROVED COPY OF THE PLANS ON SITE AT ALL TIMES FOR CONTRACTORS AND INSPECTORS

625 W Adams Street – 19th Floor
Chicago, IL 60661
312.320.3668

LICENSED PROFESSIONAL ENGINEER
ALEXANDER G. RADKOFF
062-073334
OF ILLINOIS

DESIGN FIRM LIC. NO: 184008703-002
DESIGN FIRM LIC. NO. EXP.: 04.30.2027
ILLINOIS LICENCE NUMBER: 062.073334
LIC. EXP.: 11.30. 2025

1144 Lake Street, LLC

BASE BUILDING MECHANICAL RENOVATIONS

1144 W LAKE ST
OAK PARK, IL 60301

NO.	DESCRIPTION	DATE
1	PERMIT REVISION 1	09/19/2025
	ISSUED FOR PERMIT	08/25/2025

JOB NO.: 25.068

SCALE: AS SHOWN

TITLE: ELECTRICAL RISER DIAGRAMS

SHEET: E5.1

8/24/2025 4:52:45 PM

LIGHTING FIXTURE SCHEDULE

TYPE	FIXTURE DESCRIPTION	MANUFACTURER	MODEL	LAMP(S) LAMP #	LAMP(S) LAMP TYPE	DRIVER/ BALLAST	INPUT WATTS	VOLTS	MOUNTING	NOTES
SP1E	4' LINEAR STRIP WITH EMERGENCY BATTERY	LITHONIA	ZL1D L48 5000LM FST MVOLT 35K 80CRI E15WLCP	--	LED, 3500K, 5000LM	0-10V DIMMING	41	120	CEILING, PENDANT	
SP2E	4' LINEAR STRIP WITH EMERGENCY BATTERY	LITHONIA	ZL1D L48 3000LM FST MVOLT 35K 80CRI E15WLCP	--	LED, 3500K, 5000LM	0-10V DIMMING	30	120	CEILING, PENDANT	
SP3E	2' LINEAR STRIP WITH EMERGENCY BATTERY	LITHONIA	ZL1D L25 1500LM FST MVOLT 35K 80CRI E15WLCP	--	LED, 3500K, 5000LM	0-10V DIMMING	17	120	CEILING, PENDANT	
WM1.4	4' WALL MOUNTED STRIP WITH EMERGENCY BATTERY	LITHONIA	ZL1D L48 5000LM FST MVOLT 35K 80CRI E15WLCP	--	LED, 3500K, 5000LM	0-10V DIMMING	41	120	SURFACE, WALL	
XE1	THERMOPLASTIC EXIT SIGN WITH LED HEADS, SELF-DIAGNOSTICS	LITHONIA	LHQM LED R HO SD	--	LED	LED	3	120	UNIVERSAL	PROVIDE THE NUMBER OF FACES AND DIRECTIONAL CHEVRONS AS INDICATED ON THE LIGHTING PLAN.
EB1	LED BATTERY PACK UNIT WITH ATTACHED HEADS, SELF-DIAGNOSTIC, NICKEL CADMIUM BATTERY OR NICKEL HYDRIDE BATTERY. 90-MINUTE BATTERY - CHICAGO APPROVED	SURE - LIGHTS	XR6C-LED	--	LED	INTEGRAL LED DRIVER	2	120	WALL, CEILING	
EB2	UL924 WET LISTED LED BATTERY PACK UNIT WITH ATTACHED HEADS, SELF-DIAGNOSTIC, NICKEL CADMIUM BATTERY OR NICKEL HYDRIDE BATTERY. 90-MINUTE BATTERY - CHICAGO APPROVED	SURE - LIGHTS	SELDWTA50PS	--	LED	INTEGRAL LED DRIVER	4	120	WALL	PHOTOCONTROL FOR DUSK TO DAWN OPERATION. RATED FOR -22 DEG F TO 104 DEG F. COLOR SHALL BE SELECRED BY ARCHITECT (WHITE, LACK, SILVER, OR BRONZE)

1

NOTES:
1. ARCHITECT SHALL SPECIFY / VERIFY ALL FINISH SELECTIONS.
2. REFER TO ARCHITECTURAL DRAWINGS FOR CEILING TYPES.
3. ELECTRICAL CONTRACTOR SHALL PROVIDE ALL MOUNTING ACCESSORIES.
4. LIGHTING FIXTURE SUBSTITUTIONS THAT ARE CONSIDERED EQUAL TO THE SPECIFIED PRODUCTS MAY BE SUBMITTED AND WILL BE REVIEWED BY ARCHITECT AND ELECTRICAL ENGINEER. ACCEPTANCE WILL BE EVALUATED BASED ON AESTHETICS, PERFORMANCE, AND QUALITY. DO NOT PROVIDE VALUE ENGINEERING OPTIONS UNLESS SPECIFICALLY DIRECTED BY THE OWNER, ARCHITECT, OR ENGINEER.
5. THE STANDARD DRIVER OPTION FOR MOST FIXTURES IS 0-10V DIM. THE CONTRACTOR IS ONLY REQUIRED TO PROVIDE 0-10V WIRING WHERE DIMMING CONTROLS ARE SHOWN ON THE LIGHTING PLAN.

VILLAGE OF OAK PARK
CONSTRUCTION DOCUMENT(S)
REVIEWED FOR COMPLIANCE
KEEP A PRINTED APPROVED COPY OF THE PLANS ON SITE AT ALL TIMES FOR CONTRACTORS AND INSPECTORS

625 W Adams Street – 19th Floor
Chicago, IL 60661
312.320.3668

LICENSED PROFESSIONAL ENGINEER
ALEXANDER G. RADKOFF
062-073334
OF ILLINOIS

DESIGN FIRM LIC. NO: 184008703-002
DESIGN FIRM LIC. NO. EXP.: 04.30.2027
ILLINOIS LICENCE NUMBER: 062.073334
LIC. EXP.: 11.30. 2025

1144 Lake Street, LLC

BASE BUILDING MECHANICAL RENOVATIONS

1144 W LAKE ST
OAK PARK, IL 60301

NO.	DESCRIPTION	DATE
1	PERMIT REVISION 1	09/19/2025
	ISSUED FOR PERMIT	08/25/2025

JOB NO.: 25.068

SCALE: AS SHOWN

TITLE: ELECTRICAL SCHEDULES

SHEET: E6.1

8/24/2025 4:52:45 PM

Existing Branch Panel: P1A

Location: BASEMENT TENANT ELECTRICAL ROOM
Supply From: EXISTING MAIN SWITCHBOARD
Mounting: SURFACE
Enclosure: TYPE 1

Volts: 208/120V
Phases: 3
Wires: 4

A.I.C. Rating: 22 KAIC
Mains Type: MCB
Mains Rating: 225A
MCB Rating: 225A

CKT	Circuit Description	Notes	Wire Size	Trip	Pole	LOAD (VA) A	LOAD (VA) B	LOAD (VA) C	Pole	Trip	Wire Size	Notes	Circuit Description	CKT
1						1813	2000		2	25A	3#10, 1#10G - 3/4"C	3,4	ECH-1	2
3	AHU-1	3,4	4#10, 1#10G - 3/4"C	30A	3		1813	2000						4
5								1813	2	25A	3#10, 1#10G - 3/4"C	3,4	ECH-2	6
7	EX SPARE	1		20A	1	2000								8
9	~~EX FRIDGE RECP~~	2		20A	1				1	20A		2	~~EX EWC RECP~~	10
11	~~EX MICROWAVE RECP~~	2		20A	1									12
13	~~EX TOASTER RECP~~	2		20A	1				3	15A	4#12, 1#12G - 3/4"C	3,4	EF-1	14
15	~~EX COUNTER RECP~~	2		20A	1									16
17	MOTORIZED DAMPERS	3,4	2#12, 1#12G - 3/4"C	20A	1			180	1	20A		1	EX EMS RECP	18
19	EX SPARE	1		20A	1				1	20A		2	~~EX RCVING/STOCK RECP~~	20
21	EX SPARE	1		20A	1		550		1	20A	2#12, 1#12G - 3/4"C	3,4	HEAT TRACE	22
23	EX SPARE	1		20A	1			750	1	20A	2#12, 1#12G - 3/4"C	3,4	HEAT TRACE	24
25	EX SPARE	1		20A	1				1	20A		2	~~EX OFFICE RECP~~	26
27	EX SPARE	1		20A	1				1	20A		2	~~EX OFFICE RECP~~	28
29	EX SPARE	1		20A	1				1	20A		2	~~EX OFFICE RECP~~	30
31	EX SPARE	1		20A	1				1	20A		2	~~EX RELAY RECP~~	32
33	EX SPACE								1	20A		1	EX E-BAR BASEBOARD HEAT	34
35	EX SPACE								1	20A		1	EX E-BAR BASEBOARD HEAT	36
37	EX SPACE								1	20A		1	EX EMS RECP	38
39	EX SPACE												EX SPACE	40
41	EX SPACE												EX SPACE	42
43	~~EX F-4 SIGN~~	2		20A	1				1	20A		1	~~EX SIGN F-1~~	44
45	~~EX F-5 SIGN~~	2		20A	1				1	20A		1	~~EX SIGN F-2~~	46
47	~~EX F-6 SIGN~~	2		20A	1				1	20A		1	~~EX SIGN F-3~~	48
49	EX SPARE	1		20A	1				1	20A		1	~~EX FCU-B~~	50
51	EX SPARE	1		20A	1				2	20A		2	~~EX CU BLOWER COMP ROOM~~	52
53	~~EX COLUMN LIGHTS~~	2		20A	1									54
55	~~EX PE BAR RECP~~	2		20A	1				1	20A		1	EX RTU RECP	56
57	~~EX F-9 BORDERS SIGN~~	2		20A	1				1	20A		1	EX SPARE	58
59	EX SPARE	1		20A	1				1	20A		2	~~EX RECP 2ND FLOOR CLMN~~	60
61	EX SPARE	1		20A	1				1	20A		2	~~EX RECP 2ND FLOOR CLMN~~	62
63	EX SPARE	1		20A	1				1	20A		2	~~EX RECP 2ND FLOOR CLMN~~	64
65	EX FPT 1A	1		20A	1				1	20A		2	~~EX CONDENSER COMP~~	66
67	EX. FPT 1E	1		20A	1									68
69	EX. FPT 1C SPARE	1		20A	1				1	20A		1	EX BASEBOARD HEAT	70
71	EX. FPT 1D-1F	1		20A	1				1	20A		1	EX BASEBOARD HEAT	72
73	EX. FPT 1D-1F	1		20A	1				1	20A		1	EX ELEC BASEBOARD RECP	74
75	EX. FPT 1B-1C	1		20A	1				1	20A		1	EX ELEC BASEBOARD RECP	76
77	EX. FPT 1B-1C	1		20A	1				1	20A		1	EX ELEC BASEBOARD RECP	78
79	EX SPARE	1		20A	1				1	20A		1	EX ELEC BASEBOARD RECP	80
81	EX SPARE	1		20A	1				1	20A		1	EX ELEC BASEBOARD RECP	82
83	EX SPARE	1		20A	1				1	20A		1	EX ELEC BASEBOARD RECP	84
					Total Load:	5813	4363	4743						
					Amps:		41.4							

NOTES:
1. UNLESS OTHERWIRE NOTED, ALL BRANCH CIRCUIT BREAKERS ARE EXISTING TO REMAIN.
2. EX. FEEDER SHALL BE DEMOLISHED BACK TO CIRCUIT BREAKER. EXISTING CIRCUIT BREAKER TO REMAIN AS SPARE FOR FUTURE TENANT CONNECTION.
3. CIRCUIT BREAKER SERVING MECHANICAL/PLUMBING EQUIPMENT SHALL BE HACR TYPE
4. (WHERE NOTED) CIRCUIT BREAKER AND CONDUCTOR SIZES SHALL BE COORDINATED WITH EQUIPMENT SPECIFICATIONS

Existing Branch Panel: L1

Location: BASEMENT TENANT ELECTRICAL ROOM
Supply From: EXISTING MAIN SWITCHBOARD
Mounting: SURFACE
Enclosure: TYPE 1

Volts: 208/120V
Phases: 3
Wires: 4

A.I.C. Rating: 22 KAIC
Mains Type: MCB
Mains Rating: 225A
MCB Rating: 225A

1

CKT	Circuit Description	Notes	Wire Size	Trip	Pole	LOAD (VA) A	LOAD (VA) B	LOAD (VA) C	Pole	Trip	Wire Size	Notes	Circuit Description	CKT
1	1ST FLR LIGHTING	3,4	2#12, 1#12G - 3/4"C	20A	1	583	572		1	20A	2#12, 1#12G - 3/4"C	3,4	1ST FLR LIGHTING	2
3	BASEMENT LIGHTING	3,4	2#12, 1#12G - 3/4"C	20A	1		656	820	1	20A	2#12, 1#12G - 3/4"C	3,4	BASEMENT LIGHTING	4
5	EXTERIOR EMER. LIGHTS	3,4	2#12, 1#12G - 3/4"C	20A	1			16	1	20A		2	~~EX (A1-5) SALES~~	6
7	~~EX (B1-2) SALES~~	2		20A	1				1	20A		2	~~EX (B1-9) SALES~~	8
9	~~EX (A1-3) SALES~~	2		20A	1				1	20A		2	~~EX (A1-6) SALES~~	10
11	~~EX (B1-3) CENTER STAIRS~~	2		20A	1				1	20A		2	~~EX (D1-1) TRACK~~	12
13	~~EX (A1-7) CASH WRAP~~	2		20A	1				1	20A		2	~~EX (D1-2) TRACK~~	14
15	~~EX (A1-8) CASH WRAP~~	2		20A	1				1	20A		2	~~EX (D1-3) TRACK~~	16
17	~~EX (D1-11) DISPLAYS~~	2		20A	1				1	20A		2	~~EX (D1-4) TRACK~~	18
19	~~EX (C-6) E-BAR COVE NW~~	2		20A	1				1	20A		2	~~EX (D1-5) TRACK~~	20
21	~~EX (C-7) E-BAR COVE SE~~	2		20A	1				1	20A		2	~~EX (D1-6) TRACK~~	22
23	~~EX TRACK E-BAR E MID~~	2		20A	1				1	20A		2	~~EX (D1-7) TRACK~~	24
25	~~EX TRACK E-BAR MID~~	2		20A	1				1	20A		2	~~EX (D1-8) TRACK~~	26
27	~~EX TRACK E-BAR SOUTH~~	2		20A	1				1	20A		2	~~EX (D1-9) TRACK~~	28
29	~~EX SUSPENDED FLUOR FXT~~	2		20A	1				1	20A		2	~~EX (C-5) E-BAR PANTRY~~	30
31	~~EX (C-1) E-BAR CANS~~	2		20A	1				1	20A		2	~~EX REC. SEC. MOUNT RECP~~	32
33	~~EX (C-2) E-BAR P+C S WALL~~	2		20A	1				1	20A		2	~~EX REC. SEC. MOUNT RECP~~	34
35	~~EX (C-3) E-BAR TACK~~	2		20A	1				1	20A		2	~~EX REC. SEC. MOUNT RECP~~	36
37	~~EX (C-4) N TRACK~~	2		20A	1				1	20A		2	~~EX. W,L-N,L/EM/EXITS~~	38
39	EX SUB FEED PANEL CP	1		150A	1				1	20A		2	~~EX. W,L-N,L/EM/EXITS~~	40
41					1				1	20A		2	~~EX. W,L-N,L/EM/EXITS~~	42
					Total Load:	1155	1476	16						
					Amps:		7.3							

NOTES:
1. UNLESS OTHERWIRE NOTED, ALL BRANCH CIRCUIT BREAKERS ARE EXISTING TO REMAIN.
2. EX. FEEDER SHALL BE DEMOLISHED BACK TO CIRCUIT BREAKER. EXISTING CIRCUIT BREAKER TO REMAIN AS SPARE FOR FUTURE TENANT CONNECTION.
3. ~~(WHERE NOTED) PROVIDE NEW CIRCUIT BREAKER, SIZED AS SHOWN. MATCH MANUFACTURER, MODEL, AND AIC RATING OF EXISTING CIRCUIT BREAKERS.~~
4. (WHERE NOTED) ALL LIGHTING CIRCUITED FROM THIS BREAKER SHALL SERVE AS A MEANS OF EMERGENCY LIGHTING VIA INTEGRAL 90 MINUTE MINIMUM BATTERY PACK.

SWITCHBOARD EX. SWB-1 SCHEDULE

800A MCB 208/120V 3 PHASE 4 WIRE 65 KAIC

AREA/EQUIPMENT SERVED	LOAD (VA) A	LOAD (VA) B	LOAD (VA) C	BKR TRIP	FRAME SIZE	CKT NO.
CU-1	4701.0	4701.0	4701.0	50A		1
ELEVATOR	8276.0	8276.0	8276.0	125A		2
EDH-1	11666.0	11666.0	11666.0	150A		3
RTU-1	14873.0	14873.0	14873.0	200A		4
PANEL P1	360.0	0.0	360.0	225A		5
PANEL P1A	5813.0	4363.0	4743.0	225A		6
PANEL L1	1155.0	1476.0	0.0	225A		7
PANEL LB	0.0	0.0	0.0	225A		8
TOTAL CONNECTED VA:	46844	45355	44619			
TOTAL CONNECTED AMPS:	130.0	125.9	123.8			
TOTAL AMPS:	379.8					

NOTES:

Existing Branch Panel: LB

Location: BASEMENT TENANT ELECTRICAL ROOM
Supply From: EXISTING MAIN SWITCHBOARD
Mounting: SURFACE
Enclosure: TYPE 1

Volts: 208/120V
Phases: 3
Wires: 4

A.I.C. Rating: 22 KAIC
Mains Type: MCB
Mains Rating: 225A
MCB Rating: 225A

CKT	Circuit Description	Notes	Wire Size	Trip	Pole	LOAD (VA) A	LOAD (VA) B	LOAD (VA) C	Pole	Trip	Wire Size	Notes	Circuit Description	CKT
1	~~EX AB-3 BASEMENT SALES~~	2		20A	1				1	20A		2	~~EX BASEMENT SALES AB-2~~	2
3	~~EX BB-3~~	2		20A	1				1	20A		2	~~EX BB-2~~	4
5	~~EX AB-1~~	2		20A	1				1	20A		1	EX SPARE	6
7	~~EX BB-1~~	2		20A	1				1	20A		1	EX SPARE	8
9	~~EX AB-4~~	2		20A	1				1	20A		1	EX SPARE	10
11	~~EX BB-4~~	2		20A	1				1	20A		2	~~EX BASEMENT SALES BB-6~~	12
13	~~EX AB-5~~	2		20A	1				1	20A		2	~~EX BASEMENT SALES BB-6~~	14
15	~~EX BB-5~~	2		20A	1				1	20A		2	~~EX SPORT/DELIVERY~~	16
17	SPACE				1				1	20A		2	~~EX SPORT/DELIVERY~~	18
19	~~EX TOILETS~~	2		20A	1				1	20A		2	~~EX DISPLAYS DB-7~~	20
21	~~EX DB-1 DISPLAYS~~	2		20A	1				1	20A		2	~~EX DISPLAYS DB-8~~	22
23	~~EX DB-2 DISPLAYS~~	2		20A	1				1	20A		2	~~EX DISPLAYS DB-9~~	24
25	~~EX DB-3 DISPLAYS~~	2		20A	1				1	20A		1	EX SPARE	26
27	~~EX DB-4 DISPLAYS~~	2		20A	1				1	20A		1	EX SPARE	28
29	~~EX DB-5 DISPLAYS~~	2		20A	1				1	20A		1	EX SPARE	30
31	~~EX DB-6 DISPLAYS~~	2		20A	1				1	20A		2	~~EX OFFICE LTG~~	32
33	EX SPARE	1		20A	1				1	20A		2	~~EX OFFICE LTG~~	34
35	EX SPARE	1		20A	1				1	20A		2	~~EX OFFICE LTG~~	36
37	EX SPARE	1		20A	1				1	20A		2	~~EX NL/EM/EXITS~~	38
39	EX SPACE	1		20A	1				1	20A		2	~~EX NL/EM/EXITS~~	40
41	EX SPACE	1		20A	1				1	20A		2	EX	42
					Total Load:	0	0	0						
					Amps:		0.0							

NOTES:
1. UNLESS OTHERWISE NOTED, ALL BRANCH CIRCUIT BREAKERS ARE EXISTING TO REMAIN.
2. EX. FEEDER SHALL BE DEMOLISHED BACK TO CIRCUIT BREAKER. EXISTING CIRCUIT BREAKER TO REMAIN AS SPARE FOR FUTURE TENANT CONNECTION.

Existing Branch Panel: P1

Location: BASEMENT TENANT ELECTRICAL ROOM
Supply From: EXISTING MAIN SWITCHBOARD
Mounting: SURFACE
Enclosure: TYPE 1

Volts: 208/120V
Phases: 3
Wires: 4

A.I.C. Rating: 22 KAIC
Mains Type: MCB
Mains Rating: 225A
MCB Rating: 225A

CKT	Circuit Description	Notes	Wire Size	Trip	Pole	LOAD (VA) A	LOAD (VA) B	LOAD (VA) C	Pole	Trip	Wire Size	Notes	Circuit Description	CKT
1	~~EX MGR CCTV RECP~~	2		20A	1	360			1	20A	2#12, 1#12G - 3/4"C	3	REC MDF	2
3	~~EX MGR CCTV RECP~~	2		20A	1				1	20A		1	EX SPARE	4
5	REC MDF	3	2#12, 1#12G - 3/4"C	20A	1			360	1	20A		2	~~EX TOILET EF-2 (A-10)~~	6
7	EX SPARE	1		20A	1				1	20A		1	EX SPARE	8
9	EX SPARE	1		20A	1				1	20A		1	EX SPARE	10
11	EX SPARE	1		20A	1				1	20A		2	~~EX BASEMENT TABLE RECP~~	12
13	EX SPARE	1		20A	1				1	20A		1	EX SPARE	14
15	~~EX MAIN INFO RECP~~	2		20A	1				1	20A		1	EX SPARE	16
17	~~EX MAIN INFO RECP~~	2		20A	1				1	20A		2	~~EX WINDOW RECP~~	18
19	~~EX MAIN INFO RECP~~	2		20A	1				1	20A		2	~~EX COUNTER RECP~~	20
21	~~EX PAPER CHASE~~	2		20A	1				1	20A		1	EX SPARE	22
23	EX SPARE	1		20A	1				1	20A		1	EX ELEVATOR/LSTN STN	24
25	~~EX PAPER CHASE~~	2		20A	1				1	20A		2	~~EX BASEMENT L.S.-RECP E-3~~	26
27	EX SPARE	1		20A	1				1	20A		2	~~EX BASEMENT L.S.-RECP E-4~~	28
29	EX SPARE	1		20A	1				1	20A		2	~~EX BASEMENT L.S.-RECP E-5~~	30
31	EX SPARE	1		20A	1				1	20A		2	~~EX BASEMENT L.S.-RECP E-6~~	32
33	EX SPARE	1		20A	1				1	20A		2	~~EX BASEMENT L.S.-RECP E-7~~	34
35	EX SPARE	1		20A	1				1	20A		2	~~EX BASEMENT L.S.-RECP E-8~~	36
37	EX SPARE	1		20A	1				1	20A		2	~~EX BASEMENT L.S.-RECP E-9~~	38
39	EX SUB FEED PANEL CP	1		150A	2				1	20A		2	~~EX PERIODICALS~~	40
41									1	20A		2	~~EX PERIODICALS~~	42
					Total Load:	360	0	360						
					Amps:		2.0							

NOTES:
1. UNLESS OTHERWISE NOTED, ALL BRANCH CIRCUIT BREAKERS ARE EXISTING TO REMAIN.
2. EX. FEEDER SHALL BE DEMOLISHED BACK TO CIRCUIT BREAKER. EXISTING CIRCUIT BREAKER TO REMAIN AS SPARE FOR FUTURE TENANT CONNECTION.
3. (WHERE NOTED) PROVIDE NEW CIRCUIT BREAKER, SIZED AS SHOWN. MATCH MANUFACTURER, MODEL, AND AIC RATING OF EXISTING CIRCUIT BREAKERS.

VILLAGE OF OAK PARK
CONSTRUCTION DOCUMENT(S)
REVIEWED FOR COMPLIANCE
KEEP A PRINTED APPROVED COPY OF THE PLANS ON SITE AT ALL TIMES FOR CONTRACTORS AND INSPECTORS

625 W Adams Street – 19th Floor
Chicago, IL 60661
312.320.3668

LICENSED PROFESSIONAL ENGINEER
ALEXANDER G. RADKOFF
062-073334
OF ILLINOIS

DESIGN FIRM LIC. NO: 184008703-002
DESIGN FIRM LIC. NO. EXP.: 04.30.2027
ILLINOIS LICENCE NUMBER: 062.073334
LIC. EXP.: 11.30. 2025

1144 Lake Street, LLC

BASE BUILDING MECHANICAL RENOVATIONS

1144 W LAKE ST
OAK PARK, IL 60301

NO.	DESCRIPTION	DATE
1	PERMIT REVISION 1	09/19/2025
1	ISSUED FOR PERMIT	08/25/2025

JOB NO.: 25.068

SCALE: AS SHOWN

TITLE: ELECTRICAL SCHEDULES

SHEET: E6.2

8/24/2025 4:52:45 PM

Existing Branch Panel: P1

Location: BASEMENT TENANT ELECTRICAL ROOM
Supply From: EXISTING MAIN SWITCHBOARD
Mounting: SURFACE
Enclosure: TYPE 1

Volts: 208/120V
Phases: 3
Wires: 4

A.I.C. Rating: 22 KAIC
Mains Type: MCB
Mains Rating: 225A
MCB Rating: 225A

CKT	Circuit Description	Notes	Wire Size	Trip	Pole	LOAD (VA) A	LOAD (VA) B	LOAD (VA) C	Pole	Trip	Wire Size	Notes	Circuit Description	CKT
1	~~EX MGR CCTV RECP~~	2		20A	1	**360**			1	20A	**2#12, 1#12G - 3/4"C**	3	**REC MDF**	2
3	~~EX MGR CCTV RECP~~	2		20A	1				1	20A		1	EX SPARE	4
5	**REC MDF**	3	**2#12, 1#12G - 3/4"C**	20A	1			**360**	1	20A		2	~~EX TOILET EF 2 (A-10)~~	6
7	EX SPARE	1		20A	1				1	20A		1	EX SPARE	8
9	EX SPARE	1		20A	1				1	20A		1	EX SPARE	10
11	EX SPARE	1		20A	1				1	20A		2	~~EX BASEMENT TABLE RECP~~	12
13	EX SPARE	1		20A	1				1	20A		1	EX SPARE	14
15	~~EX MAIN INFO RECP~~	2		20A	1				1	20A		1	EX SPARE	16
17	~~EX MAIN INFO RECP~~	2		20A	1				1	20A		2	~~EX WINDOW RECP~~	18
19	~~EX MAIN INFO RECP~~	2		20A	1				1	20A		2	~~EX COUNTER RECP~~	20
21	~~EX PAPER CHASE~~	2		20A	1				1	20A		1	EX SPARE	22
23	EX SPARE	1		20A	1				1	20A		1	EX ELEVATOR/LSTN STN	24
25	~~EX PAPER CHASE~~	2		20A	1				1	20A		2	~~EX BASEMENT L.S. RECP E-3~~	26
27	EX SPARE	1		20A	1				1	20A		2	~~EX BASEMENT L.S. RECP E-4~~	28
29	EX SPARE	1		20A	1				1	20A		2	~~EX BASEMENT L.S. RECP E-5~~	30
31	EX SPARE	1		20A	1				1	20A		2	~~EX BASEMENT L.S. RECP E-6~~	32
33	EX SPARE	1		20A	1				1	20A		2	~~EX BASEMENT L.S. RECP E-7~~	34
35	EX SPARE	1		20A	1				1	20A		2	~~EX BASEMENT L.S. RECP E-8~~	36
37	EX SPARE	1		20A	1				1	20A		2	~~EX BASEMENT L.S. RECP E-9~~	38
39	EX SUB FEED PANEL CP	1		150A	2				1	20A		2	~~EX PERIODICALS~~	40
41									1	20A		2	~~EX PERIODICALS~~	42
					Total Load:	360	0	360						
					Amps:	2.0								

NOTES:
1. UNLESS OTHERWISE NOTED, ALL BRANCH CIRCUIT BREAKERS ARE EXISTING TO REMAIN.
2. EX. FEEDER SHALL BE DEMOLISHED BACK TO CIRCUIT BREAKER. EXISTING CIRCUIT BREAKER TO REMAIN AS SPARE FOR FUTURE TENANT CONNECTION.
3. (WHERE NOTED) PROVIDE NEW CIRCUIT BREAKER; SIZED AS SHOWN. MATCH MANUFACTURER, MODEL, AND AIC RATING OF EXISTING CIRCUIT BREAKERS.

Existing Branch Panel: CDP-7

Location: BASEMENT TENANT ELECTRICAL ROOM
Supply From: EXISTING MAIN SWITCHBOARD
Mounting: SURFACE
Enclosure: TYPE 1

Volts: 208/120V
Phases: 3
Wires: 4

A.I.C. Rating: 22 KAIC
Mains Type: MCB
Mains Rating: 225A
MCB Rating: 225A

CKT	Circuit Description	Notes	Wire Size	Trip	Pole	LOAD (VA) A	LOAD (VA) B	LOAD (VA) C	Pole	Trip	Wire Size	Notes	Circuit Description	CKT
1	EX SPARE	1		20A	1				1	20A			EX SPARE	2
3	EX SPARE	1		20A	1				3	20A		3	~~EX GRINDER~~	4
5	EX SPARE	1		20A	1									6
7	EX SPARE	1		20A	1									8
9	EX SPARE	1		20A	1				2	30A		2	EX. ELEV. PANEL	10
11	EX SPARE	1		20A	1									12
13	EX SPARE	1		20A	1				1	20A		1	EX SPARE	14
15	EX SPARE	1		20A	1				1	20A		1	EX SPARE	16
17	EX SPARE	1		20A	1				1	20A		1	EX SPARE	18
19	EX SPARE	1		20A	1				1	20A		1	EX SPARE	20
21	EX SPARE	1		20A	1				1	20A		1	EX SPARE	22
23	EX SPARE	1		20A	1				1	20A		1	EX SPARE	24
25	EX SPARE	1		20A	1				1	20A		1	EX SPARE	26
27	EX SPARE	1		20A	1				1	20A		1	EX SPARE	28
29	EX SPARE	1		20A	1				1	20A		1	EX SPARE	30
31	EX SPARE	1		20A	1				1	20A		1	EX SPARE	32
33	EX SPARE	1		20A	1				1	20A		1	EX SPARE	34
35	EX SPARE	1		20A	1				1	20A		1	EX SPARE	36
37	EX SPARE	1		20A	1				1	20A		1	EX SPARE	38
39	EX SPARE	1		20A	1				1	20A		1	EX SPARE	40
41	EX SPARE	1		20A	1				1	20A		1	EX SPARE	42
					Total Load:	0	0	0						
					Amps:	0.0								

NOTES:
1. UNLESS OTHERWISE NOTED, ALL BRANCH CIRCUIT BREAKERS ARE EXISTING TO REMAIN.
2. EX. ELEVATOR PANEL FEEDER SHALL BE DISCONNECTED AND RELOCATED TO TENANT PANEL. EXISTING CIRCUIT BREAKER TO REMAIN
3. EX. GRINDER FEEDER SHALL BE DEMOLISHED BACK TO CIRCUIT BREAKER. EXISTING CIRCUIT BREAKER TO REMAIN.

Existing Branch Panel: CP

Location: BASEMENT TENANT ELECTRICAL ROOM
Supply From: PANEL P1
Mounting: SURFACE
Enclosure: TYPE 1

Volts: 208/120V
Phases: 1
Wires: 3

A.I.C. Rating: KAIC
Mains Type: MLO
Mains Rating: 150
MCB Rating: -

CKT	Circuit Description	Notes	Wire Size	Trip	Pole	LOAD (VA) A	LOAD (VA) B	Pole	Trip	Wire Size	Notes	Circuit Description	CKT
1	~~EX POS RECP~~	2		20A	1			1	20A		2	~~EX MINI INFO RECP~~	2
3	~~EX POS RECP~~	2		20A	1			1	20A		2	~~EX MINI INFO RECP~~	4
5	~~EX POS RECP~~	2		20A	1			1	20A		2	~~EX MINI INFO RECP~~	6
7	~~EX POS RECP~~	2		20A	1			1	20A		2	~~EX SPARE~~	8
9	~~EX POS RECP~~	2		20A	1			1	20A		1	EX OFFICE RECP	10
11	~~EX POS RECP~~	2		20A	1			1	20A		1	EX OFFICE RECP	12
13	~~EX PRINTER/FAX RECP~~	2		20A	1			1	20A		1	EX OFFICE RECP	14
15	~~EX RIMW CLOCK RECP~~	2		20A	1		**1918**	**2**	**30A**	**3#10, 1#10G - 3/4"C**	3	**EX ELEV. PANEL**	16
17	~~EX COMPUTER RECP~~	2		20A	1	**1918**							18
19	~~EX COMPUTER RECP~~	2		20A	1			1	20A			EX SPARE	20
21	~~EX COMPUTER RECP~~	2		20A	1			1	20A		2	~~EX MINI INFO RECP~~	22
23	EX SPARE											EX SPARE	24
25	EX SPACE											EX SPACE	26
27	EX SPACE											EX SPACE	28
29	EX SPACE											EX SPACE	30
31	EX SPACE											EX SPACE	32
33	EX SPACE											EX SPACE	34
35	EX SPACE											EX SPACE	36
37	EX SPACE											EX SPACE	38
39	EX SPACE											EX SPACE	40
41	EX SPACE											EX SPACE	42
					Total Load:	1918	1918						
					Amps:	18.4							

NOTES:
1. UNLESS OTHERWIRE NOTED, ALL BRANCH CIRCUIT BREAKERS ARE EXISTING TO REMAIN.
2. EX. FEEDER SHALL BE DEMOLISHED BACK TO CIRCUIT BREAKER. EXISTING CIRCUIT BREAKER TO REMAIN AS SPARE FOR FUTURE TENANT CONNECTION.
3. (WHERE NOTED) PROVIDE NEW CIRCUIT BREAKER; SIZED AS SHOWN. MATCH MANUFACTURER, MODEL, AND AIC RATING OF EXISTING CIRCUIT BREAKERS.

VILLAGE OF OAK PARK
CONSTRUCTION DOCUMENT(S)
REVIEWED FOR COMPLIANCE
KEEP A PRINTED APPROVED COPY OF THE PLANS ON SITE AT ALL TIMES FOR CONTRACTORS AND INSPECTORS

625 W Adams Street – 19th Floor
Chicago, IL 60661
312.320.3668

LICENSED PROFESSIONAL ENGINEER
ALEXANDER G. RADKOFF
062-073334
ILLINOIS

DESIGN FIRM LIC. NO: 184008703-002
DESIGN FIRM LIC. NO. EXP.: 04.30.2027
ILLINOIS LICENCE NUMBER: 062.073334
LIC. EXP.: 11.30. 2025

1144 Lake Street, LLC

BASE BUILDING MECHANICAL RENOVATIONS

1144 W LAKE ST
OAK PARK, IL 60301

NO.	DESCRIPTION	DATE
1	PERMIT REVISION 1	09/19/2025
1	ISSUED FOR PERMIT	08/25/2025

JOB NO.: 25.068

SCALE: AS SHOWN

TITLE: ELECTRICAL SCHEDULES

SHEET: E6.3

9/24/2025 4:52:45 PM

COM*check* Software Version COMcheckWeb

Interior Lighting Compliance Certificate

Project Information

Energy Code: 2021 IECC
Project Title: 1144 Lake Street White Box Renovation
Project Type: Alteration

Construction Site:

Owner/Agent:
Nicholas Karris
Water Tower Realty Corporation
415 N LaSalle, Suite 700
Chicago, Illinois 60654
312-828-0320
nkarris@wtrm.com

Designer/Contractor:
Alexander Radkoff
Allen + Shariff Corporation
625 W Adams St - 19th Floor
Chicago, Illinois 60661
312-620-3668
aradkoff@allensshariff.com

1

Allowed Interior Lighting Power

A Area Category	B Floor Area (ft2)	C Allowed Watts / ft2	D Allowed Watts
1-White Box Retail Core/Shell (Retail)	24160	0.84	20294
		Total Allowed Watts =	20294

Proposed Interior Lighting Power

A Fixture ID : Description / Lamp / Wattage Per Lamp / Ballast	B Lamps/ Fixture	C # of Fixture	D Fixture Watt.	E (C X D)
White Box Retail Core/Shell (Retail, 24160 sq.ft.)				
2' Linear Strip 1500 LM: SP3E: 2' Linear Strip: LED Linear 17W:	1	2	17	34
4' Linear Strip 2500 LM: SP2E: 4' Linear Strip: LED Linear 22W:	1	4	22	88
4' Linear Strip 5000 LM: SP1E: 4' Linear Strip: Other:	1	56	41	2296
4' Wall Mounted Linear Strip 5000 LM: WM1.4: 4' Wall Linear: Other:	1	2	41	82
			Total Proposed Watts =	2500

Interior Lighting PASSES

Interior Lighting Compliance Statement

Compliance Statement: The proposed interior lighting alteration project represented in this document is consistent with the building plans, specifications, and other calculations submitted with this permit application. The proposed interior lighting systems have been designed to meet the 2021 IECC requirements in COMcheck Version COMcheckWeb and to comply with any applicable mandatory requirements listed in the Inspection Checklist.

Alexander Radkoff - Vice President | Alexander Radkoff | 09/22/2025
Name - Title | Signature | Date

1

COM*check* Software Version COMcheckWeb

Inspection Checklist

Energy Code: 2021 IECC

Requirements: 100.0% were addressed directly in the COM*check* software

Text in the "Comments/Assumptions" column is provided by the user in the COMcheck Requirements screen. For each requirement, the user certifies that a code requirement will be met and how that is documented, or that an exception is being claimed. Where compliance is itemized in a separate table, a reference to that table is provided.

Section # & Req.ID	Plan Review	Complies?	Comments/Assumptions
C103.2 [PR4][1]	Plans, specifications, and/or calculations provide all information with which compliance can be determined for the interior lighting and electrical systems and equipment and document where exceptions to the standard are claimed. Information provided should include interior lighting power calculations, wattage of bulbs and ballasts, transformers and control devices.	☐Complies ☐Does Not ☐Not Observable ☐Not Applicable	Requirement will be met.

Additional Comments/Assumptions:

1 High Impact (Tier 1) | 2 Medium Impact (Tier 2) | 3 Low Impact (Tier 3)

Section # & Req.ID	Rough-In Electrical Inspection	Complies?	Comments/Assumptions
C405.2.3.1 [EL22][1]	Spaces required to have light-reduction controls have a manual control that allows the occupant to reduce the connected lighting load in a reasonably uniform illumination pattern >= 50 percent.	☐Complies ☐Does Not ☐Not Observable ☐Not Applicable	Requirement will be met.
C405.2.1, C405.2.1.1 [EL18][1]	Occupancy sensors installed in classrooms/lecture/training rooms, conference/meeting/multipurpose rooms, copy/print rooms, lounges/breakrooms, enclosed offices, open plan office areas, restrooms, storage rooms, locker rooms, corridors, warehouse storage areas, and other spaces <= 300 sqft that are enclosed by floor-to-ceiling height partitions. Reference section language C405.2.1.2 for control function in warehouses and section C405.2.1.3 for open plan office spaces.	☐Complies ☐Does Not ☐Not Observable ☐Not Applicable	Requirement will be met.
C405.2.1.2 [EL19][1]	Occupancy sensors control function in warehouses: In warehouses, the lighting in aisleways and open areas is controlled with occupant sensors that automatically reduce lighting power by 50% or more within 20 minutes of when the areas are unoccupied. The occupant sensors control lighting in each aisleway independently and do not control lighting beyond the aisleway being controlled by the sensor. Lights not turned off by occupant sensors is done so by time-switch.	☐Complies ☐Does Not ☐Not Observable ☐Not Applicable	**Exception:** Requirement does not apply.
C405.2.1.3 [EL20][1]	Occupant sensor control function in open plan office areas: Occupant sensor controls in open office spaces >= 300 sq.ft. have controls 1) configured so that general lighting can be controlled separately in control zones with floor areas <= 600 sq.ft. within the space, 2) general lighting in each zone permitted to turn on upon occupancy in control zone, 3) automatically turn off general lighting in all control zones within 20 minutes after all occupants have left the space, 4) are configured so that general lighting power in each control zone is reduced by >= 80% of the full zone general lighting power within 20 minutes of all occupants leaving that control zone.	☐Complies ☐Does Not ☐Not Observable ☐Not Applicable	**Exception:** Requirement does not apply.
C405.2.2, C405.2.2.1 [EL21][2]	Each area not served by occupancy sensors (per C405.2.1.1) have time-switch controls and functions detailed in sections C405.2.2.1.	☐Complies ☐Does Not ☐Not Observable ☐Not Applicable	Requirement will be met.

1 High Impact (Tier 1) | 2 Medium Impact (Tier 2) | 3 Low Impact (Tier 3)

Section # & Req.ID	Rough-In Electrical Inspection	Complies?	Comments/Assumptions
C405.2.4, C405.2.4.1, C405.2.4.2 [EL23][2]	Daylight zones provided with individual controls that control the lights independent of general area lighting. See code section C405.2.3 Daylight-responsive controls for applicable spaces. C405.2.3.1 Daylight responsive control function and section C405.2.3.2 Sidelit zone.	☐Complies ☐Does Not ☐Not Observable ☐Not Applicable	**Exception:** Requirement does not apply.
C405.2.5 [EL27][1]	Additional interior lighting power allowed for special functions per the approved lighting plans and is automatically controlled and separated from general lighting.	☐Complies ☐Does Not ☐Not Observable ☐Not Applicable	Requirement will be met.
C405.7 [EL26][2]	Low-voltage dry-type distribution electric transformers meet the minimum efficiency requirements of Table C405.6.	☐Complies ☐Does Not ☐Not Observable ☐Not Applicable	**Exception:** Requirement does not apply.
C405.8 [EL27][2]	Electric motors meet the minimum efficiency requirements of Tables C405.7(1) through C405.7(4). Efficiency verified through certification under an approved certification program or the equipment efficiency ratings shall be provided by motor manufacturer (where certification programs do not exist).	☐Complies ☐Does Not ☐Not Observable ☐Not Applicable	Requirement will be met.
C405.9.1, C405.9.2 [EL28][2]	Escalators and moving walks comply with ASME A17.1/CSA B44 and have automatic controls configured to reduce speed to the minimum permitted speed in accordance with ASME A17.1/CSA B44 or applicable local code when not conveying passengers.	☐Complies ☐Does Not ☐Not Observable ☐Not Applicable	**Exception:** Requirement does not apply.
C405.10 [EL29][2]	Total voltage drop across the combination of feeders and branch circuits <= 5%.	☐Complies ☐Does Not ☐Not Observable ☐Not Applicable	Requirement will be met.
C405.1.1 [EL30][2]	At least 90% of dwelling unit permanently installed lighting shall have lamp efficacy >= 65 lm/W or luminaires with efficacy >= 45 lm/W or comply with C405.2.4 or C405.3.	☐Complies ☐Does Not ☐Not Observable ☐Not Applicable	**Exception:** Requirement does not apply.
C405.11, C405.11.1 [EL31][2]	50% of 15/20 amp receptacles installed in enclosed offices, conference rooms, copy rooms, break rooms, classrooms and workstations and > 25% of branch circuit feeders for modular furniture will have automatic receptacle control in accordance with C405.11.1.	☐Complies ☐Does Not ☐Not Observable ☐Not Applicable	**Exception:** Requirement does not apply.

Additional Comments/Assumptions:

1 High Impact (Tier 1) | 2 Medium Impact (Tier 2) | 3 Low Impact (Tier 3)

Section # & Req.ID	Final Inspection	Complies?	Comments/Assumptions
C303.3, C408.2.5.2 [FI17][1]	Furnished O&M instructions for systems and equipment to the building owner or designated representative.	☐Complies ☐Does Not ☐Not Observable ☐Not Applicable	Requirement will be met.
C408.1.1 [FI57][1]	Building operations and maintenance documents will be provided to the owner. Documents will cover manufacturers' information, specifications, programming procedures and means of illustrating to owner how building, equipment and systems are intended to be installed, maintained, and operated.	☐Complies ☐Does Not ☐Not Observable ☐Not Applicable	Requirement will be met.
C408.2.5 [FI16][1]	Furnished as-built drawings for electric power systems within 90 days of system acceptance.	☐Complies ☐Does Not ☐Not Observable ☐Not Applicable	Requirement will be met.
C408.3 [FI33][1]	Lighting systems have been tested to ensure proper calibration, adjustment, programming, and operation.	☐Complies ☐Does Not ☐Not Observable ☐Not Applicable	Requirement will be met.

Additional Comments/Assumptions:

1 High Impact (Tier 1) | 2 Medium Impact (Tier 2) | 3 Low Impact (Tier 3)

8/24/2025 4:52:45 PM

VILLAGE OF OAK PARK
CONSTRUCTION DOCUMENT(S)
REVIEWED FOR COMPLIANCE
KEEP A PRINTED APPROVED COPY OF THE PLANS ON SITE AT ALL TIMES FOR CONTRACTORS AND INSPECTORS

625 W Adams Street – 19th Floor
Chicago, IL 60661
312.320.3668

LICENSED PROFESSIONAL ARCHITECT
ALEXANDER G. RADKOFF
062-073334
OF ILLINOIS

DESIGN FIRM LIC. NO: 184008703-002
DESIGN FIRM LIC. NO. EXP.: 04.30.2027
ILLINOIS LICENCE NUMBER: 062.073334
LIC. EXP.: 11.30. 2025

1144 Lake Street, LLC

BASE BUILDING MECHANICAL RENOVATIONS

1144 W LAKE ST
OAK PARK, IL 60301

NO.	DESCRIPTION	DATE
1	PERMIT REVISION 1	09/19/2025
1	ISSUED FOR PERMIT	08/25/2025

JOB NO.: 25.068

SCALE: AS SHOWN

TITLE: ELECTRICAL COMCHECK

SHEET: E7.1

GENERAL MECHANICAL NOTES (ALL DRAWINGS):

1. MECHANICAL CONTRACTOR SHALL PROVIDE ALL MATERIALS AND EQUIPMENT AND PERFORM ALL LABOR REQUIRED TO INSTALL COMPLETE AND OPERABLE HVAC SYSTEMS AS INDICATED ON THE DRAWINGS, AS SPECIFIED AND REQUIRED BY CODE.
2. THE CONTRACT DOCUMENT DRAWINGS ARE DIAGRAMMATIC ONLY, AND ARE INTENDED TO CONVEY THE SCOPE AND GENERAL ARRANGEMENT OF WORK.
3. ALL DIMENSIONS AND EXISTING CONDITIONS SHALL BE VERIFIED BY THE CONTRACTOR BY FIELD INSPECTION PRIOR TO BIDDING. ANY INTERFERENCES TO INSTALLATION SHALL BE NOTED AND THE CONTRACTOR SHALL INCLUDE IN HIS BID PRICE THE COST TO AVOID OR RELOCATE ALL ITEMS, INCLUDING ITEMS OF OTHER TRADES, THAT INTERFERE. ALL WORK SHALL BE COORDINATED WITH ALL TRADES INVOLVED. ALL OFFSETS, RISES, TRANSITIONS AND DROPS IN DUCTS AND PIPING AROUND OBSTRUCTIONS SHALL BE PROVIDED AT NO ADDITIONAL COST TO THE OWNER.
4. VERIFY ALL EQUIPMENT CONNECTIONS WITH MANUFACTURERS' CERTIFIED DRAWINGS. VERIFY AND PROVIDE DUCT TRANSITIONS OR PIPE ADAPTERS TO FURNISHED EQUIPMENT. FIELD VERIFY AND COORDINATE ALL DIMENSIONS BEFORE FABRICATION.
5. PROVIDE ACCESS IN WALLS & CEILINGS TO ACCESS ALL EQUIPMENT, VALVES, CONTROL DEVICES, VOLUME DAMPERS, AND FIRE/SMOKE DAMPERS.
6. FOLLOW MANUFACTURE'S RECOMMENDATIONS FOR INSTALLATION OF EQUIPMENT. ALSO REFER TO TYPICAL DETAILS FOR INSTALLATION OF EQUIPMENT.
7. ALL MATERIALS FURNISHED, AND ALL WORK PERFORMED BY THE MECHANICAL CONTRACTOR SHALL BE IN ACCORDANCE WITH ALL APPLICABLE CODES AND REGULATIONS, INCLUDING BUT NOT LIMITED TO THE LATEST APPLICABLE EDITIONS OF NFPA, IEEE, OSHA, SMACNA, INTERNATIONAL MECHANICAL CODE, INTERNATIONAL BUILDING CODE, AND ANY STATE, COUNTY, AND LOCAL CODES.
8. ALL EQUIPMENT, DUCTWORK, ETC., SHALL BE SUPPORTED SUFFICIENTLY AND ANY ADDITIONAL SUPPORT SHALL BE PROVIDED AS REQUIRED TO PROVIDE VIBRATION FREE AND SAFE INSTALLATION. ALL MISCELLANEOUS STEEL REQUIRED AND/OR AS SHOWN IN DETAILS FOR DUCTWORK, AND EQUIPMENT (UNLESS OTHERWISE NOTED) SHALL BE FURNISHED AND INSTALLED BY THE MECHANICAL CONTRACTOR. SUPPORT ALL DUCTWORK, PIPING AND EQUIPMENT MOUNTED ABOVE THE CEILING DIRECTLY FROM THE STRUCTURE. ALL ATTACHMENTS TO BEAMS, TRUSSES, OR JOIST SHALL BE MADE AT PANEL POINTS WITH BEAM CLAMPS MEETING MSS STANDARDS.
9. ALL CONTROL WIRE AND CONDUIT SHALL COMPLY WITH NEC AND ELECTRICAL SPECIFICATIONS FOR THIS PROJECT.

DUCTWORK GENERAL NOTES (ALL DRAWINGS):

1. ALL DUCTWORK INDICATED IS SCHEMATIC AND SHOW ONLY RELATIVE POSITIONS. PROVIDE OFFSETS, RISES, TRANSITIONS AND ELBOWS AS NEEDED TO INSTALL PROPERLY.
2. PROVIDE ACCESS DOORS IN DUCTWORK FOR OPERATION, ADJUSTMENT, AND MAINTENANCE OF ALL HVAC DEVICES, FANS, DAMPERS, (FIRE, SMOKE, BALANCING) COILS, AND TERMINAL EQUIPMENT.
3. LOCATIONS OF TERMINAL DEVICES, AIR OUTLETS AND INLETS ARE APPROXIMATE. LOCATE PER THE ARCHITECTURAL DRAWINGS AND TO AVOID OTHER TRADE'S WORK. COORDINATE LOCATIONS WITH OTHER TRADES. CONSULT ARCHITECT/ENGINEER FOR CLARIFICATION IF CONFLICTS OCCUR.
4. DUCT DIMENSIONS SHOWN ARE CLEAR INSIDE FACE-TO-FACE DIMENSIONS AND DO NOT INCLUDE DUCT LINER WHERE SPECIFIED. INCREASE DIMENSIONS OF LINED DUCTWORK TO PROVIDE FREE INSIDE AREA EQUAL DIMENSIONS SHOWN. REFER TO THE SPECIFICATIONS FOR LOCATION OF LINED DUCTWORK.
5. FINAL CONNECTIONS FROM HIGH VELOCITY MAIN DUCTS TO AIR TERMINAL UNITS SHALL BE MADE WITH FLEXIBLE DUCTWORK NOT EXCEEDING 3 FEET IN LENGTH. CONNECTIONS BETWEEN LOW VELOCITY DUCTWORK AND/OR TERMINAL UNITS TO AIR INLETS AND OUTLETS SHALL BE MADE WITH FLEXIBLE DUCTWORK NOT EXCEEDING 6 FEET IN LENGTH. LONGER DUCT RUN OUTS SHALL BE CONSTRUCTED OF HARD DUCT OF THE SAME MATERIAL SPECIFIED FOR THE SYSTEM SERVED AND INSULATED AS SPECIFIED FOR THAT SYSTEM. FLEXIBLE DUCTWORK SHALL BE OF THE PRESSURE CLASS AND FACTORY INSULATED AS SPECIFIED FOR THE SYSTEM WHERE INSTALLED.
6. FLEXIBLE DUCTWORK SHALL BE INSTALLED IN ACCORDANCE WITH THE MANUFACTURER'S INSTRUCTIONS WITHOUT ANY SAGS, SHARP TURNS OR KINKS. AT THE MINIMUM, THE FLEXIBLE DUCTWORK SHALL BE FASTENED TO THE HARD DUCT BY A NYLON STRAP SECURED BY SHEETMETAL SCREWS TO PREVENT SLIPPING OFF FROM COLLAR.
7. PROVIDE VOLUME DAMPERS AT EACH AIR OUTLET, AIR INLET AND TERMINAL DEVICE AND AT EACH BRANCH TAKE-OFF CONNECTION FROM THE MAIN.

MECHANICAL PIPING GENERAL NOTES (ALL DRAWINGS):

1. ALL PIPING SHOWN HAS BEEN DRAWN SCHEMATICALLY FOR CLARITY AND SHOW ONLY RELATIVE POSITIONS. PROVIDE OFFSETS AND ELBOWS AS NEEDED TO INSTALL PROPERLY AND TO AVOID INTERFERENCES.
2. ALL NEW OR REPLACED HYDRONIC PIPING SHALL BE INSTALLED SO THAT IT CAN BE COMPLETELY VENTED AT HIGH POINTS AND DRAINED AT LOW POINTS. PROVIDE AIR VENTS AT HIGH POINTS, TYPE PER SPECIFICATIONS. PROVIDE 1/2" BALL VALVES WITH HOSE END CONNECTIONS AND CAPS AT LOW POINT. ALL WATER MAINS SHALL BE INSTALLED LEVEL, UNLESS OTHERWISE NOTES.
3. PROVIDE SERVICE VALVES AT EACH BRANCH CONNECTION FROM MAINS AND AT EACH TERMINAL DEVICE OR EQUIPMENT CONNECTION.
4. CONTRACTOR SHALL PROVIDE NEW VALVES ON EXISTING PIPING WHERE THE PIPES ARE TO BE REMOVED SO THAT THE SYSTEM DOES NOT HAVE TO BE DRAINED WHILE REMOVING EXISTING UNITS, INSTALLING NEW UNITS AND MAKING CONNECTIONS TO NEW EQUIPMENT.

MECHANICAL DEMOLITION GENERAL NOTES (ALL DRAWINGS):

1. DEMOLITION DRAWINGS ARE BASED ON EXISTING PLANS AND FIELD INVESTIGATION PRIOR TO DEMOLITION. VISIT THE SITE PRIOR TO BID IN ORDER TO BECOME FAMILIAR WITH THE EXISTING CONDITIONS AND IN ORDER TO AVOID CONFLICTS.
2. ALL ITEMS SHOWN DASHED ON DEMOLITION PLANS ARE EXISTING AND SHALL BE REMOVED INCLUDING PIPING, DUCTWORK, HANGERS, FASTENERS, CONTROLS, AND ASSOCIATED APPURTENANCES UNLESS OTHERWISE NOTED.
3. ALL ITEMS SHOWN SOLID ON DEMOLITION PLANS ARE EXISTING TO REMAIN UNLESS OTHERWISE NOTED.
4. EXERCISE CARE IN REMOVAL OF DEMOLITION ITEMS. REPAIR, AT NO ADDITIONAL COST TO OWNER, ANY DAMAGE CAUSED TO EXISTING CONSTRUCTION AND/OR EQUIPMENT TO REMAIN.

MECHANICAL LEGEND

SYMBOL	ABRV.	DESCRIPTION
	EX	EXISTING EQUIPMENT OR DUCTWORK TO REMAIN
	RX	EXISTING EQUIPMENT OR DUCTWORK TO BE REMOVED
		NEW EQUIPMENT OR DUCTWORK
		LINED DUCTWORK
		SUPPLY DUCT UP
		SUPPLY DUCT DOWN
		RETURN DUCT UP
		RETURN DUCT DOWN
		EXHAUST DUCT UP
		EXHAUST DUCT DOWN
		ROUND DUCT ELBOW UP
		ROUND DUCT ELBOW DOWN
		ELBOW WITH TURNING VANES
R		DUCT OFFSET - RISE
D		DUCT OFFSET - DROP
		SQUARE / RECTANGULAR DUCT TRANSITION
		SQUARE/RECTANGULAR TO ROUND DUCT TRANSITION
	SD	SUPPLY DIFFUSER - MULTI-DIRECT.
		SUPPLY DIFFUSER - DIRECT. (HATCH DENOTES BLANK OFF)
	SG/EG	SIDEWALL SUPPLY or RETURN GRILLE - (R = REGISTER)
	LD	LINEAR DIFFUSER. SEE SCHEDULE FOR INFORMATION.
	RG/EG	RETURN GRILLE - (R = REGISTER)
	EG	EXHAUST GRILLE - (R = REGISTER)
		FLEXIBLE DUCT
	FLEX	FLEXIBLE DUCT CONNECTION (TO EQUIPMENT)
AD	AD	DUCT ACCESS DOOR
	VD	VOLUME CONTROL DAMPER
BD	BD	BACKDRAFT DAMPER
M	MD	MOTORIZED DAMPER
AP		ACCESS PANEL
	FD	VERTICAL FIRE DAMPER (WALL)
	SD	VERTICAL SMOKE DAMPER (WALL)
	FD/SD	COMBINATION VERTICAL FIRE & SMOKE DAMPER
	HSD	HORIZONTAL SMOKE DAMPER (FLOOR)
	FD/SD	HORIZONTAL FIRE DAMPER (FLOOR)
	HFD/SD	COMBINATION HORIZONTAL FIRE & SMOKE DAMPER
	RD	CEILING RADIATION FIRE DAMPER
DD	DD	DUCT SMOKE DETECTOR
T		THERMOSTAT
H		HUMIDISTAT
TH		COMBINATION THERMOSTAT & HUMIDISTAT
SP		STATIC PRESSURE SENSOR
CO_2		CARBON DIOXIDE SENSOR
CO		CARBON MONOXIDE SENSOR
S		TEMPERATURE SENSOR
S		STARTER
OS		OCCUPANCY SENSOR
R		REFRIGERANT DETECTOR
U	UC	UNDER CUT DOOR - 1"
L		LOUVERED DOOR

SYMBOL	ABRV.	DESCRIPTION
		CONNECTION POINT, NEW TO EXISTING
		DISCONNECTION POINT
1		DRAWING KEYNOTE
A		DEMOLITION DRAWING KEYNOTE
1		REVISION NUMBER
		REVISION CLOUD
		PIPE UP
		PIPE DOWN
		PIPE TEE DOWN
		TOP PIPE CONNECTION
		BALL VALVE OR SHUTOFF VALVE IN RISE
		PIPE CAP
		PIPE UNION
		FLANGED CONNECTION
		CONCENTRIC PIPE REDUCER
		ECCENTRIC PIPE REDUCER
		FLOW ARROW
		PIPE ANCHOR
		PIPE GUIDE
	BV	BALL VALVE
	BFV	BUTTERFLY VALVE
	PV	PLUG VALVE
	GV	GATE VALVE
	GBV	GLOBE VALVE
	PRV	PRESSURE REDUCING VALVE
	CV	CHECK VALVE
	BFP	BACKFLOW PREVENTER
		PRESSURE RELIEF VALVE
		AUTOMATIC FLOW CONTROL VALVE
		CALIBRATED BALANCING VALVE
		AUTOMATIC AIR VENT
		MANUAL AIR VENT
		P/T PLUG
		PRESSURE GAGE W/ SHUT-OFF
		THERMOMETER
		STRAINER (W/ BALL VALVE AND CAP)
		HOSE BIBB
		FLEXIBLE CONNECTOR
		2-WAY CONTROL VALVE
		3-WAY CONTROL VALVE
		TRIPLE DUTY VALVE WITH MEASURING CONNECTIONS
		INVERTED BUCKET STEAM TRAP
		FLOAT & THERMOSTATIC STEAM TRAP
	RA / EA	RETURN OR EXHAUST AIR
	SA / OA	SUPPLY OR OUTSIDE AIR
TYP #		EQUIPMENT UNIT DESIGNATION
TAG CFM		DIFFUSER, REGISTER & GRILLE UNIT DESIGNATION W/ CFM

SYMBOL	ABRV.	DESCRIPTION
— EX (X) —	EX	EXISTING PIPING TO REMAIN - (X) DESIGNATES SERVICE
— RX (X) —	RX	EXISTING PIPING TO BE REMOVED - (X) DESIGNATES SERVICE
— HWS —	HWS	HEATING WATER SUPPLY PIPING
— HWR —	HWR	HEATING WATER RETURN PIPING
— CWS —	CWS	CONDENSER WATER SUPPLY PIPING
— CWR —	CWR	CONDENSER WATER RETURN PIPING
— CHWS —	CHWS	CHILLED WATER SUPPLY PIPING
— CHWR —	CHWR	CHILLED WATER RETURN PIPING
— LPS —	LPS	LOW PRESSURE STEAM SUPPLY PIPING (0-15 PSIG)
— LPR —	LPR	LOW PRESSURE STEAM CONDENSATE RETURN
— MPS —	MPS	MEDIUM PRESSURE STEAM SUPPLY PIPING (16-60 PSIG)
— MPR —	MPR	MEDIUM PRESSURE STEAM CONDENSATE RETURN
— HPS —	HPS	HIGH PRESSURE STEAM SUPPLY PIPING (61 TO 200 PSIG)
— HPR —	HPR	HIGH PRESSURE STEAM CONDENSATE RETURN
— GWS —	GWS	GLYCOL WATER SUPPLY
— GWR —	GWR	GLYCOL WATER RETURN
— RL —	RL	REFRIGERANT LIQUID PIPING
— RS —	RS	REFRIGERANT SUCTION PIPING
— FOS —	FOS	FUEL OIL SUPPLY PIPING
— FOR —	FOR	FUEL OIL RETURN PIPING
— CW —	CW	CITY (DOMESTIC) WATER
— PC —	PC	PUMPED STEAM CONDENSATE
— D —	D	CONDENSATE DRAIN PIPING
— V —	V	VENT PIPING
— G —	G	NATURAL GAS PIPING

MECHANICAL ABBREVIATIONS

ABRV.	DESCRIPTION
HVAC	HEATING, VENTILATION AND AIR CONDITIONING
SA	SUPPLY AIR
RA	RETURN AIR
EA	EXHAUST AIR
OA	OUTSIDE AIR
TA	TRANSFER AIR
MA	MIXED AIR
MBH	1000 - BRITISH THERMAL UNITS
kW	1000-WATT (1 KW = 3,412 BTUH)
SENS.	SENSIBLE
LAT.	LATENT
E.A.T.	ENTERING AIR TEMPERATURE
L.A.T.	LEAVING AIR TEMPERATURE
E.W.T.	ENTERING WATER TEMPERATURE
L.W.T.	LEAVING WATER TEMPERATURE
DB/WB	DRY BULB / WET BULB
IN. W.G.	INCHES WATER GAUGE (AIR)
FT. W.G.	FEET WATER GAUGE (HYDRONIC)
E.S.P.	EXTERNAL STATIC PRESSURE
T.S.P.	TOTAL STATIC PRESSURE
TG	TRANSFER GRILLE
TR	TOP REGISTER
°F	FAHRENHEIT
EX	EXISTING
RL	RELOCATE EXISTING
UNO	UNLESS NOTED OTHERWISE
NTS	NOT TO SCALE
NIC	NOT IN CONTRACT
PH	PHASE
HZ	HERTZ
Ø	DIAMETER
AFF	ABOVE FINISHED FLOOR
ELEV.	ELEVATION FROM DATUM
FLA	FULL LOAD AMPS
MCA	MINIMUM CIRCUIT AMPACITY
MOCP	MAXIMUM OVERCURRENT PROTECTION

NOTES: 1. NOT ALL SYMBOLS AND ABBREVIATIONS ARE IN USE FOR THIS PROJECT.

VILLAGE OF OAK PARK
CONSTRUCTION DOCUMENT(S)
REVIEWED FOR COMPLIANCE
KEEP A PRINTED APPROVED COPY OF THE PLANS ON SITE AT ALL TIMES FOR CONTRACTORS AND INSPECTORS

625 W Adams Street – 19th Floor
Chicago, IL 60661
312.320.3668

LICENSED PROFESSIONAL ENGINEER
ALEXANDER G. RADKOFF
062-073334
OF ILLINOIS

DESIGN FIRM LIC. NO: 184008703-002
DESIGN FIRM LIC. NO. EXP.: 04.30.2027
ILLINOIS LICENCE NUMBER: 062.073334
LIC. EXP.: 11.30. 2025

1144 Lake Street, LLC

BASE BUILDING MECHANICAL RENOVATIONS

1144 W LAKE ST
OAK PARK, IL 60301

NO.	DESCRIPTION	DATE
2	PERMIT REVISION 1	09/19/2025
1	ISSUED FOR PERMIT	08/28/2025

JOB NO.: 25.068

SCALE: AS SHOWN

TITLE: MECHANICAL DATA SHEET

SHEET: M0.1

8/24/2025 4:52:45 PM

MECHANICAL SPECIFICATIONS

MECHANICAL GENERAL CONDITIONS (230010)

CODES AND STANDARDS - THE EFFECTIVE PUBLICATIONS OF ALL APPLICABLE STANDARDS, CODES, ETC., AS ADOPTED BY THE AUTHORITY HAVING JURISDICTION, STATE AND LOCAL GOVERNMENTS, AS THEY APPLY, FORM PART OF THESE SPECIFICATIONS AS IF WERE WRITTEN FULLY HEREIN AND CONSTITUTE MINIMUM REQUIREMENTS. THE FOLLOWING WILL BE REFERRED TO THROUGHOUT IN ABBREVIATED FORMS.

2021 INTERNATIONAL BUILDING CODE (IBC) WITH OAK PARK LOCAL AMENDMENTS (EFFECTIVE 01-01-2025)
2021 INTERNATIONAL EXISTING BUILDING CODE (IEBC) WITH OAK PARK LOCAL AMENDMENTS (EFFECTIVE 01-01-2025)
2021 INTERNATIONAL MECHANICAL CODE (IMC) WITH OAK PARK LOCAL AMENDMENTS (EFFECTIVE 01-01-2025)
2014 STATE OF ILLINOIS PLUMBING CODE WITH OAK PARK LOCAL AMENDMENTS (EFFECTIVE 03-18-2025)
2021 INTERNATIONAL FUEL GAS CODE (IFGC) WITH OAK PARK LOCAL AMENDMENTS (EFFECTIVE 01-01-2025)
2021 INTERNATIONAL ENERGY CONSERVATION CODE (IECC) (EFFECTIVE 01-01-2025) 1
2020 NATIONAL ELECTRIC CODE (NEC) WITH OAK PARK LOCAL AMENDMENTS (EFFECTIVE 01-01-2025)
INSTITUTE OF ELECTRICAL AND ELECTRONIC ENGINEERS (IEEE).
THE AMERICANS WITH DISABILITIES ACT (ADA).
APPLICABLE STANDARDS OF UNDERWRITER'S LABORATORIES, INC. (UL).
APPLICABLE STANDARDS OF NATIONAL FIRE PROTECTION ASSOCIATION (NFPA).
UNDERWRITERS LABORATORY (UL), IRI, FM
AMERICAN NATIONAL STANDARDS INSTITUTE (ANSI) APPLICABLE STATE AND LOCAL CODES.
APPLICABLE STATE AND LOCAL CODES.
SMACNA "HVAC DUCT CONSTRUCTION STANDARDS" GUIDELINES, DETAILS, & MODEL SPECIFICATION"
ASHRAE

A. WHERE CONFLICTS EXIST BETWEEN CODES, STANDARDS OR THIS SPECIFICATION THE HIGHER REQUIREMENT SHALL APPLY. DEVIATIONS FROM THE CONTRACT DOCUMENTS REQUIRED BY THE ABOVE AUTHORITIES SHALL BE SUBMITTED TO THE ENGINEER FOR REVIEW. OBTAIN PERMITS AND PAY ALL FEES. ARRANGE FOR ALL REQUIRED INSPECTIONS AND APPROVALS. CONFIRM ALL UTILITY COMPANY REQUIREMENTS AND CONNECTION POINTS IN FIELD, PRIOR TO STARTING WORK. CONFORM TO ALL GENERAL AND SPECIAL CONDITIONS OF CONTRACT AS SPECIFIED BY ARCHITECT AND/OR OWNER.

B. ALL SPECIFICATIONS AND DRAWINGS, I.E., ARCHITECTURAL, MECHANICAL, PLUMBING, AND ELECTRICAL ARE COMPLIMENTARY AND MUST BE USED IN COMBINATION TO OBTAIN COMPLETE CONSTRUCTION INFORMATION. ANY INFORMATION CONFLICTS WITHIN THE SPECIFICATIONS AND DRAWINGS SHALL BE BROUGHT TO THE ENGINEER'S ATTENTION. DRAWINGS ARE DIAGRAMMATIC. CONFIRM ALL DIMENSIONS BY FIELD MEASUREMENT. THE EXACT LOCATIONS FOR APPARATUS, FIXTURES, EQUIPMENT AND PIPING WHICH IS NOT COVERED BY DRAWINGS, SHALL BE OBTAINED FROM THE ARCHITECT OR HIS REPRESENTATIVE IN THE FIELD, AND THE WORK SHALL BE LAID OUT ACCORDINGLY.

C. EACH CONTRACTOR SHALL PROVIDE FOR HIS OWN CLEAN-UP, REMOVAL AND LEGAL DISPOSAL OF ALL RUBBISH DAILY. CONTRACTOR SHALL PROTECT THEIR WORK AND EXISTING OR ADJACENT PROPERTY AGAINST WEATHER, TO MAINTAIN THEIR WORK, MATERIALS, APPARATUS AND FIXTURES FREE FROM INJURY OR DAMAGE. ANY WORK DAMAGED BY FAILURE TO PROVIDE PROTECTION REQUIRED, SHALL BE REMOVED AND REPLACED WITH NEW WORK AT THE CONTRACTOR'S EXPENSE.

D. THE CONTRACTOR SHALL BE SOLELY RESPONSIBLE FOR CONSTRUCTION MEANS, METHODS, SEQUENCES OF CONSTRUCTION AND THE SAFETY OF WORKMEN.

E. NO MEP, IT, FP SYSTEMS OR COMPONENTS SHALL BE INSTALLED OR ROUTED ABOVE ELECTRICAL PANELS AND EQUIPMENT OR THROUGH ELEVATOR ROOMS, FIREPUMP ROOMS, OR STAIRTOWERS UNLESS SERVING THE MACHINE ROOM, FIREPUMP ROOM OR STAIRTOWER.

F. THE CONTRACTOR SHALL COORDINATE AND OBTAIN A WRITTEN LISTING OF ELECTRICAL CHARACTERISTICS OF ALL MECHANICAL EQUIPMENT FROM ELECTRICAL CONTRACTOR PRIOR TO ORDERING OF EQUIPMENT. NO ADDITIONAL PAYMENT WILL BE MADE FOR LACK OF CONTRACTOR COORDINATION OF ELECTRICAL CHARACTERISTICS.

G. IN CASES OF DOUBT AS TO THE WORK INTENDED, OR IN THE EVENT OF NEED FOR EXPLANATION THEREOF, THE CONTRACTOR SHALL REQUEST SUPPLEMENTARY INSTRUCTIONS FROM THE ENGINEER. NO CHANGES ARE TO BE MADE TO THE WORK OF THIS CONTRACT WITHOUT PRIOR KNOWLEDGE AND APPROVAL OF THE ENGINEER. THE CONTRACTOR SHALL HOLD THE OWNER AND ITS CONSULTANTS HARMLESS AGAINST ALL CLAIMS AND JUDGMENTS ARISING OUT OF THE CONTRACTOR'S PERFORMANCE OF THE WORK OF THIS CONTRACT. THE CONTRACTOR SHALL NOT PROCEED WITH ANY WORK, WHICH HE EXPECTS ADDITIONAL COMPENSATION BEYOND THE CONTRACT AMOUNT, WITHOUT WRITTEN AUTHORIZATION FROM THE APPROPRIATE AUTHORITY. FAILURE TO OBTAIN SUCH AUTHORIZATION SHALL INVALIDATE ANY CLAIM FOR EXTRA COMPENSATION.

H. IT SHALL BE THE RESPONSIBILITY OF THIS CONTRACTOR TO INSTALL THE HEATING, VENTILATION AND AIR CONDITIONING SYSTEM SO AS TO INSURE QUIET OPERATION. NO VIBRATION OR SOUND SHALL BE TRANSMITTED TO THE BUILDING, STRUCTURE OR OCCUPIED AREAS. THE DECISION OF THE ENGINEER AS TO THE QUIETNESS OF THE SYSTEM AND EQUIPMENT SHALL BE FINAL. IT SHALL BE THIS CONTRACTORS RESPONSIBILITY TO CORRECT OR REPLACE ANY NOISY SYSTEM OR EQUIPMENT AS REQUIRED.

I. OBTAIN PERMITS AND PAY ALL FEES. ARRANGE FOR ALL REQUIRED INSPECTIONS AND APPROVALS.

J. WORK IN EXISTING BUILDINGS:

1. EXISTING BUILDING IS TO REMAIN OCCUPIED AND ACCESSIBLE AT ALL TIMES. PROTECT THE BUILDING PREMISES AND ALL OCCUPANTS ON THE PROJECT SITE. THE CONTRACTOR IS RESPONSIBLE FOR ALL DAMAGES CAUSED BY IMPROPER PROTECTION AND SHALL MAKE ALL NECESSARY REPLACEMENTS OR REPAIRS WITHOUT ANY ADDITIONAL COST. MAKE ALL ARRANGEMENTS, MAINTAIN AND PAY ALL COSTS FOR TEMPORARY WATER, PLUMBING, POWER, LIGHTING, AND HEATING OR VENTILATION AS REQUIRED TO PROPERLY CONDUCT THE WORK OF THIS CONTRACT AND MAINTAIN SERVICES. PROVIDE AND MAINTAIN FOR THE ENTIRE LENGTH OF THIS CONTRACT ALL EXITS, EXIT LIGHTING, FIRE PROTECTION DEVICES AND ALARMS TO CONFORM TO LOCAL BUILDING CODE REQUIREMENTS.
2. CONFORM WITH THE CURRENT EDITION OF THE SMACNA "IAQ GUIDELINES FOR OCCUPIED BUILDINGS UNDER CONSTRUCTION."
3. CONTRACTOR SHALL VERIFY ALL POINTS OF CONNECTION BEFORE COMMENCING WORK. CONTRACTOR SHALL COORDINATE WORK WITH EXISTING WORK AND OTHER TRADES. ALL UNUSED EQUIPMENT SERVING THIS AREA SHALL BE REMOVED AND RETURNED TO THE OWNER.
4. EXISTING EQUIPMENT TO REMAIN, BE REUSED, OR RELOCATED WITHIN OR SERVING THE SPACE, WHICH IS DAMAGED OR DOES NOT COMPLY WITH THE SPECIFICATIONS, SHALL BE RESTORED TO LIKE NEW CONDITION SUBJECT TO REVIEW BY THE ARCHITECT AND ENGINEER, OR SHALL BE REPLACED WITH NEW MATERIALS MEETING THE SPECIFICATION REQUIREMENTS.
5. SOME WORK SHOWN MAY REQUIRE PREMIUM TIME INCLUDING NOISE PRODUCING ACTIVITIES, ACCESS INTO ADJOINING SPACES & ACTIVITIES DISRUPTING MEP SERVICES. CONFIRM THE REQUIREMENTS FOR PREMIUM TIME OR SPECIAL PROCEDURES WITH THE OWNER/LANDLORD AND INCLUDE THE COST IN BID PROPOSAL. WORK RELATED TO THE EXISTING BUILDING SHALL BE COORDINATED TO MINIMIZE INTERFERENCE OR INTERRUPTION OF NORMAL BUILDING USE BY OWNER. REFER TO ARCHITECTURAL PLANS FOR ANY PHASING REQUIREMENTS. ARRANGE FOR AND OBTAIN OWNER'S PERMISSION FOR ANY SERVICE SHUTDOWNS.
6. THE CONTRACTOR, BY SUBMITTING HIS BID PROPOSAL AGREES TO ACCEPT ALL EXISTING SITE CONDITIONS NOT SPECIFICALLY EXCEPTED. ALL EXCEPTIONS SHALL BE PROVIDED IN WRITING TO THE ARCHITECT AND ENGINEER.
7. PERFORM ROUTINE SERVICE INSPECTION OF ALL EXISTING HVAC UNITS TO BE REUSED FOR THIS PROJECT. LUBRICATE BEARINGS, SERVICE CONTROL SYSTEMS, REPLACE FAN BELTS AND INSTALL NEW FILTERS IN EACH UNIT. FIELD VERIFY REFRIGERANT CHARGE AND NOTIFY OWNER IF THE CHARGE IS LESS THAN MANUFACTURER'S SPECIFICATIONS. SUBMIT SERVICE REPORT TO OWNER/TENANT INDICATING CONDITION OF UNIT AND REPORT ANY MAJOR COMPONENT FAILURES OR MALFUNCTIONS. REPORT SHALL INCLUDE COST TO SERVICE ALL ITEMS ABOVE AND BEYOND THE ITEMS LISTED ABOVE. COST SHALL INCLUDE PARTS AND LABOR. EQUIPMENT SHALL BE PLACED IN FULL OPERATION WITH CONTROLS CALIBRATED UPON COMPLETION OF PROJECT.

K. DEMOLITION:

1. DISCONNECT, DISASSEMBLE, CAP, PLUG AND REMOVE ALL MEP ELEMENTS (PIPING, DUCTS, ELECTRICAL DEVICES, WIRING, CONDUIT, EQUIPMENT, HANGERS, SUPPORTS, ETC.) INDICATED ON THE DRAWINGS OR NOT OTHERWISE REQUIRED FOR COMPLETED PRODUCT. NO MEP ELEMENTS ARE TO BE ABANDONED IN PLACE UNLESS SPECIFICALLY NOTED. NOT ALL ITEMS TO BE REMOVED ARE INDICATED ON DRAWING.
2. ALL OPENINGS ON PIPING AND DUCTS THAT REMAIN SHALL BE CAPPED AND PROPERLY SECURED. WIRING SHALL BE DISCONNECTED AT CIRCUIT BREAKERS AND REMOVED AND BREAKERS MARKED "SPARE." REMOVE AND RECLAIM ANY REFRIGERANT IN EXISTING SYSTEMS PRIOR TO DEMOLITION OF ANY EQUIPMENT ACCORDING TO FEDERAL REQUIREMENT.
3. ANY EQUIPMENT DESIGNATED BY OWNER TO BE SALVAGED SHALL BE PROTECTED AND DELIVERED TO AN OWNER DESIGNATED AREA ON SITE.
4. ALL ASBESTOS REMOVAL (IF REQUIRED) WILL BE HANDLED BY THE OWNER AND IS NOT A PART OF THIS WORK. IF MATERIALS SUSPECTED OF CONTAINING HAZARDOUS MATERIALS ARE ENCOUNTERED, DO NOT DISTURB; NOTIFY ARCHITECT AND OWNER IMMEDIATELY.

L. BASIS OF DESIGN AND SUBSTITUTIONS:

1. WHEREVER THE WORDS "APPROVED BY", "APPROVED EQUAL", "AS DIRECTED" OR SIMILAR PHRASES ARE USED IN THE FOLLOWING SPECIFICATIONS, THEY SHALL BE UNDERSTOOD TO REFER TO THE OWNER AS THE APPROVING AGENCY. THE NAME OR MAKE OF ANY EQUIPMENT OR MATERIALS NAMED IN THE SPECIFICATION (WHETHER OR NOT THE WORDS "OR APPROVED EQUAL" ARE USED) SHALL BE KNOWN AS THE "STANDARD".
2. SUBMIT SHOP DRAWINGS FOR MECHANICAL EQUIPMENT, FIRE PROTECTION SYSTEMS, DUCTWORK, AND PLUMBING FIXTURES AND EQUIPMENT WITH ADEQUATE DETAILS AND SCALES TO CLEARLY SHOW CONSTRUCTION. INDICATE THE OPERATING CHARACTERISTICS FOR EACH REQUIRED ITEM. CLEARLY IDENTIFY EACH ITEM ON THE SUBMITTAL AS TO MARK, LOCATION AND USE, USING SAME IDENTIFICATION AS PROVIDED ON DESIGN DRAWINGS. SHOP DRAWINGS TO BE SUBMITTED INCLUDE BUT NOT LIMITED TO:
   a. SHEETMETAL
   b. DIFFUSERS, GRILLES & REGISTERS
   c. FIRE DAMPERS
   d. VALVES & PIPING
   e. ALL EQUIPMENT
   f. DUCTWORK AND FIRE PROTECTION DRAWINGS SHALL BE FULLY DIMENSIONED BASED ON FIELD VERIFIED BUILDING CLEARANCES AND ARCHITECTURAL CEILING LAYOUTS, AND INDICATE STRUCTURAL, LIGHTING, DUCTWORK AND PIPING AT ALL CRITICAL LOCATIONS.
3. CONTRACTOR SHALL REVIEW AND INDICATE HIS APPROVAL OF EACH SHOP DRAWING PRIOR TO SUBMITTAL FOR REVIEW. DO NOT START WORK OR FABRICATION UNTIL SHOP DRAWINGS HAVE BEEN REVIEWED BY THE ENGINEER AND RETURNED TO THE CONTRACTOR.
4. SUBMITTALS WILL BE REVIEWED ONLY FOR GENERAL COMPLIANCE WITH THE CONTRACT DOCUMENTS AND NOT FOR DIMENSIONS OR QUANTITIES. THE SUBMITTAL REVIEW SHALL NOT RELIEVE THE CONTRACTOR OF RESPONSIBILITY FOR PURCHASE OF ANY ITEM IN FULL COMPLIANCE WITH THE CONTRACT DOCUMENTS OR ITS COMPLETE AND PROPER INSTALLATION.
5. WHERE SUBMITTALS VARY FROM THE CONTRACT REQUIREMENTS, THE CONTRACTOR SHALL CLEARLY INDICATE ON SUBMITTAL OR ACCOMPANYING DOCUMENTS THE NATURE AND REASON FOR VARIATIONS.
6. EACH MANUFACTURER OR HIS REPRESENTATIVE MUST CHECK THE APPLICATION OF HIS EQUIPMENT AND CERTIFY AT TIME OF SHOP DRAWING SUBMITTAL THAT EQUIPMENT HAS BEEN PROPERLY APPLIED AND CAN BE INSTALLED, SERVICED AND MAINTAINED WHERE INDICATED ON DRAWINGS. ADVISE ENGINEER IN WRITING WITH SUBMITTAL DRAWINGS OF ANY POTENTIAL PROBLEMS. THE MANUFACTURER SHALL BE RESPONSIBLE FOR ANY CHANGES THAT MIGHT BE NECESSARY BECAUSE OF PHYSICAL CHARACTERISTICS OF EQUIPMENT THAT HAVE NOT BEEN CALLED TO THE ENGINEER'S ATTENTION AT THE TIME OF SUBMITTAL.

M. CUTTING, PATCHING, AND DRILLING:

1. ALL CUTTING AND PATCHING OF THE BUILDING CONSTRUCTION REQUIRED FOR THIS WORK SHALL BE BY THIS CONTRACTOR UNLESS SHOWN ON ARCHITECTURAL DRAWINGS AND CONFIRMED AS TO SIZE AND LOCATION PRIOR TO NEW CONSTRUCTION. CUTTING SHALL BE IN A NEAT AND WORKMANLIKE MANNER. NEATLY SAW CUT ALL RECTANGULAR OPENINGS, SET SLEEVE THROUGH OPENING, AND FINISH PATCH OR PROVIDE TRIM FLANGE AROUND OPENING. CORE DRILL AND SLEEVE ALL ROUND OPENINGS. DO NOT CUT ANY STRUCTURAL COMPONENTS WITHOUT ARCHITECT'S APPROVAL.
2. PATCH AND FINISH TO MATCH ADJACENT AREAS THAT HAVE BEEN CUT, DAMAGED OR MODIFIED AS A RESULT OF THE INSTALLATION OF THE MECHANICAL OR ELECTRICAL EQUIPMENT. FIRE STOP ALL PENETRATIONS OF FIRE RATED CONSTRUCTION IN A CODE APPROVED MANNER.
3. ALL CONTRACTORS SHALL CONFIRM WITH OWNER, PRIOR TO BID, TIMES AVAILABLE FOR NOISE PRODUCING WORK SUCH AS CUTTING AND CORE DRILLING OF FLOORS, WALLS, ETC., AS WELL AS TIMES FOR WORK WHICH REQUIRE ACCESS INTO ADJOINING TENANT SPACES. INCLUDE ANY PREMIUM TIME IN BID.
4. EXACT LOCATION OF ROOFTOP EQUIPMENT SHALL BE APPROVED BY OWNER'S STRUCTURAL ENGINEER.
5. INFORMATION REGARDING REQUIRED PIPE OPENINGS IN WALLS, FLOORS, CHASES, ETC., AND CONCRETE EQUIPMENT PADS OR FOUNDATIONS SHALL BE GIVEN TO THE GENERAL CONTRACTOR BY THIS CONTRACTOR PRIOR TO THE CONSTRUCTION PERIOD. IF THIS CONTRACTOR FAILS TO COMPLY WITH THIS REQUEST, OR IF INCORRECT INFORMATION IS GIVEN, THE NECESSARY CUTTING AND PATCHING WILL BE PERFORMED BY THE GENERAL CONTRACTOR, AT THIS CONTRACTOR'S EXPENSE.

N. FIRESTOPPING:

1. ALL SERVICES THAT PASS THRU FIRE OR SMOKE RATED PARTITIONS, WALLS, FLOORS, SHALL BE FIRESTOPPED. FIRE STOPPING RATING SHALL MATCH PARTITION RATING. ALL FIRE STOPPING SYSTEM SHALL MEET THE REQUIREMENTS OF ASTM E 814,UL 1479, AND BE FACTORY MUTUAL APPROVED.
2. ALL FIRESTOPPING AND/OR SMOKE STOPPING MATERIAL AND INSTALLATION SHALL BE AS MANUFACTURED BY HILTI OR APPROVED EQUAL.

O. ACCESS DOORS AND PANELS:

1. ACCESS DOORS SHALL BE PROVIDED IN WALLS AND CEILINGS WHERE REQUIRED TO PERMIT PROPER ACCESS TO VALVES AND ANY OTHER SUCH DEVICES WHICH REQUIRE MAINTENANCE OR SERVICE. DOORS PLACED IN WALLS, PARTITIONS OR OTHER FIRE-RATED CONSTRUCTION SHALL HAVE A LABEL SIGNIFYING THAT THE DOOR HAS THE SAME FIRE RATING AS THE FIRE-RATED CONSTRUCTION.
2. THIS CONTRACTOR SHALL FURNISH ACCESS PANELS TO THE GENERAL CONTRACTOR FOR INSTALLATION.
3. ACCESS PANELS SHALL BE CONSTRUCTED OF 14 GAUGE STEEL, WITH 16 GAUGE STEEL FRAMES. DOORS SHALL FINISH FLUSH WITH THE SURROUNDING SURFACE. FRAMES SHALL HAVE 3 INCH WIDE EXPANDED METAL FOR PLASTERED SURFACES AND PLAIN FLANGED TYPE FRAME FOR TILE, MASONRY OR GYPSUM BOARD SURFACES. DOORS AND FRAMES SHALL BE FURNISHED PRIME COATED. DOORS INSTALLED IN CERAMIC TILE OR OTHER NON-PAINTED SURFACES SHALL BE STAINLESS STEEL. HINGES SHALL BE CONCEALED SPRING TYPE, TO ALLOW DOORS TO BE OPENED 175 DEGREES. LOCKS SHALL BE FLUSH SCREWDRIVER TYPE WITH STEEL CAMS. ACCESS PANELS SHALL BE 16 INCHES BY 16 INCHES OR LARGER AS MAY BE REQUIRED FOR PROPER ACCESS TO THE DEVICE BEING SERVED.
4. ACCESS PANELS ARE NOT REQUIRED IN COMPLETELY ACCESSIBLE LIFT OUT TILE CEILINGS. CONTRACTOR SHALL REVIEW THE ROOM FINISH SCHEDULE ON THE ARCHITECTURAL DRAWINGS IN ORDER TO VERIFY THE NEED FOR ACCESS PANEL

P. PAINTING: IN FINISHED SPACES, PAINTING OF ALL MECHANICAL EQUIPMENT, APPARATUS, AND PIPING SHALL BE DONE BY THE PAINTING TRADE UNDER THE GENERAL CONTRACTOR SPECIFICATION, EXCEPT WHERE SPECIFIED TO BE DONE BY THE MECHANICAL CONTRACTOR.

Q. TEMPORARY HEAT:

1. THE COSTS OF TEMPORARY HEAT, INCLUDING UTILITY COSTS, SHALL BE AT THE EXPENSE OF THE HEATING TRADE (MECHANICAL CONTRACTOR). THE HEATING TRADE SHALL PROVIDE THE MEANS OF TEMPORARY HEAT. EXISTING HEATING EQUIPMENT AND SYSTEMS MAY NOT BE USED DURING CONSTRUCTION AS THE SYSTEMS SERVE OTHER OCCUPIED SPACES WITHIN THE BUILDING.
2. THE PERMANENT MECHANICAL SYSTEM SHALL NOT BE USED UNDER ANY EXCEPTIONS TO PROVIDE TEMPORARY HEATING, VENTILATING, EXHAUST OR AIR CONDITIONING UNTIL THE BUILDING IS CLEAN, WITHOUT ANY DUST OR DEBRIS THAT CAN ENTER THE MECHANICAL SYSTEM AND IS READY FOR OCCUPANCY. COVERING THE RETURN/EXHAUST AIR INLETS WITH FILTER MEDIA IS NOT AN ACCEPTABLE ALTERNATIVE TO HAVING AN ENCLOSED, DUST-FREE ENVIRONMENT FOR THE SYSTEMS TO OPERATE IN. IN NO EVENT SHALL THE MECHANICAL CONTRACTOR'S ONE YEAR WARRANTY BE SHORTENED BY THE USE OF PERMANENT EQUIPMENT FOR TEMPORARY HEAT.

R. RECORD DRAWINGS:

1. EACH CONTRACTOR OR SUBCONTRACTOR SHALL KEEP ONE (1) COMPLETE SET OF THE CONTRACT WORKING DRAWINGS ON THE JOB SITE ON WHICH HE SHALL REGULARLY RECORD ANY DEVIATIONS OR CHANGES FROM SUCH CONTRACT DRAWINGS MADE DURING CONSTRUCTION.
2. THESE DRAWINGS SHALL RECORD THE LOCATION OF ALL CONCEALED EQUIPMENT, PIPING, ELECTRIC SERVICE, SEWERS, WASTES, VENTS, DUCTS, CONDUIT AND OTHER PIPING, BY MEASURED DIMENSIONS TO EACH SUCH ITEM FROM READILY IDENTIFIABLE AND ACCESSIBLE WALLS OR CORNERS OF THE BUILDING. PLANS ALSO SHALL SHOW INVERT ELEVATION OF SEWERS AND TOP ELEVATION OF ALL OTHER BELOW-GRADE LINES.
3. RECORD DRAWINGS SHALL BE KEPT CLEAN AND UNDAMAGED AND SHALL NOT BE USED FOR ANY PURPOSE OTHER THAN RECORDING DEVIATIONS FROM WORKING DRAWINGS AND EXACT LOCATIONS OF CONCEALED WORK.
4. AFTER THE PROJECT IS COMPLETED, THESE SETS OF DRAWINGS SHALL BE DELIVERED TO THE ARCHITECT IN GOOD CONDITION, AS A PERMANENT RECORD OF THE INSTALLATION AS ACTUALLY CONSTRUCTED.

S. WARRANTY:

1. FULLY WARRANT ALL MATERIALS, EQUIPMENT AND WORKMANSHIP FOR ONE (1) YEAR FROM DATE OF ACCEPTANCE. EXTEND ALL MANUFACTURER'S WARRANTIES TO OWNER, INCLUDING ALL EXTENDED WARRANTIES ON HVAC EQUIPMENT.
2. REPAIR OR REPLACE WITHOUT CHARGE TO THE OWNER ALL ITEMS FOUND DEFECTIVE DURING THE WARRANTY PERIOD. IN THE CASE OF REPLACEMENT OR REPAIR DUE TO FAILURE WITHIN THE WARRANTY PERIOD, THE WARRANTY ON THAT PORTION OF THE WORK SHALL BE EXTENDED FOR A MINIMUM PERIOD OF ONE (1) YEAR FROM THE DATE OF SUCH REPLACEMENT OR REPAIR.

HYDRONIC PIPING (232113)

A. PIPE AND FITTINGS -- HYDRONIC PIPING 2" AND SMALLER SHALL BE:

1. TYPE "L" HARD COPPER TUBING ASTM B 88-832 WITH SWEATED JOINTS PER ASTM B 16.22 USING 95/5 OR ANTIMONY SOLDER OR "PRESS-FIT" MECHANICAL JOINTING. ALL FITTINGS SHALL BE MADE FROM WROUGHT COPPER.
2. SCHEDULE 40 STEEL PIPING WITH VICTAULIC PLAIN END QUICKVIC SD (R) FITTINGS. FITTINGS SHALL BE MADE FROM DUCTILE IRON. PROVIDE SCREWED UNIONS OR GROOVED FITTINGS AT FINAL CONNECTIONS TO EQUIPMENT TO ALLOW DISCONNECTION FOR REPAIR OR SERVICING.

B. PIPING 2 -1/2" AND LARGER SHALL BE SCHEDULE 40, WELDED BLACK STEEL (ASTM A53) WITH BLACK WROUGHT STEEL, BUTT WELDING TYPE (ASTM B16.9) FITTINGS, OR SCHEDULE 40 GROOVED BLACK STEEL (ASTM A53) WITH GROOVED FITTINGS MADE BY VICTAULIC, OR APPROVED EQUAL, MAY BE USED.

C. GROOVED JOINTS QUALITY ASSURANCE: GROOVED JOINTS SHALL BE VISUALLY VERIFIABLE TO ENSURE PROPER INSTALL PER MANUFACTURER'S INSTALLATION INSTRUCTIONS. IF WRITTEN MANUFACTURER'S INSTRUCTIONS REQUIRE A VERIFIED TORQUE RATHER THAN A VISUAL VERIFICATION, A TORQUE LOG OF EVERY COUPLING SHALL BE PROVIDED FOR APPROVAL TO THE ENGINEER AND OWNER TO VERIFY PROPER INSTALL.

D. BALL VALVES --- UP TO 2": BRONZE TWO PIECE BODY, STAINLESS STEEL BALL, TEFLON SEATS AND BLOW-OUT PROOF STUFFING BOX RING, LEVER HANDLE, AND BALANCING STOPS, UNION SOLDER ENDS. ACCEPTABLE MANUFACTURERS: APOLLO, LEGEND VALVE, VICTAULIC, OR WATTS.

E. BUTTERFLY VALVES -- BUTTERFLY VALVES SHALL BE BRAY MODEL 31 OR EQUAL WITH DUCTILE IRON LUG STYLE BODY, OR VICTAULIC WITH GROOVED CONNECTIONS, BRONZE DISC, 416 STAINLESS STEEL SHAFT, BRONZE BEARINGS, "EPDM" RUBBER SEAT, LEVER HANDLE OPERATORS AND SHALL BE RATED AT 175 POUNDS CWP. VALVES SHALL PROVIDE DEAD TIGHT SHUTOFF CAPABILITY IN EITHER DIRECTION UP TO 150 PSI WHEN THE DOWNSTREAM FLANGES ARE REMOVED.

F. VENT AND DRAIN VALVES -- ALL WATER PIPING SYSTEMS SHALL BE INSTALLED IN SUCH A MANNER THAT THEY CAN BE COMPLETELY VENTED AND DRAINED. UNLESS OTHERWISE NOTED, PROVIDE AT ALL HIGH POINTS WHERE AIR CAN COLLECT 1/4" BRASS COMPRESSION VENT COCKS, AND AT ALL LOW POINTS ½" BALL VALVES WITH HOSE BIB ENDS AND CAPS.

G. PRESSURE/TEMPERATURE PLUGS -- PROVIDE SISCO OR PETERSON 1/4_INCH NPT FITTING OF SOLID BRASS, FOR 1/8" O.D. PROBE. VALVE CORE SHALL BE NEOPRENE FOR TEMPERATURE TO 200 F, AND RATED FOR ZERO LEAKAGE FROM VACUUM TO 1,000 PSIG. PROVIDE TEST KIT CONSISTING OF TWO PRESSURE GAGES WITH PROBES AND 2 DIAL THERMOMETERS WITH CARRYING CASE.

H. STRAINERS -- Y-PATTERN, BODY: ASTM A 126, CLASS B CAST IRON, WITH BOLTED OR SCREWED COVER AND BOTTOM DRAIN CONNECTION. END CONNECTIONS: THREADED ENDS FOR STRAINERS NPS 2 AND SMALLER; FLANGED ENDS FOR STRAINERS NPS 2-1/2 AND LARGER. STRAINER SCREEN: STAINLESS-STEEL, 20-MESH STRAINER, OR PERFORATED STAINLESS-STEEL BASKET. WITH TAPPED BLOWOFF PLUG. RATING: 150-PSIG WORKING PRESSURE.

I. BALANCING VALVES -- PROVIDE VICTAULIC MULTI-TURN BALANCING VALVES WHERE SHOWN IN PIPING DETAILS ON THE DRAWINGS. VALVES SHALL BE OF BRONZE CONSTRUCTION (½" TO 2" SIZES) WITH EPDM SEATS/SEALS. VALVES SHALL HAVE DIFFERENTIAL PRESSURE READOUT PORTS, CONCEALED LOCKABLE MEMORY STOP, CALIBRATED NAMEPLATE AND DRAIN PORT. EACH VALVE SHALL HAVE POSITIVE SHUTOFF AND SHALL BE CONSTRUCTED FOR 300 PSIG RATED PRESSURE.

J. AUTOMATIC BALANCING VALVES -- PROVIDE VICTAULIC AUTOMATIC BALANCING VALVES, OR APPROVED EQUAL, WHERE SHOWN IN PIPING DETAILS ON DRAWINGS. VALVES SHALL HAVE BRASS BODIES AND CHANGEABLE FLOW CARTRIDGES.

K. PROVIDE VALVES AND UNIONS WHERE NEEDED TO PERMIT DISCONNECTIONS OF EACH PIECE OF EQUIPMENT FOR REPAIRS. MAKE CONNECTIONS TO EQUIPMENT WITH SHUT-OFF VALVES ON SUPPLY AND BALANCE VALVES ON RETURNS. INSTALL UNIONS IN PIPES 2" AND SMALLER, ADJACENT TO EACH VALVE, AT FINAL CONNECTIONS EACH PIECE OF EQUIPMENT, AND ELSEWHERE AS INDICATED. UNIONS ARE NOT REQUIRED ON FLANGED DEVICES.

L. CONNECTIONS BETWEEN DISSIMILAR PIPING MATERIALS SHALL BE MADE WITH SUITABLE DIELECTRIC INSULATING UNIONS. ISOLATE COPPER PIPING FROM DISSIMILAR METALS, SUCH AS METAL STUDS AND VENT PIPING.

M. CLOSED SYSTEM WATER TREATMENT -- FILL SYSTEM WITH WATER AND LOW FOAM DETERGENT TO REMOVE DIRT AND SCALE, CIRCULATE UNTIL SYSTEM IS CLEAN AND FLUSH UNTIL WATER IS CLEAR AND REFILL WITH CLEAN WATER . ADD CORROSION AND RUST INHIBITORS. CHECK PH AND ADD CHEMICALS TO ADJUST PH PER MANUFACTURER'S INSTRUCTIONS. PROVIDE CHEMICAL POT FEEDER AND PIPE ACROSS SYSTEM. PROVIDE CHEMICAL TO TREAT SYSTEM FOR ONE YEAR. RECHECK AFTER ONE YEAR AND ADD CHEMICAL AS NEEDED FOR PROPER CHEMICAL TREATMENT.

N. PROVIDE CONDENSATE DRAIN FOOR ALL COOLING COILS. ALL CONDENSATE DRAINS SHALL BE TRAPPED PER THE COOLING COIL TRAP DETAIL OR MANUFACTURERS RECOMMENDATIONS, WHICH EVER IS MORE STRINGENT/DEEPER. PROVIDE CLEANOUT.

O. CONDENSATE DRAIN PIPING IN RETURN AIR RATED PLENUMS SHALL BE TYPE L COPPER WITH 1/2" FIBERGLASS INSULATION (MIN. R-VALUE = 3). SCHEDULE 40 PVC WITHOUT INSULATION MAY BE USED IN ALL OTHER LOCATIONS.

P. WHERE DAMAGE TO ANY BUILDING COMPONENT COULD OCCUR AS A RESULT OF OVERFLOW OR STOPPAGE OF THE PRIMARY CONDENSATE DRAIN SYSTEM, PROVIDE UL 508 WATER-LEVEL DETECTION DEVICE IN THE PRIMARY DRAIN PAN, OVERFLOW OUTLET OR IN A SECONDARY DRAIN PAN PER IMC REQUIREMENTS. COOLING SYSTEM SHALL DISABLE UPON DETECTION OF WATER AND GENERATE A BAS ALARM (IF APPLICABLE).

STEAM PIPING (232213)

A. STEAM PIPING SHALL BE SCHEDULE 40 BLACK STEEL AND CONDENSATE PIPING SHALL BE SCHEDULE 80 BLACK STEEL. THREADED CAST IRON FITTINGS 2" AND SMALLER, WELDED FITTINGS FOR LARGER SIZES. MAKE REDUCTIONS IN PIPE SIZES USING ECCENTRIC REDUCER FITTING INSTALLED WITH THE FLAT SIDE DOWN.

B. GROOVED JOINT COUPLINGS FOR STEAM: RIGID TYPE, SUITABLE FOR SATURATED STEAM PIPING SYSTEMS ON SCHEDULE 40 OR 80 CARBON STEEL PIPE WITH OPERATING TEMPERATURES TO +388°F AND 200 PSI IN PIPE SIZES NPS 2 THROUGH NPS 8. VICTAULIC STYLE 870 RIGID COUPLING USED WITH PIPING GROOVED USING A VICTAULIC GROOVING TOOL EQUIPPED WITH N9S ROLL SETS IN ACCORDANCE WITH VICTAULIC SPEC OGS-200. FITTINGS SHALL BE GROOVED IN ACCORDANCE WITH VICTAULIC SPEC 0GS-200.

C. PITCH STEAM PIPING IN DIRECTION OF FLOW 1/4" PER 10', AND 1/2" PITCH PER 10' ON CONDENSATE RETURN PIPING. MAKE STEAM CONNECTIONS TO ALL EQUIPMENT WITH GATE VALVE AND UNION AND INSTALL STEAM TRAP, UNION, GATE VALVE, STRAINER AND CHECK VALVE ON CONDENSATE RETURNS FROM EQUIPMENT. ALL PIPING SHALL BE INSTALLED ON ROLLER HANGERS WITH HEAVY GAGE STEEL SHIELD BETWEEN HANGER ROLLER AND

Oak Park
VILLAGE OF OAK PARK
CONSTRUCTION DOCUMENT(S)
REVIEWED FOR COMPLIANCE
These document(s) has been reviewed for conformance with applicable provisions of the codes and ordinances of the Village of Oak Park. The permit process is a check and balance system that normally involves a licensed designer, plans examiner, contractor, and inspector to ensure the best quality and safest construction possible. As much as the mentioned professionals attempt to achieve full code compliance every effort has been made to identify all code deficiencies however; failure to identify a code deficiency during plan review and inspection does not alleviate any obligation to comply with all applicable code provisions. Ultimately the owner and contractor are responsible for full code compliance.
KEEP A PRINTED APPROVED COPY OF THE PLANS ON SITE AT ALL TIMES FOR CONTRACTORS AND INSPECTORS
- Signage is required to provide the address, contractor name and emergency contact information
- Before you dig call J.U.L.I.E @ 811
- Construction hours are 7:00AM through 6:00PM all seven days a week
- Address numbers shall be posted in the front and in the alley of the site (if applicable)
- Trees shall be protected in the parkways; do not block sidewalks or alleyways
- Portable toilets shall be properly maintained a minimum of 10' from the lot line
- Construction fencing shall secure the site and materials(6' high for res. & 8' high for comm. sites)
- Respect the neighboring properties; do not trespass on or damage neighboring properties
- Keep the site clean, safe, organized and free from debris.
- Maintain all guardrails, walkways, ladders and stairs in a safe condition

Any and all changes and/or deviations to the approved plans shall be proposed in writing, in triplicate, for a complete re-review and re-approval.

625 W Adams Street – 19th Floor
Chicago, IL 60661
312.320.3668

LICENSED PROFESSIONAL ENGINEER
ALEXANDER G. RADKOFF
062-073334
OF ILLINOIS

DESIGN FIRM LIC. NO: 184008703-002
DESIGN FIRM LIC. NO. EXP.: 04.30.2027
ILLINOIS LICENCE NUMBER: 062.073334
LIC. EXP.: 11.30. 2025

1144 Lake Street, LLC

BASE BUILDING MECHANICAL RENOVATIONS

1144 W LAKE ST
OAK PARK, IL 60301

NO.	DESCRIPTION	DATE
1 (revision triangle)	PERMIT REVISION 1	09/19/2025
1	ISSUED FOR PERMIT	08/25/2025

JOB NO.: 25.068

SCALE: AS SHOWN

TITLE: MECHANICAL SPECIFICATIONS

SHEET: M0.2

8/24/2025 4:52:45

INSULATION.

D. INSTALL BRANCH CONNECTIONS TO SUPPLY MAINS USING 45 DEGREE FITTINGS IN MAIN WITH TAKE-OFF OUT THE TOP OF THE MAIN. WHERE THE LENGTH OF A BRANCH TAKE-OFF IS LESS THAN 10', PITCH BRANCH LINE DOWN TOWARD MAINS, 1/2" PER 10'. INSTALL DRIP LEGS AT LOW POINTS AND NATURAL DRAINAGE POINTS IN THE SYSTEM AS REQUIRED.

E. PRESSURE TEST PIPING AND CLEAN ALL STRAINERS AFTER INITIAL SYSTEM START UP.

REFRIGERANT PIPING (232300)

A. INSTALL REFRIGERANT PIPING BETWEEN CONDENSING UNIT AND DX COIL. PIPING SHALL BE REFRIGERANT GRADE TYPE "L" OR ACR COPPER WITH BRAZED JOINTS. PIPE PER MANUFACTURER'S PIPING DIAGRAMS AND RECOMMENDATIONS.

B. ISOLATE PIPING FROM STRUCTURE WITH ONE (1) INCH INSULATION BETWEEN ALL PIPING AND SUPPORT POINTS.

C. AFTER COMPLETION, PRESSURE TEST PIPING, PURGE AND EVACUATE SYSTEM TWICE AND CHARGE SYSTEM WITH REFRIGERANT AND OIL.

D. INSTALL PIPING IN AS SHORT AND DIRECT ARRANGEMENT AS POSSIBLE TO MINIMIZE PRESSURE DROP. PROVIDE OIL TRAP AS RECOMMENDED BY THE EQUIPMENT MANUFACTURER.

E. INSTALL UNIONS TO ALLOW REMOVAL OF SOLENOID VALVES, PRESSURE REDUCING VALVES, EXPANSION VALVES, AND AT CONNECTIONS TO COMPRESSORS AND EVAPORATORS.

F. FILL THE PIPE AND FITTINGS DURING BRAZING, WITH NITROGEN TO PREVENT FORMATION OF SCALE.

PIPE WALL SEALS (230517)

A. WALL PIPE SEALS WITH RUBBER LINKS SHALL BE THUNDERLINE LINK SEAL, OR APPROVED EQUAL. WALL PIPE SEALS WITH INORGANIC MATERIAL LINKS THE PENETRATIONS OF FIRE RATED WALLS SHALL BE THUNDERLINE PYRO-PAC, OR APPROVED EQUAL.

B. SEALS SHALL BE MODULAR MECHANICAL TYPE CONSISTING OF INTERLOCKING SYNTHETIC RUBBER OR INORGANIC MATERIAL LINKS SHAPED TO CONTINUOUSLY FILL THE ANNULAR SPACE BETWEEN THE PIPE AND WALL OPENING. LINKS SHALL BE LOOSELY ASSEMBLED WITH BOLTS TO FORM A CONTINUOUS BELT AROUND THE PIPE. A PRESSURE PLATE SHALL BE PROVIDED UNDER THE BOLT HEAD AND NUT OF EACH LINK. SEALS SHALL BE CONSTRUCTED TO PROVIDE ELECTRICAL INSULATION BETWEEN THE PIPE AND SLEEVE, THUS REDUCING CHANCES OF CATHODIC REACTION BETWEEN THESE TWO MEMBERS.

C. AFTER THE SEAL ASSEMBLY IS POSITIONED IN THE SLEEVE, THE TIGHTENING OF THE BOLTS SHALL CAUSE THE SEALING ELEMENTS TO EXPAND AND PROVIDE AN ABSOLUTELY WATER-TIGHT SEAL BETWEEN THE PIPE AND SLEEVE.

D. SLEEVES SHALL BE MANUFACTURED FROM HEAVY-WALL, WELDED OR SEAMLESS STEEL PIPE. A FULL CIRCLE CONTINUOUSLY WELDED WATER STOP PLATE SHALL BE PROVIDED TO ASSURE POSITIVE WATER SEALING OF THE SLEEVE. SLEEVE SHALL BE PROTECTED BY A COATING OF ENRICHED RED PRIMER.

DUCTWORK (233113)

A. FABRICATE AND ERECT ALL DUCTWORK TO ASHRAE AND SMACNA STANDARDS FROM G90 GALVANIZED STEEL. COMPLY WITH NFPA BULLETIN 90A REQUIREMENTS.

B. SUPPLY DUCTWORK UPSTREAM OF TERMINAL UNITS AND WITHIN 15' OF ANY AHU FAN OUTLET SHALL HAVE A SMACNA 3" STATIC PRESSURE RATING WITH SEAL CLASS A SEAMS AND JOINTS.

C. GENERAL SUPPLY AND RETURN DUCTWORK HAVE A SMACNA 2" STATIC PRESSURE RATING WITH SEAL CLASS B SEAMS AND JOINTS.

D. OUTDOOR AIR INTAKE DUCTWORK SHALL HAVE A SMACNA 2" STATIC PRESSURE RATING WITH SEAL CLASS A SEAMS AND JOINTS.

E. ALL EXPOSED ROUND AND OVAL DUCTWORK IN SHALL HAVE SPIRAL LOCKSEAM CONSTRUCTION.

F. ALL RECTANGULAR TRANSFER DUCTWORK SHALL HAVE 1" THICK ACOUSTICAL LINER. LINER SHALL BE FLEXIBLE AND CONSTRUCTED OF GLASS FIBERS BONDED WITH A THERMOSETTING RESIN. THE SURFACE OF THE LINER SHALL HAVE AN ANTIMICROBIAL EROSION RESISTANCE COATING TESTED BY NRTL AND REGISTERED BY THE EPA FOR USE IN HVAC SYSTEMS. MINIMUM R-VALUE SHALL BE 6.0.

G. GENERAL EXHAUST DUCTWORK UNDER 45' IN LENGTH SHALL HAVE A SMACNA 1" STATIC PRESSURE RATING WITH SEAL CLASS B SEAM AND JOINTS. EXHAUST DUCTWORK OVER 45' IN LENGTH SHALL HAVE A SMACNA 2" STATIC PRESSURE RATING WITH SEAL CLASS A SEAM AND JOINTS.

H. ALL FLEXIBLE DUCTWORK SHALL BEAR THE UL 181 LABEL (CLASS 1 AIR DUCT) AND SHALL BE FACTORY INSULATED (1-1/2 ", 0.6 LB., FIBERGLASS) ATCO UPC #076 I OR EQUAL. FLEXIBLE DUCTWORK SHALL COMPLY W/ NFPA 90A, AND NFPA 90B. ALL FLEXIBLE DUCTWORK CONNECTED TO DIFFUSERS SHALL NOT BE LESS THAN THE NECK SIZE OF THE DIFFUSER. MINIMUM FLEXIBLE DUCT BEND RADIUS OF CURVATURE SHALL BE 3 DUCT DIAMETERS, MAXIMUM LENGTH SHALL BE 6'-0", NO MORE THAN THE EQUIVALENT OF TWO (2) 90 DEGREE BENDS WILL BE ACCEPTABLE. FLEXIBLE DUCTS SHALL BE INDEPENDENTLY SUPPORTED FROM THE STRUCTURE AND CONNECTED WITH PLASTIC DRAW BANDS TIGHTENED WITH MANUFACTURER'S TOOL. FLEXIBLE DUCTS ARE NOT PERMITTED IN ROOMS WITHOUT CEILINGS.

I. ALL FABRIC DUCTWORK SHALL BE COATED, 100% POLYESTER, WOVEN, FIRE RETARDANT MATERIAL, UL AND NFPA APPROVED, NON-POROUS AND MACHINE WASHABLE. DISPERSION ORIFICE SIZE, SPACING AND QUANTITY TO BE SELECTED BY THE MANUFACTURER FOR THE REQUIRED CFM AND DIFFUSER LENGTH OF EACH APPLICATION. COLOR TO BE SELECTED BY THE ARCHITECT. PROVIDE GALVANIZED SUSPENSION HARDWARE AND ACCESSORIES. SIMILAR TO DUCTSOX DURATEX HIGH THROW MODEL.

J. EXTERIOR DUCTWORK (ALL DUCTWORK EXPOSED TO AMBIENT CONDITIONS) SHALL BE 2" THICK RIGID PHENOLIC, MINIMUM R-10 INSULATION VALUE, NOT EXCEEDING 25 FLAME SPREAD AND 50 SMOKE DEVELOPED RATINGS, WITH FACTORY-APPLIED WEATHERPROOF JACKETING DESIGNED FOR EXTERIOR INSTALLATION. SUPPORT AND INSTALLATION SHALL BE PER MANUFACTURER'S RECOMMENDATIONS, UTILIZING SUPPORT SYSTEM THAT FULLY ENCLOSES THE DUCT. REINFORCE DUCT AS NECESSARY PER SMACNA HVAC PHENOLIC DUCT CONSTRUCTION STANDARDS. ACCEPTABLE MANUFACTURERS ARE AQC INDUSTRIES' Q-DUCT AND THERMADUCT. 1

K. INCLUDE ALL ACOUSTIC, DOUBLE RADIUS AIRFOIL SHAPED PERFORATED ALUMINUM TURNING VANES, MANUAL DAMPERS, FLEXIBLE CONNECTORS, GRILLES AND DIFFUSERS, ACOUSTIC LINING, AND OTHER SHEET METAL ACCESSORIES FOR THE PROJECT. VOLUME DAMPERS TO BE OF OPPOSED BLADE TYPE CONSTRUCTED IN ACCORDANCE WITH "SMACNA" STANDARDS.

L. ALL BRANCH CONNECTION FITTINGS IN RECTANGULAR DUCTWORK SHALL BE 45 DEGREE TRANSITION TYPE, CONICAL FITTINGS OR SPIN-IN FITTINGS. BUTT FITTINGS ARE NOT ACCEPTABLE.

M. PROVIDE FIRE DAMPERS WITH ACCESS DOORS AT ALL FIRE RATED WALLS, PARTITIONS AND CEILINGS. DAMPERS SHALL HAVE RATING EQUIVALENT TO BARRIER. DAMPER SHALL BE THE DYNAMIC TYPE AND SHALL BE ABLE TO CLOSE AGAINST AN AIRSTREAM. DAMPERS SHALL MEET ALL NFPA AND IBC REQUIREMENTS. THE INSTALLED FIRE DAMPERS SHALL COMPLY WITH THE REQUIREMENTS OUTLINED IN THE FIRE DAMPER AND HEAT STOP GUIDE FOR AIR HANDLING SYSTEMS (1992 EDITION). 1

N. PROVIDE SMOKE DAMPERS WITH ACCESS DOORS AT ALL SMOKE BARRIERS/PARTITIONS. UNIT SHALL INCORPORATE BLADE END SWITCHES (OPEN AND CLOSED), AND OUTSIDE THE DUCT MOUNTED UL LISTED MOTOR. PROVIDE MANUFACTURER'S STANDARD U.L. LISTED OPEN- CLOSE - RESET SWITCH AND POSITION PILOT LIGHTS IN UNIT MOUNTED ENCLOSURE. ENCLOSURE TO BE CAPABLE OF BEING REMOVED FOR REMOTE MOUNTING TO ENSURE VISIBILITY AFTER SYSTEM INSTALLATION.

O. PROVIDE COMBINATION FIRE/SMOKE DAMPERS AT ALL FIRE/SMOKE RATED SHAFT AND WALL LOCATIONS. EACH COMBINATION FIRE SMOKE DAMPER SHALL HAVE 16 GA. GALVANIZED BLADES STRENGTHENED WITH GROOVES MEETING REQUIREMENTS OF UL STANDARD 555 & 555S AND HAVE AN 1-1/2 HOUR RATING. BASIS OF DESIGN SHALL BE GREENHECK MODEL FSD 200 SERIES. DAMPERS SHALL BE EQUIPPED STANDARD WITH AN ELECTRIC HEAT-RESPONSIVE DEVICE THAT PERFORMS THE SAME FUNCTION AS A FUSIBLE LINK TO CLOSE DAMPER AT 350 °F. PROVIDE POSITION INDICATING SWITCHES TO MEET REQUIREMENTS OF SMOKE PURGE CONTROL AND/OR BUILDING MANAGEMENT SYSTEM CONTROLS. THE DAMPER OPERATION AND CONSTRUCTION SHALL MEET UL REQUIREMENTS.

P. PROVIDE CURBS FOR ALL ROOF OPENINGS FOR DUCTS, FLUES, PIPING AND EQUIPMENT. CURBS SHALL BE FURNISHED AS ACCESSORIES TO THE EQUIPMENT OR 8" HIGH PATE OR EQUAL EQUIPMENT SUPPORTS SPANNING STRUCTURE AND FLASHED INTO ROOFING. ALL CUTTING, FLASHING, AND PATCHING OF ROOF SHALL BE BY OWNER'S ROOFING CONTRACTOR AND PAID FOR BY MECHANICAL CONTRACTOR.

Q. PROVIDE BIG FOOT H FRAME SETS SUPPORT SYSTEM OR SIMILAR FOR ALL ROOFTOP DUCTWORK. SPACING SHALL BE PER SMACNA GUIDELINES.

DUCTWORK EXTERNAL INSULATION & PIPE INSULATION (230713, 230719)

A. INSULATE DUCTWORK AS DESCRIBED IN DUCTWORK INSULATION SCHEDULE. FIBERGLASS DUCT WRAP SHALL BE FULLY SECURED TO DUCT. LAP AND TAPE SEAMS AND SECURE TIGHTLY TO THE DUCTS WITH WIRE OR STICK PINS.

B. DO NOT INSULATE:

1. TRANSFER AIR DUCTWORK (ACOUSTICALLY LINE DUCT, CLEAR INSIDE DIMENSIONS SHOWN ON PLANS) 1

C. INTERNAL DUCT INSULATION – DUCTWORK INDICATED TO HAVE INTERNAL INSULATION SHALL BE INTERNALLY COVERED WITH INSULATION SUITABLE TO MEET R-VALUES LISTED IN INSULATION SCHEDULE. INSULATION SHALL BE MANUFACTURED FROM A ROTARY PROCESS WITH A NON-WOVEN HYDROPHOBIC FACING. INSULATION SHALL HAVE FLAME/SMOKE RATING OF 25/50. INSULATION SHALL WITHSTAND DUCT VELOCITIES OF 4000 FPM MINIMUM. DUCT SIZES SHOWN ON DRAWINGS ARE CLEAR INTERNAL DIMENSIONS. WHERE LINER IS USED, INCREASE OUTSIDE DIMENSIONS OF DUCT TO MAINTAIN INTERNAL DIMENSIONS. INSTALL LINER PER SMACNA OR NAIMA STANDARDS.

D. HYDRONIC PIPING TO BE INSULATED AS DESCRIBED IN PIPING INSULATION SCHEDULE. PROVIDE SECTIONAL GLASS FIBER PIPE INSULATION HAVING FACTORY APPLIED WHITE "ALL SERVICE" JACKET. LONGITUDINAL FLAPS SHALL BE SELF-SEALING TYPE ADDITIONALLY SECURED WITH NONFERROUS FLARE DOOR STAPLES SPACED 6" ON CENTERS. END JOINTS SHALL BE CLOSED WITH 4" WIDE SELF-SEALING TAPE STAPLED IN PLACE. ALL FITTINGS TO BE FINISHED WITH PRE-MOLDED ONE-PIECE ZESTON TYPE PVC COVERS WITH FIBERGLASS INSULATION INSIDE. SEAL ALL VISIBLE RAW FIBERGLASS WITH BENJAMIN FOSTER #3036 WHITE MASTIC.

E. INSULATE REFRIGERANT PIPING LINES AS DESCRIBED IN PIPING INSULATION SCHEDULE WITH ELASTOMERIC FOAM INSULATION WITH SELF-SEALING SEAM. ARMACELL - AP ARMAFLEX SS INSULATION. PAINT CLOSED CELL INSULATION OUTDOORS WITH TWO COATS OF UV RESISTANT PAINT PER MANUFACTURER'S RECOMMENDATIONS. USE PRE-MOLDED COVERS OVER FITTINGS, VALVES, ELBOWS AND CONTROL DEVICES SEALED VAPOR TIGHT.

F. STEAM SYSTEMS PIPING SHALL BE INSULATED AS DESCRIBED IN PIPING INSULATION SCHEDULE.

G. INSULATION SHALL BE OMITTED FROM HOT SYSTEM VALVE BODIES STRAINERS AND UNIONS. SYSTEMS OPERATING BELOW AMBIENT TEMPERATURE SHALL HAVE ALL VALVE BODIES AND PIPING SPECIALTIES FULLY INSULATED. ALL VALVE BODIES, STRAINERS, UNIONS, PUMP CASING, WATER SEPARATORS, ETC. IN COLD PIPING SHALL BE COVERED SAME AS PIPING SYSTEM. PIPE HANGERS ON INSULATED PIPE SHALL BE OUTSIDE OF THE INSULATION, SIZED ACCORDINGLY AND WITH SADDLE INSERT SUFFICIENT TO PROTECT INSULATION FROM CRUSHING.

H. ALL INSULATION TO BE APPLIED IN FULL ACCORDANCE WITH THE MANUFACTURER'S RECOMMENDATIONS. ALL INSULATION SHALL COMPLY WITH 25/50 FLAME AND SMOKE HAZARD RATINGS PER ASTM E-84, NFPA 255 AND UL 723.

I. PROVIDE REMOVABLE INSULATION SECTIONS TO COVER PARTS OF EQUIPMENT WHICH MUST BE OPENED PERIODICALLY FOR MAINTENANCE; INCLUDE METAL VESSEL COVERS, FASTENERS, FLANGES, CHILLED WATER PUMPS, FRAMES AND ACCESSORIES.

J. REPLACE DAMAGED INSULATION WHICH CANNOT BE REPAIRED SATISFACTORILY, INCLUDING UNITS WITH VAPOR BARRIER DAMAGE AND MOISTURE SATURATED UNITS.

K. CONDENSATE DRAIN PIPING IN RETURN AIR RATED PLENUMS SHALL BE TYPE L COPPER WITH 1/2" FIBERGLASS INSULATION (MIN. R-VALUE = 3). SCHEDULE 40 PVC WITHOUT INSULATION MAY BE USED IN ALL OTHER LOCATIONS.

HANGERS AND SUPPORTS (230529)

A. SUPPORT ALL PIPING FROM STRUCTURE WITH UL LISTED HANGERS AND SUPPORTS SUITABLE FOR THE INTENDED INSTALLATION. DESIGN, SELECTION, SPACING, AND APPLICATION OF HANGERS AND SUPPORTS SHALL COMPLY WITH ANSI B31.1 AND MSS SP-69. HANGERS SHALL BE MANUFACTURED BY PENTAIR., OR APPROVED EQUAL. BLACK OR GALVANIZED STEEL PIPE = MODEL NO. 100, CAST IRON PIPE = MODEL NO. 400, COPPER TUBING = MODEL NO. 102-A.

B. CONTRACTOR SHALL PROVIDE INSULATION HANGER WITH PROTECTIVE SHIELDS, SUCH AS PENTAIR, MODEL NO. 125, OR APPROVED EQUAL FOR ALL INSULATED PIPING.

C. CONTRACTOR SHALL PROVIDE RISER CLAMPS FOR VERTICAL PIPING AT EACH LEVEL. RISER CLAPS SHALL BE PENTAIR MODEL NO. 510 FOR STEEL PIPING AND MODEL NO. 511 FOR COPPER TUBING OR APPROVED EQUAL. USE "SHORT-END" RISER CLAMPS WHERE SPACE IS LIMITED.

D. CONTRACTOR SHALL PROVIDE SIDE BEAM CLAMPS FOR SUPPORTING PIPING FROM STRUCTURAL STEEL MEMBERS. BEAM CLAMPS SHALL BE MANUFACTURED BY PENTAIR, MODEL 300 OR APPROVED EQUAL.

E. WHERE OTHER MEANS OF SUPPORT PIPING ARE REQUIRED OR DESIRED, THE CONTRACTOR SHALL BE RESPONSIBLE FOR OBTAINING THE ENGINEER'S APPROVAL PRIOR TO INSTALLING THOSE SUPPORTS.

F. HANGERS AND SUPPORTS SHALL BE SPACED AT INTERVALS WHICH WILL PREVENT SAGGING AND REDUCE STRAIN ON VALVES AND SPECIALTIES. HANGER SPACING SHALL BE NO GREATER AND ROD SIZE SHALL BE NO SMALLER THAN THAT SHOWN IN THE FOLLOWING TABLE. HANGERS SHALL ALLOW FOR EXPANSION AND CONTRACTION. HANGER SHALL BE PROVIDED AT EACH CHANGE OF DIRECTION.

G. RISER CLAMPS SHALL BE INSTALLED ABOVE THE FLOOR AT EACH LEVEL. RISER CLAMPS MAY BE SUSPENDED BELOW FLOOR LEVEL, WITH HANGER RODS AND INSERTS, WHERE THE INSTALLATION OF ESCUTCHEON PLATES IS REQUIRED.

EQUIPMENT (235000)

A. MAKE ALL FINAL EQUIPMENT CONNECTIONS AND PROVIDE THE NECESSARY ADAPTORS, FITTINGS, VALVES, DEVICES, ETC. FOR A COMPLETE AND OPERABLE SYSTEM. PROVIDE COMPLETE WITH BASES, ISOLATORS, SUPPORTS AND OTHER REQUIRED ACCESSORIES.

B. EQUIPMENT SHALL BE INSTALLED IN FULL ACCORDANCE WITH THE MANUFACTURER'S DATA AND INSTALLATION INSTRUCTIONS, INCLUDING CLEARANCES; LUBRICATE AND ADJUST AS REQUIRED. IT IS THIS CONTRACTOR'S RESPONSIBILITY TO CHECK AND CONFORM TO THESE REQUIREMENTS PRIOR TO STARTING WORK. FURNISH AND INSTALL CLEAN SET OF FILTERS PRIOR TO BALANCING.

C. THE CONTRACTOR SHALL COORDINATE ELECTRICAL CHARACTERISTICS OF ALL MECHANICAL EQUIPMENT PRIOR TO ORDERING OF EQUIPMENT. COORDINATE REQUIREMENT FOR PROVISION OF MOTOR STARTERS, DISCONNECTS, CONTACTORS, CONTROL WIRING, ETC. AS REQUIRED FOR PROPER FUNCTIONING SYSTEM WITH ELECTRICAL CONTRACTOR. NO ADDITIONAL PAYMENT WILL BE MADE FOR LACK OF CONTRACTOR COORDINATION OF ELECTRICAL CHARACTERISTICS.

D. ALL FLOOR MOUNTED EQUIPMENT SHALL BE INSTALLED ON CONCRETE HOUSEKEEPING PADS. MINIMUM PAD THICKNESS SHALL BE NOMINAL 4". PAD SHALL EXTEND BEYOND THE EQUIPMENT A MINIMUM OF 4" ON EACH SIDE. CONCRETE PADS SHALL BE PROVIDED BY THIS CONTRACTOR. IT SHALL BE THE RESPONSIBILITY OF THE THIS CONTRACTOR TO COORDINATE THE SIZE AND LOCATION OF THE CONCRETE HOUSEKEEPING PADS WITH THE GENERAL CONTRACTOR.

E. ALL EQUIPMENT SHALL BE MOUNTED ON VIBRATION ISOLATORS TO PREVENT THE TRANSMISSION OF VIBRATION AND MECHANICALLY TRANSMITTED SOUND TO THE BUILDING STRUCTURE.

F. ISOLATION EQUIPMENT SHALL BE THE PRODUCT OF A SINGLE MANUFACTURER, AND SHALL BE DESIGNED SPECIFICALLY FOR THE APPLICATION REQUIRED. THIS INCLUDES, BUT IS NOT LIMITED TO, PIPING DUCTWORK, PUMPS, COMPRESSORS. VIBRATION ISOLATORS SHALL BE RATED FOR THE WEIGHT AND SPACING REQUIRED FOR THE EQUIPMENT REQUIRING ISOLATION.

G. PROVIDE CURBS FOR ALL ROOF OPENINGS FOR DUCTS, FLUES, PIPING AND EQUIPMENT. CURBS SHALL BE FURNISHED AS ACCESSORIES TO THE EQUIPMENT OR 8" HIGH PATE OR EQUAL EQUIPMENT SUPPORTS SPANNING STRUCTURE AND FLASHED INTO ROOFING. ALL CUTTING, FLASHING, AND PATCHING OF ROOF SHALL BE BY OWNER'S ROOFING CONTRACTOR AND PAID FOR BY MECHANICAL CONTRACTOR.

CONTROLS (230910)

A. PROVIDE COMPLETE TEMPERATURE CONTROLS FOR ALL HVAC SYSTEMS. PROVIDE NEW CONTROL DEVICES INCLUDING DAMPER OPERATORS, TEMPERATURE SENSORS, STAGING RELAYS AND OTHER REQUIRED DEVICES TO PROVIDE A COMPLETE OPERATIONAL SYSTEM PER THE FOLLOWING OPERATING SEQUENCE. MOUNT ALL CONTROLS FURNISHED AS ACCESSORIES TO EQUIPMENT AND PROVIDE ALL CONTROL WIRING REQUIRED FOR PROPER OPERATION WHERE NOT SPECIFICALLY SHOWN ON ELECTRICAL PLANS. ALL WIRING SHALL BE IN CONDUIT OR PER N.E.C. AND LOCAL CODE REQUIREMENTS. STANDARD MOUNTING HEIGHT TO TOP OF THERMOSTAT IS 48" ABOVE FINISHED FLOOR OR AS INDICATED ON THE ARCHITECTURAL DRAWINGS. DO NOT INSTALL THERMOSTATS NEAR DIMMER SWITCHES. WIRING OF ALL MOTORIZED OPERATORS AND THERMOSTATS (REGARDLESS OF VOLTAGE) ARE THE RESPONSIBILITY OF THE MECHANICAL CONTRACTOR.

B. THE CONTRACTOR SHALL FURNISH AND INSTALL A COMPLETE, WEB-BASED, NATIVE BACNET-INTEGRATED BUILDING AUTOMATION SYSTEM (BAS) INCLUDING ALL NECESSARY HARDWARE, ALL OPERATING AND APPLICATIONS SOFTWARE NECESSARY TO PERFORM THE HVAC CONTROL SEQUENCES OF OPERATION AS CALLED FOR IN THIS SPECIFICATION OR AS SHOWN ON THE DRAWINGS. BAS CONTRACTOR SHALL FURNISH AND INSTALL ALL RELATED SOFTWARE AND HVAC-DDC CONTROLS AS SPECIFIED WITHIN THIS SPECIFICATION. IT SHALL BE THE RESPONSIBILITY OF THE BAS CONTRACTOR TO COORDINATE THIS WORK WITH THE GENERAL CONTRACTOR, MECHANICAL CONTRACTOR, AND THE ELECTRICAL CONTRACTOR AS IT RELATES TO THE INSTALLATION AND WIRING OF ALL RELATED HVAC SYSTEMS.

C. IT SHALL BE THE RESPONSIBILITY OF THE BAS CONTRACTOR TO PROVIDE ALL THE REQUIRED LABOR AND PROGRAMMING TO SEAMLESSLY INTEGRATE THE NEW BAS BACNET SYSTEM AND ITS DDC POINTS, GRAPHICS, ALARMS, ETC. INTO AN EXISTING BAS IF PRESENT.

D. THE CONTROLS CONTRACTOR SHALL WARRANT THE SYSTEM FOR 24 MONTHS AFTER SUBSTANTIAL COMPLETION. DURING THE WARRANTY PERIOD, THE BUILDING SYSTEM CONTRACTOR SHALL BE RESPONSIBLE FOR ALL NECESSARY REVISIONS TO THE SOFTWARE AS REQUIRED TO PROVIDE A COMPLETE AND WORKABLE SYSTEM CONSISTENT WITH THE LETTER AND INTENT OF THE SEQUENCE OF OPERATION SECTION OF THE SPECIFICATION.

E. THE FOLLOWING ARE THE APPROVED BAS MANUFACTURERS:

1. AUTOMATED LOGIC, INC.
2. CARRIER CONTROLS
3. DELTA CONTROLS BY BUILDING CONTROL INTEGRATORS
4. DISTECH CONTROLS BY TRINITY AUTOMATED SOLUTIONS
5. HONEYWELL CONTROLS BY CHESAPEAKE CONTROLS, INC
6. JOHNSON CONTROLS, PITTSBURGH BRANCH OFFICE
7. KMC CONTROLS BY BUILDING CONTROL SYSTEMS
8. SIEMENS CONTROLS
9. TRANE CONTROLS
10. OR PRE-APPROVED EQUAL.

F. THE CONTROL SYSTEM SHALL BE PROGRAMMED WITH THE FOLLOWING SEQUENCES AND FEATURES:

1. UNOCCUPIED HEAT: THE SYSTEM SHALL USE THE BASEBOARD HEAT AS THE PRIMARY SOURCE OF HEAT DURING UNOCCUPIED PERIODS. IF THE BASEBOARD IS NOT ABLE TO MAINTAIN TEMPERATURE, THEN THE VAV FAN WITH THE HEAT VALVE 100% OPEN SHALL CYCLE TO PROVIDE ADDITIONAL HEAT IN THE SPACES.
2. MORNING WARM UP: BEFORE THE OCCUPIED PERIOD BEGINS, THE SYSTEM SHALL USE THE BASEBOARD HEAT TO BRING THE CONNECTED SPACES UP TO OCCUPIED TEMPERATURE. IF THE BASEBOARD CANNOT BRING THE SPACE UP TO SETPOINT WITHIN AN HOUR, THEN UTILIZE THE VAV BOXES TO ASSIST. THE VAV BOXES SHALL USE THEIR FANS AND HW COILS WITH THE PRIMARY AIR DAMPER CLOSED TO ADD HEAT NEEDED IN THE SPACES.
3. SUPPLY FAN PRESSURE RESET: THE CONTROL SYSTEM SHALL MONITOR ALL DAMPER POSITIONS THAT ARE CONNECTED TO THE AHU SUPPLY FAN. THE SUPPLY AIR PRESSURE SETPOINT SHALL BE REDUCED IF NONE OF THE DAMPERS ARE OPEN 95% OR GREATER.
4. SUPPLY TEMPERATURE RESET: THE CONTROL SYSTEM SHALL MONITOR ALL DAMPER POSITIONS THAT ARE CONNECTED TO A PARTICULAR UNIT'S SUPPLY FAN. THE SUPPLY AIR TEMPERATURE SHALL BE RESET HIGHER IF THE RETURN AIR RELATIVE HUMIDITY IS BELOW 40% AND NONE OF THE VAV DAMPER POSITIONS ARE OPEN 95% OR GREATER.
5. ECONOMIZER: THE CONTROL SYSTEM SHALL MONITOR THE ECONOMIZER OPERATION AND THE RELEVANT SENSORS FORTHE AHU. THE AHU SHALL CONTROL THE DAMPER POSITION AS DESIGNED FROM THE FACTORY. THE CONTROL SYSTEM SHALL MONITOR THE DAMPER POSITION AND THE OTHER SENSORS THAT ARE INTEGRATED INTO ECONOMIZER OPERATION.

IDENTIFICATION (230593)

A. CONTRACTOR SHALL PROVIDE IDENTIFICATION LABELS, TAGS, ETC. AS INDICATED ON THE DRAWINGS AND AS SPECIFIED HEREIN.THE IDENTIFICATION SHALL BE IN ACCORDANCE WITH ANSI STANDARD A13.1. PRESSURE SENSITIVE MARKERS SHALL BE MANUFACTURED BY THE BRADY CO., OR APPROVED EQUAL. MARKERS SHALL BE MANUFACTURER'S STANDARD PRODUCT. PRESSURE SENSITIVE PIPE MARKERS SHALL BE MANUFACTURED BY THE BRADY CO., OR APPROVED EQUAL. PIPE MARKERS SHALL BE MANUFACTURER'S STANDARD PRODUCT.

MOTOR CONTROLLERS (230513)

A. UNLESS OTHERWISE INDICATED, EVERY MOTOR NOT SPECIFIED TO BE PROVIDED WITH A CONTROLLER AT THE FACTORY SHALL BE PROVIDED WITH A CONTROLLER AS SPECIFIED HEREIN. CONTROLLERS SHALL BE FURNISHED BY THIS CONTRACTOR. INSTALLATION OF ALL CONTROLLERS SHALL BE BY THE ELECTRICAL CONTRACTOR.

B. MOTOR CONTROLLERS SHALL CONFORM TO THE APPLICABLE REQUIREMENTS OF NEMA STANDARD IC-1, INDUSTRIAL CONTROL AND BE HEAVY DUTY CONSTRUCTION. CONTROLLER SIZES SHALL BE VERIFIED TO BE COMPATIBLE WITH HORSEPOWER OF THE MOTOR. CONTROLLERS SHALL BE MANUFACTURED BY ALLEN-BRADLEY CO., GENERAL ELECTRIC, CUTLER-HAMMER OR APPROVED EQUAL.

C. MANUAL MOTOR STARTERS:

1. SWITCHES SHALL BE TUMBLER-SWITCH STYLE. THE MANUAL MOTOR STARTERS SHALL PROVIDE OVERLOAD PROTECTION WHICH CLOSELY FOLLOWS THE MOTOR LOAD. MANUAL MOTOR STARTERS FOR OUTDOOR USE SHALL BE NEMA TYPE 4X, INDOOR USE SHALL BE NEMA TYPE 1, EXPLOSION PROOF USE SHALL BE NEMA TYPE 7.

D. MAGNETIC MOTOR CONTROLLERS:

1. MAGNETIC MOTOR CONTROLLERS SHALL BE PROVIDED AS INDICATED. THEY SHALL NOT BE SMALLER THAN NEMA SIZE 1.
2. NON-REVERSING MAGNETIC CONTROLLER SHALL BE UTILIZED TO START FULL VOLTAGE, NON-REVERSING, AC SINGLE SPEED MOTORS. THE CONTROLLERS SHALL BE SIZED FOR THE LOAD UNLESS OTHERWISE INDICATED.
3. REVERSING MAGNETIC CONTROLLER SHALL BE UTILIZED TO START FULL VOLTAGE REVERSING, AC SINGLE SPEED MOTORS. THE CONTROLLER SHALL BE SIZED FOR THE LOAD UNLESS OTHERWISE INDICATED. LOCATION OF REVERSING MAGNETIC CONTROLLERS IS INDICATED ON THE DRAWINGS.
4. WHERE MULTI-SPEED MOTORS ARE SCHEDULED ON THE DRAWINGS, THE MOTOR CONTROLS SHALL BE COMPATIBLE WITH THE TYPE MOTOR SHOWN.
5. OVERLOAD RELAYS SHALL BE SOLID STATE AND BE SUPPLIED IN EACH LEG. OVERLOAD RELAYS SHALL BE MATCHED TO LOAD AND SHALL BE ADJUSTABLE FROM 90% TO 110%. A SINGLE RESET BUTTON SHALL BE MOUNTED ON THE STARTER DOOR TO PERMIT EXTERNAL RESET. RELAYS SHALL BE CONVERTIBLE FROM MANUAL TO AUTOMATIC RESET BY A SIMPLE ADJUSTMENT.
6. CONTROL TRANSFORMERS SHALL BE PROVIDED, WHERE REQUIRED. BOTH LEGS OF THE PRIMARY AND ONE LEG OF THE SECONDARY OF THE CONTROL TRANSFORMER SHALL BE PROTECTED BY NEMA CLASS J FUSES. THE OTHER LEG OF THE SECONDARY SHALL BE GROUNDED. CONTROL TRANSFORMER CAPACITY SHALL BE ADEQUATE TO OPERATE ALL CONTROL DEVICES IN THE CIRCUIT. CONTROL VOLTAGE SHALL BE 120V AC UNLESS OTHERWISE SPECIFIED.
7. UNLESS OTHERWISE INDICATED, ALL MOTOR STARTERS SHALL BE PROVIDED WITH HAND-OFF-AUTOMATIC (H.O.A.) SWITCH IN THE DOOR. ENCLOSURES FOR MAGNETIC STARTERS SHALL BE NEMA TYPE 1 FOR INDOOR USE NEMA TYPE 4X FOR OUTDOOR USE AND NEMA TYPE 7 FOR EXPLOSION PROOF USE.
8. MOTOR CONTROLLERS SHALL BE PROVIDED WITH ALL CONTROL DEVICES, INCLUDING AUXILIARY CONTACTS, REQUIRED FOR EQUIPMENT TO OPERATE AS SPECIFIED.

E. COMBINATION MOTOR CONTROLLERS:

1. COMBINATION MOTOR CONTROLLERS SHALL BE PROVIDED WITH MOLDED CASE MOTOR CIRCUIT PROTECTORS OR MOLDED CASE CIRCUIT BREAKERS AS INDICATED. MOTOR CIRCUIT PROTECTIVE DEVICES SHALL HAVE SHORT CIRCUIT CAPACITY AS REQUIRED. UNIT CONTROL CIRCUIT FUSING SHALL BE PROVIDED. THE MOTOR CIRCUIT PROTECTIVE DEVICE SHALL BE MOUNTED IN THE SAME ENCLOSURE AS THE MAGNETIC CONTROLLER AND SHALL BE OPERABLE BY HAND FROM OUTSIDE THE ENCLOSURE. THE HANDLE SHALL BE SO INTERLOCKED WITH THE DOOR THAT IT MUST BE RETURNED TO THE "OFF" POSITION BEFORE THE DOOR CAN BE OPENED, BUT A COIN-PROOF DEFEAT MECHANISM SHALL BE PROVIDED TO ALLOW AUTHORIZED PERSONNEL TO OPEN THE ENCLOSURE DOOR WITHOUT OPENING THE DISCONNECTING DEVICE. PROVISIONS FOR PADLOCKING THE DISCONNECT HANDLE IN THE "OFF" POSITION SHALL BE MADE. THE ENCLOSURE FOR COMBINATION STARTERS SHALL BE NEMA TYPE 1 FOR INDOOR USE AND NEMA TYPE 4X FOR OUTDOOR

Oak Park
VILLAGE OF OAK PARK
CONSTRUCTION DOCUMENT(S)
REVIEWED FOR COMPLIANCE
These document(s) has been reviewed for conformance with applicable provisions of the codes and ordinances of the Village of Oak Park. The permit process is a check and balance system that normally involves a licensed designer, plans examiner, contractor, and inspector to ensure the best quality and safest construction possible. As much as the mentioned professionals attempt to achieve full code compliance every effort has been made to identify all code deficiencies however; failure to identify a code deficiency during plan review and inspection does not alleviate any obligation to comply with all applicable code provisions. Ultimately the owner and contractor are responsible for full code compliance.
KEEP A PRINTED APPROVED COPY OF THE PLANS ON SITE AT ALL TIMES FOR CONTRACTORS AND INSPECTORS
- Signage is required to provide the address, contractor name and emergency contact information
- Before you dig call J.U.L.I.E @ 811
- Construction hours are 7:00AM through 6:00PM all seven days a week
- Address numbers shall be posted in the front and in the alley of the site (if applicable)
- Trees shall be protected in the parkways; do not block sidewalks or alleyways
- Portable toilets shall be properly maintained a minimum of 10' from the lot line
- Construction fencing shall secure the site and materials(6' high for res. & 8' high for comm. sites)
- Respect the neighboring properties; do not trespass on or damage neighboring properties
- Keep the site clean, safe, organized and free from debris.
- Maintain all guardrails, walkways, ladders and stairs in a safe condition

Any and all changes and/or deviations to the approved plans shall be proposed in writing, in triplicate, for a complete re-review and re-approval.

625 W Adams Street – 19th Floor
Chicago, IL 60661
312.320.3668

LICENSED PROFESSIONAL ENGINEER
ALEXANDER G. RADKOFF
062-073334
OF ILLINOIS

DESIGN FIRM LIC. NO: 184008703-002
DESIGN FIRM LIC. NO. EXP.: 04.30.2027
ILLINOIS LICENCE NUMBER: 062.073334
LIC. EXP.: 11.30. 2025

1144 Lake Street, LLC

BASE BUILDING MECHANICAL RENOVATIONS

1144 W LAKE ST
OAK PARK, IL 60301

NO.	DESCRIPTION	DATE
1	PERMIT REVISION 1	09/19/2025
1	ISSUED FOR PERMIT	08/25/2025

JOB NO.: 25.068

SCALE: AS SHOWN

TITLE: MECHANICAL SPECIFICATIONS

SHEET: M0.3

8/24/2025 4:52:45

USE, AND NEMA TYPE 7 FOR EXPLOSION PROOF USE.

2. MOTOR CIRCUIT PROTECTORS SHALL BE THE CONTINUOUSLY ADJUSTABLE, INSTANTANEOUS MAGNETIC TRIP TYPE CIRCUIT BREAKER AND SHALL BE SO CONSTRUCTED THAT ALL POLES OPEN, CLOSE AND TRIP SIMULTANEOUSLY.

F. OVERLOAD AND SHORT CIRCUIT PROTECTION:

1. HEATER ELEMENTS SHALL BE PROVIDED FOR OVERLOAD PROTECTION. MOTOR CIRCUIT PROTECTOR SHALL BE PROVIDED FOR MOTOR SHORT CIRCUIT PROTECTION.

DISCONNECT SWITCHES (230514)

A. THIS CONTRACTOR SHALL FURNISH ALL SAFETY DISCONNECT SWITCHES (FUSED AND NON-FUSED) REQUIRED FOR EQUIPMENT FURNISHED UNDER THIS CONTRACT. IN ADDITION, THIS CONTRACTOR SHALL FURNISH A SAFETY DISCONNECT SWITCH FOR ALL MOTORS AND EQUIPMENT WHICH DO NOT HAVE COMBINATION STARTERS OR INTEGRAL DISCONNECTING MEANS. FUSIBLE DISCONNECT SWITCHES SHALL BE PROVIDED FOR ALL EQUIPMENT RATED FOR USE ONLY WITH FUSES (SUCH AS CONDENSING UNITS, COMPRESSORS, ETC.). SUCH SWITCHES SHALL BE ONE, TWO OR THREE POLE TYPE, WITH SOLID NEUTRAL FOR 4 WIRE SERVICE, AND SHALL HAVE THE PROPER CURRENT AND VOLTAGE RATING AS REQUIRED. INSTALLATION OF ALL DISCONNECT SWITCHES SHALL BE BY THE ELECTRICAL CONTRACTOR.

B. ALL SAFETY SWITCHES SHALL BE NEMA HEAVY DUTY TYPE AND SHALL CARRY THE UNDERWRITERS' LABORATORIES LABEL. FUSIBLE SWITCHES SHALL INCORPORATE CLASS "R" FUSE REJECTION FEATURE AND SHALL BE BRACED TO WITHSTAND 200,000 AMPERE RMS SYMMETRICAL FAULT CURRENT. SAFETY SWITCHES SHALL CONFORM TO FEDERAL SPECIFICATION W-S-865.

C. PROVIDE HEAVY-DUTY TYPE, SHEET ENCLOSED, SAFETY SWITCHES. THE TYPE, SIZE, AND RATING SHALL BE AS INDICATED ON THE DRAWINGS OR AS REQUIRED BY THE MOTOR OR EQUIPMENT SERVED. THE ENCLOSURE FOR DISCONNECT SWITCHES SHALL BE NEMA TYPE 1 FOR INDOOR USE, NEMA TYPE 4X FOR OUTDOOR USE AND NEMA TYPE 7 FOR EXPLOSION PROOF USE. DISCONNECTS SHALL BE MANUFACTURED BY ALLEN-BRADLEY, GENERAL ELECTRIC, CUTLER-HAMMER APPROVED EQUAL.

D. SWITCHES SHALL INCORPORATE QUICK-MAKE, QUICK-BREAK OPERATING HANDLES. THE MECHANISM SHALL BE AN INTEGRAL PART OF THE BOX, NOT THE COVER, AND SWITCHES SHALL HAVE A COVER INTERLOCK TO PREVENT UNAUTHORIZED OPENING OF THE SWITCH DOOR IN THE ON POSITION OR CLOSING OF THE SWITCH MECHANISM WITH THE DOOR OPEN. CURRENT CARRYING PARTS SHALL BE CONSTRUCTED OF HIGH-CONDUCTIVITY COPPER WITH SILVER-TUNGSTEN TYPE SWITCH CONTACT.

E. FUSE CLIPS SHALL BE POSITIVE PRESSURE TYPE REINFORCED FUSE CLIPS.

F. THE ELECTRICAL CONTRACTOR SHALL FURNISH, INSTALL AND CONNECT ALL POWER WIRING TO ALL MECHANICAL CONTRACTOR FURNISHED EQUIPMENT. THE MECHANICAL CONTRACTOR SHALL FURNISH, INSTALL AND CONNECT ALL CONTROL WIRING TO ALL FURNISHED EQUIPMENT, INCLUDING CONTROL DEVICES, STARTERS AND INTEGRAL DISCONNECT SWITCHES OF CONTRACTOR FURNISHED EQUIPMENT.

VARIABLE FREQUENCY DRIVES (230515)

A. PROVIDE VARIABLE FREQUENCY DRIVES (VFD) AS SPECIFIED HEREIN AND AS SHOWN ON THE CONTRACT DRAWINGS. BASIS OF DESIGN IS ABB MODEL ACH-550. THE ENCLOSURE FOR VFD SHALL BE NEMA TYPE 12 FOR INDOOR USE AND NEMA TYPE 3R FOR OUTDOOR USE. VFD SHALL PROVIDE MICROPROCESSOR-BASED CONTROL FOR THREE-PHASE INDUCTION MOTORS USING PULSE WIDTH MODULATED (PWM) DESIGN, WHICH CONVERTS THE UTILITY INPUT VOLTAGE AND FREQUENCY TO A VARIABLE VOLTAGE AND FREQUENCY OUTPUT VIA A TWO-STEP OPERATION. VFD SHALL HAVE AN EFFICIENCY AT FULL LOAD AND SPEED THAT EXCEEDS 97%. THE EFFICIENCY SHALL EXCEED 90% AT 50% SPEED.

B. VFD SHALL MAINTAIN A MINIMUM LINE SIDE DISPLACEMENT POWER FACTOR OF 0.96, REGARDLESS OF SPEED AND LOAD FOR VFD'S LESS THAN 75 HP. VFD SHALL MAINTAIN A MINIMUM LINE SIDE DISPLACEMENT POWER FACTOR OF .99, REGARDLESS OF SPEED AND LOAD FOR MOTORS GREATER THAN 75 HP. THE VFD'S SHALL HAVE A ONE (1) MINUTE OVERLOAD CURRENT RATING OF 110% FOR LOW OVERLOAD APPLICATIONS. VFD SHALL HAVE AN INTEGRAL EMI/RFI FILTER AND CIRCUIT BREAKER AS STANDARD. THE CURRENT WITHSTAND RATING OF THE OPEN VFD SHALL BE 65,000 AIC.

C. COMMUNICATION CAPABILITY OPTIONS SHALL INCLUDE MODBUS RTU, JOHNSON CONTROLS METASYS N2, BACNET MSTP, BACNET/IP. MODBUS/TCP AND EXPANSION CARD COMMUNICATIONS SHALL INCLUDE LONWORKS. THE EXACT PROTOCOL NEEDED IS THAT WHICH WILL COMMUNICATE WITH THE BAS COMMUNICATION SYSTEM PROVIDED.

D. VFD SHALL HAVE A COOLING FAN(S) THAT IS FIELD REPLACEABLE.

E. VFD SHALL INCLUDE THE FOLLOWING PROTECTIVE FEATURES: OVERCURRENT, OVERVOLTAGE, SYSTEM FAULT, UNDER VOLTAGE, INPUT LINE SUPERVISION, OUTPUT PHASE SUPERVISION, UNDER TEMPERATURE, OVER TEMPERATURE, MOTOR STALLED, MOTOR OVER TEMPERATURE AND MOTOR UNDER LOAD. VFD SHALL PROVIDE GROUND FAULT PROTECTION DURING POWER-UP, STARTING, AND RUNNING.

F. WARRANTY SHALL BE TWENTY-FOUR (24) MONTHS FROM CERTIFIED START-UP DATE. THIS WARRANTY DURATION INCLUDES START-UP BY AN AUTHORIZED SERVICE REPRESENTATIVE AND PARTS, LABOR AND TRAVEL TIME.

CHECK, TEST, START, ADJUST, BALANCE AND INSTRUCTIONS (230593)

A. AFTER INSTALLATION, CHECK ALL EQUIPMENT, AND PERFORM START UP IN ACCORDANCE WITH THE MANUFACTURER'S INSTRUCTIONS.

B. ALL PIPING SHALL BE TESTED AND FREE OF LEAKS.

C. CONCEALED OR INSULATED WORK SHALL REMAIN UNCOVERED UNTIL REQUIRED TESTS HAVE BEEN COMPLETED, BUT IF CONSTRUCTION SCHEDULE REQUIRES IT, ARRANGE FOR PRIOR TESTS ON PARTS OF SYSTEM AS APPROVED BY THE TENANT.

D. BALANCE ALL SYSTEMS, CALIBRATE CONTROLS, CHECK FOR PROPER OPERATION AND SEQUENCE UNDER ALL CONDITIONS AND MAKE ALL NECESSARY ADJUSTMENTS.

E. AFTER INSTALLATION AND EQUIPMENT IS PLACED IN OPERATION, HVAC CONTRACTOR IS RESPONSIBLE FOR BALANCING SYSTEMS. BALANCING SHALL BE PERFORMED BY AN INDEPENDENT AABC CERTIFIED CONTRACTOR.

F. ADJUST AND BALANCE THE AIR SYSTEMS BEFORE HYDRONIC, STEAM, AND REFRIGERANT SYSTEMS. TESTING AND BALANCING SHALL BE DONE IN ACCORDANCE WITH THE MOST RECENT AABC NATIONAL STANDARDS FOR TOTAL SYSTEM BALANCE. GPM'S SHALL BE BALANCED WITHIN 10% OF DESIGN. AFTER ALL AIR SYSTEMS ARE INSTALLED, EACH SUPPLY AIR OUTLET SHALL BE AIR BALANCED TO WITHIN 10% OF THE CFM SHOWN WITH AIR PATTERNS SET AS INDICATED ON DRAWINGS (OR WITHIN 10 CFM WHEN BELOW 100 CFM). FAN RPMS AND ZONE DAMPERS SHALL BE ADJUSTED AND SHEAVES SHALL BE REPLACED AS REQUIRED TO ACHIEVE AIR BALANCE. ALL ZONES OR PORTIONS THEREOF SERVING OTHER SPACES AND WHICH MAY BE AFFECTED BY THE PROJECT SHALL BE TRAVERSED PRIOR TO CONSTRUCTION. THE FINAL AIR BALANCE SHALL RESTORE THESE AIR QUANTITIES. BEFORE AND AFTER AIR QUANTITIES SHALL BE LISTED IN THE AIR BALANCE REPORT

G. SHOULD THE AIR BALANCE REPORT INDICATE UNACCEPTABLE DUCT LEAKAGE, AS DETERMINED BY THE ENGINEER, THEN DUCT LEAKAGE TEST SHALL BE PERFORMED IN ACCORDANCE WITH AABC STANDARDS. DUCT SHALL BE RESEALED AND/OR REPAIRED AS REQUIRED TO MEET DESIGN REQUIREMENTS. ALL, OR PORTIONS OF THE SYSTEM SHALL BE REBALANCED AS REQUIRED UNTIL ALL SYSTEMS ARE WITHIN THE PERFORMANCE STANDARDS LISTED ABOVE.

H. CLEAN ALL MECHANICAL EQUIPMENT AND DUCTWORK OF ALL CONSTRUCTION DUST AT PROJECT COMPLETION. REPLACE ALL FILTERS PRIOR TO AIR BALANCING. PROVIDE ONE SPARE SET OF FILTERS FOR EACH PIECE OF EQUIPMENT TO THE OWNER.

I. START UP AND PLACE ALL SYSTEMS IN OPERATION AND TAG ALL SWITCHES AND CONTROLS WITH PERMANENT LABELS.

J. PROVIDE OWNER TRAINING AND DEMONSTRATION OF ALL MECHANICAL SYSTEMS AND EQUIPMENT. INSTRUCT OWNER ON PROPER OPERATION AND PREVENTATIVE MAINTENANCE OF SYSTEM. SUBMIT OPERATING AND MAINTENANCE MANUAL ON ALL EQUIPMENT AND SYSTEMS.

K. AIR QUALITY TESTING SHALL BE PERFORMED BY AN AABC CERTIFIED CONTRACTOR, THIS CONTRACTOR SHALL BE ACCEPTABLE UPON APPROVAL OF THE ENGINEER. CONDUCT BASELINE INDOOR AIR QUALITY TESTING AFTER CONSTRUCTION ENDS AND BEFORE OCCUPANCY. TESTING PROCEDURES SHALL BE PER THE U.S. E.P.A. COMPENDIUM OF METHODS FOR THE DETERMINATION OF AIR POLLUTANTS IN INDOOR AIR AND AS DETAILED BY THE U.S.G.B.C. IN THE LEED-NC VERSION 3.0 REFERENCE GUIDE. CONTRACTOR SHALL DEMONSTRATE THAT THE CONTAMINANT MAXIMUM CONCENTRATIONS LISTED UNDER EQ CREDIT 3.2 IN THE LEED REFERENCE GUIDE ARE NOT EXCEEDED. CONTRACTOR SHALL INCLUDE ONE ADDITIONAL SAMPLING / RE-TESTING OF EACH BUILDING AREA IN HIS BID.

8/24/2025 4:52:45

VILLAGE OF OAK PARK
CONSTRUCTION DOCUMENT(S)
REVIEWED FOR COMPLIANCE
KEEP A PRINTED APPROVED COPY OF THE PLANS ON SITE AT ALL TIMES FOR CONTRACTORS AND INSPECTORS

625 W Adams Street – 19th Floor
Chicago, IL 60661
312.320.3668

LICENSED PROFESSIONAL ENGINEER
ALEXANDER G. RADKOFF
062-073334
OF ILLINOIS

DESIGN FIRM LIC. NO: 184008703-002
DESIGN FIRM LIC. NO. EXP.: 04.30.2027
ILLINOIS LICENCE NUMBER: 062.073334
LIC. EXP.: 11.30. 2025

1144 Lake Street, LLC

BASE BUILDING MECHANICAL RENOVATIONS

1144 W LAKE ST
OAK PARK, IL 60301

NO.	DESCRIPTION	DATE
2	PERMIT REVISION 1	09/19/2025
1	ISSUED FOR PERMIT	08/28/2025

JOB NO.: 25.068

SCALE: AS SHOWN

TITLE: MECHANICAL SPECIFICATIONS

SHEET: M0.4

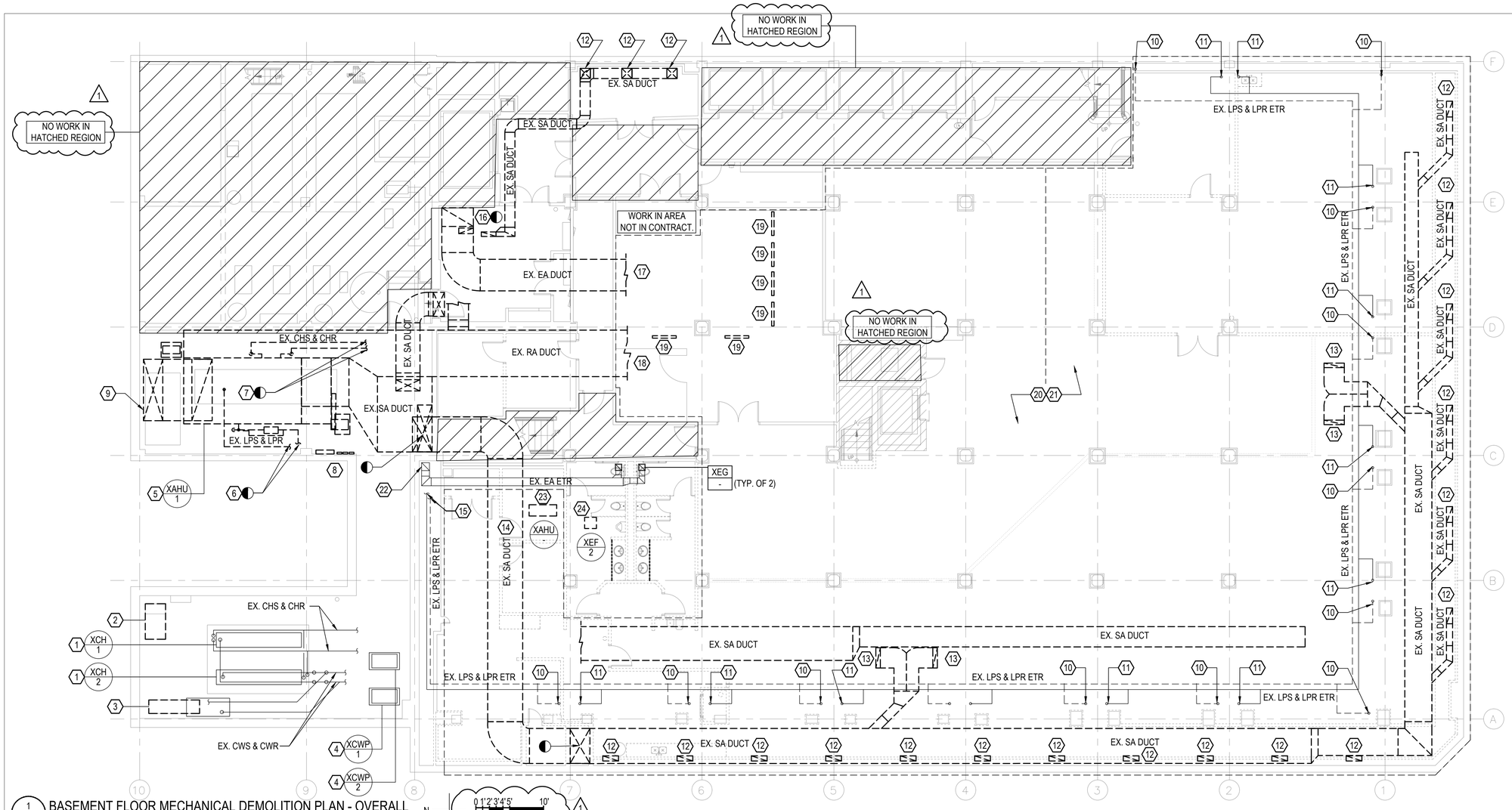

1 BASEMENT FLOOR MECHANICAL DEMOLITION PLAN - OVERALL
M2.1 1/8" = 1'-0"

N

0 1' 2' 3' 4' 5' 10'
SCALE: 1/8" = 1'-0"

MECHANICAL GENERAL NOTES:

1. MECHANICAL CONTRACTOR SHALL VERIFY EXISTING CONDITIONS AND LOCATIONS OF EQUIPMENT, DUCTWORK, PIPING AND GRILLES, REGISTERS AND DIFFUSERS PRIOR TO BID. MC SHALL VERIFY EQUIPMENT IS IN GOOD WORKING ORDER AND THAT ANY COMPONENTS OF EXISTING EQUIPMENT TO REMAIN WITHIN SCOPE OF WORK ARE REPLACED PRIOR TO RE-INSTALLATION. GRILLES, REGISTERS, AND DIFFUSERS IDENTIFIED TO BE EXISTING TO REMAIN SHALL BE CLEANED OF DUCT AND DEBRIS PRIOR TO FINAL REINSTALLATION/RE-USE AND EQUIPMENT STARTUP.
2. MC SHALL VERIFY ALL EQUIPMENT TO REMAIN IS FUNCTIONING AND IS IN GOOD WORKING CONDITION.
3. MC SHALL COORDINATE WITH GC TO PATCH ALL EXISTING TO REMAIN WALL, FLOOR AND CEILING PENETRATIONS TO MATCH EXISTING MATERIAL AT ALL DEMOLISHED PIPE, DUCT AND MECHANICAL SYSTEMS RELATED PENETRATIONS.
4. MC SHALL PATCH EXISTING WALLS AND CEILINGS AS NECESSARY TO MATCH EXISTING WALL CONSTRUCTION AT LOCATIONS OF DEMOLISHED MECHANICAL WORK. MC SHALL PROVIDE PAINTING OF WALL PARTITIONS FROM VISUAL STOPPING POINT TO VISUAL STOPPING POINT (I.E. CORNER TO CORNER) TO MATCH EXISTING COLOR OR NEW WALL COLOR IDENTIFIED IN ARCHITECTURAL DRAWINGS.
5. MC SHALL ENGAGE A CERTIFIED HVAC EQUIPMENT TESTING COMPANY TO PERFORM OPERATIONAL AND FUNCTIONAL TESTS ON EXISTING AIR HANDLING UNIT AHU-2. A REPORT SHALL BE GENERATED AND PROVIDED TO THE OWNER AND EOR FOR REVIEW DURING THE DEMOLITION PHASE OF WORK. MC SHALL ENGAGE A THIRD PARTY TESTING, ADJUSTING, AND BALANCING AGENCY TO CONDUCT A TAB BALANCING TEST REPORT OF ALL EXISTING TO REMAIN GRILLES, REGISTERS AND DIFFUSERS ASSOCIATED WITH AHU-2. REPORT SHALL BE PROVIDED TO OWNER PRIOR TO DEMOLITION COMMENCING.
6. MC SHALL COORDINATE WITH BUILDING OWNER AND BUILDING ENGINEER TO ENSURE STEAM SYSTEM IS NOT OPERATIONAL PRIOR TO ONSET OF WORK AND CONSTRUCTION. MC SHALL VERIFY SYSTEM IS DRAINED COMPLETELY PRIOR TO WORK COMMENCING.

MECHANICAL KEY NOTES: 1

1. EXISTING CHILLER AND ALL ASSOCIATED CONTROLS, APPURTENANCES AND PIPING TO REMAIN. MC SHALL VERIFY EXACT LOCATION AND SIZE IN FIELD.
2. EXISTING ABANDONED AND DECOMMISSIONED MECHANICAL EQUIPMENT AND ALL ASSOCIATED APPURTENANCES SHALL BE DEMOLISHED IN THEIR ENTIRETY. VERIFY EXACT LOCATION AND SIZE IN FIELD.
3. EXISTING ABANDONED AND DECOMMISSIONED CHILLER AND ALL ASSOCIATED APPURTENANCES SHALL BE DEMOLISHED IN THEIR ENTIRETY. MC SHALL DEMOLISH CHILLED WATER AND CONDENSER WATER PIPING SERVING CHILLER BACK TO NEAREST SHUTOFF VALVE. VERIFY EXACT LOCATION, SIZE AND ROUTING OF ASSOCIATED EQUIPMENT AND PIPING IN FIELD.
4. EXISTING CONDENSER WATER PUMPS AND ALL ASSOCIATED CONTROLS, APPURTENANCES AND PIPING TO REMAIN. MC SHALL VERIFY EXACT LOCATION AND SIZE IN FIELD.
5. EXISTING AIR HANDLING UNIT, CONCRETE HOUSEKEEPING PAD, PLENUM BOX, FAN MOTOR, CONTROLS AND ALL ASSOCIATED APPURTENANCES TO BE DEMOLISHED IN ITS ENTIRETY. MC SHALL COORDINATE WITH EC TO DEMOLISH EXISTING CIRCUITING, DISCONNECT AND FEEDER BACK TO ASSOCIATED PANELBOARD. MC SHALL COORDINATE WITH GC TO DEMOLISH EXISTING CONCRETE HOUSEKEEP PAD. VERIFY EXACT LOCATION AND ORIENTATION IN FIELD.
6. EXISTING LOW PRESSURE STEAM PIPING AND CONDENSATE RETURN PIPING, INSULATION, VALVES, STRAINER, STEAM TRAP, APPURTENANCES AND ASSOCIATED HANGERS AND FASTENERS SHALL BE DEMOLISHED IN THEIR ENTIRETY BACK TO PIPING MAIN. STEAM PIPING AND CONDENSATE RETURN PIPING SHALL BE CAPPED AT MAIN CONNECTION. VERIFY SIZE AND ROUTING OF PIPING IN FIELD.
7. EXISTING CHILLED WATER SUPPLY AND RETURN PIPING, INSULATION AND APPURTENANCES SHALL BE DEMOLISHED BACK TO PIPING MAINS. SUPPLY AND RETURN PIPING SHALL BE CAPPED AT MAIN CONNECTION. VERIFY SIZE AND ROUTING OF PIPING IN FIELD.
8. EXISTING AIR HANDLING UNIT CONTROLS AND ALL ASSOCIATED POWER AND APPURTENANCES SHALL BE DEMOLISHED IN THEIR ENTIRETY. VERIFY QUANTITY OF LOCATION OF CONTROL DEVICES IN FIELD.
9. EXISTING PLENUM BOX AND OUTSIDE AIR DUCTWORK SHALL BE DEMOLISHED IN ITS ENTIRETY. MC SHALL COORDINATE WITH GC TO PATCH EXISTING FLOOR OPENING WHERE REQUIRED TO MATCH EXISTING FLOOR CONSTRUCTION. VERIFY DIMENSIONS OF OPENING IN FIELD.
10. EXISTING STEAM CONDENSATE RETURN PIPING UP TO FLOOR ABOVE TO REMAIN. VERIFY EXACT LOCATION AND ROUTING OF PIPING IN FIELD.
11. EXISTING LOW PRESSURE STEAM SUPPLY PIPING UP TO FLOOR ABOVE TO REMAIN. VERIFY EXACT LOCATION AND ROUTING OF PIPING IN FIELD.
12. EXISTING SUPPLY DIFFUSER AND ASSOCIATED BRANCH DUCTWORK SHALL BE DEMOLISHED IN ITS ENTIRETY. VERIFY EXACT LOCATION, SIZE AND ROUTING IN FIELD.
13. EXISTING SUPPLY AIR DUCTWORK UP TO FLOOR ABOVE SHALL BE DEMOLISHED IN ITS ENTIRETY. MC SHALL COORDINATE WITH GC TO PATCH EXISTING FLOOR OPENING WHERE REQUIRED TO MATCH EXISTING FLOOR CONSTRUCTION. VERIFY DIMENSIONS OF OPENING IN FIELD.
14. EXISTING SUPPLY DUCTWORK LOCATED UNDERGROUND SHALL BE ABANDONED IN PLACE AND SHALL BE CAPPED SUCH THAT DUCTWORK IS EFFECTIVELY SEALED FROM OCCUPIABLE SPACE. MC SHALL COORDINATE WITH GC TO PATCH FLOOR OPENING TO MATCH EXISTING FLOOR CONSTRUCTION AT FLOOR OPENINGS.
15. EXISTING LOW PRESSURE STEAM SUPPLY PIPING AND CONDENSATE RETURN PIPING TO REMAIN. VERIFY EXACT SIZE, ROUTING AND LOCATION IN FIELD.
16. EXISTING EXHAUST AIR DUCTWORK UP TO FLOOR SHALL BE DISCONNECTED AT FLOOR PENETRATION AND SHALL BE CAPPED FOR FUTURE CONNECTION. VERIFY DIMENSIONS OF OPENING IN FIELD.
17. EXISTING EXHAUST DUCTWORK AND ALL ASSOCIATED APPURTENANCES SHALL BE DEMOLISHED IN THEIR ENTIRETY. VERIFY EXACT SIZE, ROUTING AND LOCATION IN FIELD.
18. EXISTING SUPPLY DUCTWORK AND ALL ASSOCIATED APPURTENANCES SHALL BE DEMOLISHED IN THEIR ENTIRETY. VERIFY EXACT SIZE, ROUTING AND LOCATION IN FIELD.
19. EXISTING EXHAUST GRILLE AND ASSOCIATED BRANCH DUCTWORK SHALL BE DEMOLISHED IN ITS ENTIRETY. VERIFY EXACT LOCATION, SIZE AND ROUTING IN FIELD.
20. UNLESS OTHERWISE NOTED, ALL DUCTWORK LOCATED WITHIN BOUNDED REGION SHALL BE DEMOLISHED IN ITS ENTIRETY. MC SHALL COORDINATE WITH GC TO PATCH ALL EXISTING TO REMAIN WALLS, CEILINGS, FLOORS AND STRUCTURAL MEMBERS AS REQUIRED TO MATCH EXISTING CONSTRUCTION. MC SHALL VERIFY LOCATION, SIZE AND ROUTING OF ALL EXISTING DUCTWORK WITHIN BOUNDED REGION.
21. UNLESS OTHERWISE NOTED, ALL LOW PRESSURE STEAM SUPPLY PIPING AND CONDENSATE RETURN PIPING SHALL REMAIN WITHIN BOUND REGION. MC SHALL VERIFY LOCATION, SIZE AND ROUTING OF ALL EXISTING PIPING WITHIN BOUNDED REGION.
22. EXISTING EXHAUST AIR DUCTWORK AND ALL ASSOCIATED APPURTENANCES TO REMAIN. VERIFY EXACT ROUTING AND SIZE IN FIELD.
23. EXISTING AIR HANDLER AND ALL ASSOCIATED APPURTENANCES TO BE DEMOLISHED IN ITS ENTIRETY. MC SHALL COORDINATE WITH EC TO DEMOLISH EXISTING CIRCUITING, DISCONNECT AND FEEDER BACK TO ASSOCIATED PANELBOARD.
24. EXISTING EXHAUST FAN AND ALL ASSOCIATED APPURTENANCES TO BE DEMOLISHED IN ITS ENTIRETY. MC SHALL COORDINATE WITH EC TO DEMOLISH EXISTING CIRCUITING, DISCONNECT AND FEEDER BACK TO ASSOCIATED PANELBOARD.

VILLAGE OF OAK PARK
CONSTRUCTION DOCUMENT(S)
REVIEWED FOR COMPLIANCE
KEEP A PRINTED APPROVED COPY OF THE PLANS ON SITE AT ALL TIMES FOR CONTRACTORS AND INSPECTORS

625 W Adams Street – 19th Floor
Chicago, IL 60661
312.320.3668

LICENSED PROFESSIONAL ENGINEER
ALEXANDER G. RADKOFF
062-073334
OF ILLINOIS

DESIGN FIRM LIC. NO: 184008703-002
DESIGN FIRM LIC. NO. EXP.: 04.30.2027
ILLINOIS LICENCE NUMBER: 062.073334
LIC. EXP.: 11.30. 2025

1144 Lake Street, LLC

BASE BUILDING MECHANICAL RENOVATIONS

1144 W LAKE ST
OAK PARK, IL 60301

NO.	DESCRIPTION	DATE
1	PERMIT REVISION 1	09/19/2025
1	ISSUED FOR PERMIT	08/25/2025

JOB NO.: 25.068

SCALE: AS SHOWN

TITLE: BASEMENT FLOOR MECHANICAL DEMO PLAN

SHEET: M1.1

8/24/2025 4:52:45 PM

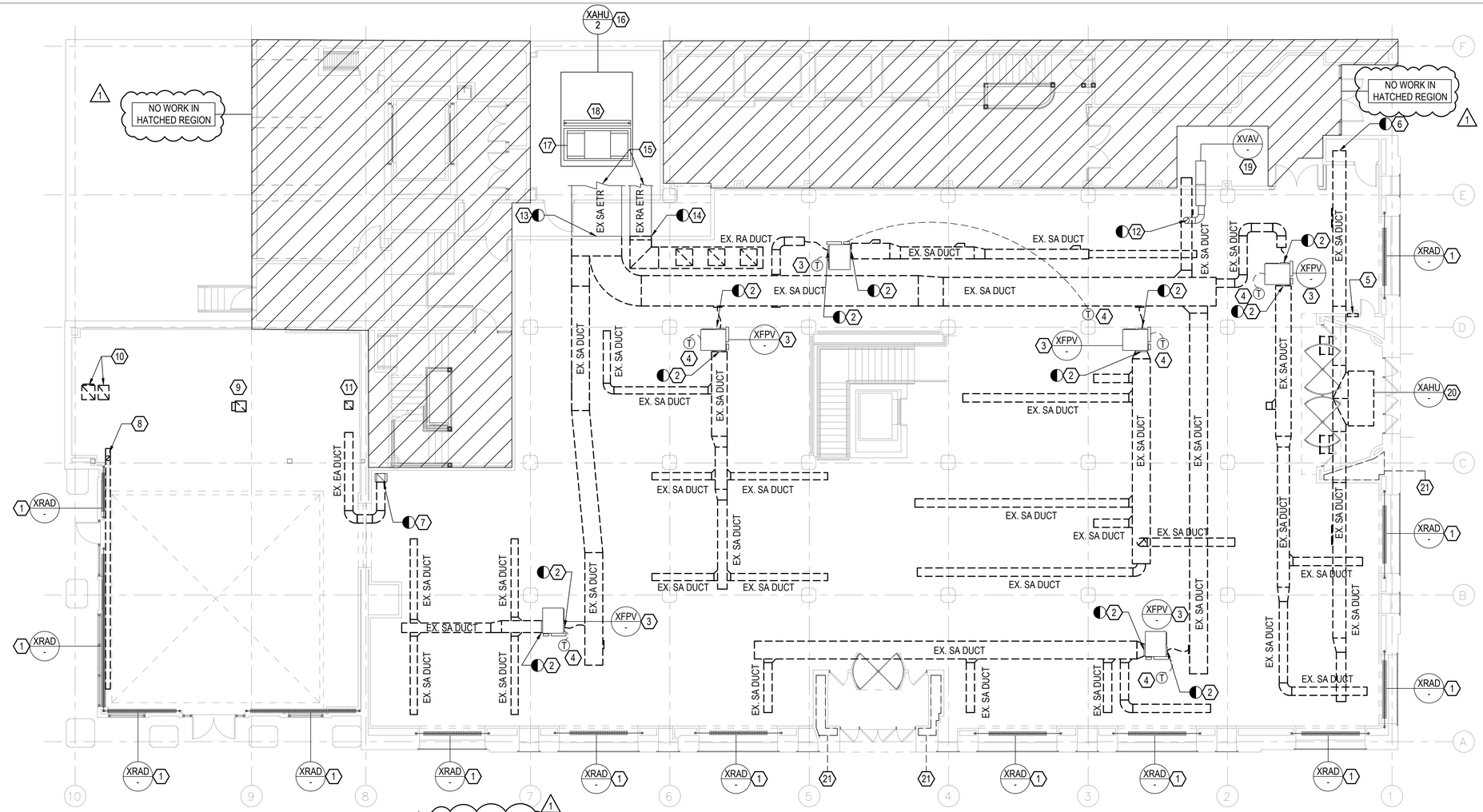

1 GROUND FLOOR MECHANICAL DEMOLITION PLAN - OVERALL
M1.2 1/8" = 1'-0"

N

0 1' 2' 3' 4' 5' 10'
SCALE: 1/8" = 1'-0"

MECHANICAL GENERAL NOTES:

1. MECHANICAL CONTRACTOR SHALL VERIFY EXISTING CONDITIONS AND LOCATIONS OF EQUIPMENT, DUCTWORK, PIPING AND GRILLES, REGISTERS AND DIFFUSERS PRIOR TO BID. MC SHALL VERIFY EQUIPMENT IS IN GOOD WORKING ORDER AND THAT ANY COMPONENTS OF EXISTING EQUIPMENT TO REMAIN WITHIN SCOPE OF WORK ARE REPLACED PRIOR TO RE-INSTALLATION. GRILLES, REGISTERS, AND DIFFUSERS IDENTIFIED TO BE EXISTING TO REMAIN SHALL BE CLEANED OF DUCT AND DEBRIS PRIOR TO FINAL REINSTALLATION/RE-USE AND EQUIPMENT STARTUP.
2. MC SHALL VERIFY ALL EQUIPMENT TO REMAIN IS FUNCTIONING AND IS IN GOOD WORKING CONDITION.
3. MC SHALL COORDINATE WITH GC TO PATCH ALL EXISTING TO REMAIN WALL, FLOOR AND CEILING PENETRATIONS TO MATCH EXISTING MATERIAL AT ALL DEMOLISHED PIPE, DUCT AND MECHANICAL SYSTEMS RELATED PENETRATIONS.
4. MC SHALL PATCH EXISTING WALLS AND CEILINGS AS NECESSARY TO MATCH EXISTING WALL CONSTRUCTION AT LOCATIONS OF DEMOLISHED MECHANICAL WORK. MC SHALL PROVIDE PAINTING OF WALL PARTITIONS FROM VISUAL STOPPING POINT TO VISUAL STOPPING POINT (I.E. CORNER TO CORNER) TO MATCH EXISTING COLOR OR NEW WALL COLOR IDENTIFIED IN ARCHITECTURAL DRAWINGS.
5. MC SHALL ENGAGE A CERTIFIED HVAC EQUIPMENT TESTING COMPANY TO PERFORM OPERATIONAL AND FUNCTIONAL TESTS ON EXISTING AIR HANDLING UNIT AHU-2. A REPORT SHALL BE GENERATED AND PROVIDED TO THE OWNER AND EOR FOR REVIEW DURING THE DEMOLITION PHASE OF WORK. MC SHALL ENGAGE A THIRD PARTY TESTING, ADJUSTING, AND BALANCING AGENCY TO CONDUCT A TAB BALANCING TEST REPORT OF ALL EXISTING TO REMAIN GRILLES, REGISTERS AND DIFFUSERS ASSOCIATED WITH AHU-2. REPORT SHALL BE PROVIDED TO OWNER PRIOR TO DEMOLITION COMMENCING.
6. MC SHALL COORDINATE WITH BUILDING OWNER AND BUILDING ENGINEER TO ENSURE STEAM SYSTEM IS NOT OPERATIONAL PRIOR TO ONSET OF WORK AND CONSTRUCTION. MC SHALL VERIFY SYSTEM IS DRAINED COMPLETELY PRIOR TO WORK COMMENCING.

MECHANICAL KEY NOTES: 1

1. EXISTING STEAM FIN TUBE RADIATOR, RADIATOR VALVE, CONTROLS AND APPURTENANCES TO REMAIN. VERIFY SIZE AND LOCATION IN FIELD. STEAM SUPPLY PIPING AND STEAM CONDENSATE PIPING DOWN TO FLOOR BELOW TO REMAIN.
2. EXISTING DUCTWORK SHALL BE DISCONNECTED FROM EXISTING TO REMAIN PARALLEL FAN POWERED BOX (FPV). DUCTWORK AND ALL ASSOCIATED INSULATION AND APPURTENANCES SHALL BE DEMOLISHED IN THEIR ENTIRETY. MC SHALL VERIFY LOCATION, SIZE AND ROUTING IN FIELD. SUPPLY AND INTAKE OPENINGS OF FPV SHALL BE STUBBED OPEN INTO THE SPACE.
3. EXISTING PARALLEL FAN POWERED BOX WITH ELECTRIC RESISTANCE REHEAT COIL AND ALL ASSOCIATED APPURTENANCES TO REMAIN. EXISTING FPV SHALL BE UTILIZED FOR TEMPORARY HEAT WITHIN THE SPACE DURING CORE AND SHELL PHASE. MC SHALL LOCKOUT HIGH STAGES OF HEATING SUCH THAT ELECTRIC HEATER IS COMPATIBLE WITH FAN POWERED AIRFLOW ONLY. MC SHALL VERIFY FPV FEATURES AIRFLOW SWITCH, HIGH LIMIT TEMPERATURE SENSOR AND CUTOFF DEVICE. VERIFY EXACT LOCATION AND ORIENTATION OF UNIT IN FIELD.
4. EXISTING THERMOSTAT SERVING FAN POWERED BOX AND ALL ASSOCIATED CONTROL WIRING SHALL BE RELOCATED AND PLACED ON TOP OF ASSOCIATED FAN POWERED BOX. VERIFY EXACT LOCATION OF THERMOSTAT IN FIELD.
5. EXISTING DECOMMISSIONED INTAKE AIRFLOW AND PURGE CONTROLS AND ALL ASSOCIATED APPURTENANCES SHALL BE DEMOLISHED IN THEIR ENTIRETY. VERIFY EXACT LOCATION IN FIELD.
6. EXISTING DUCTWORK AND ALL ASSOCIATED APPURTENANCES SHALL BE DEMOLISHED IN THEIR ENTIRETY UP TO THIS POINT. EXISTING DUCTWORK OUT OF SCOPE TO REMAIN. VERIFY EXACT SIZE, ROUTING AND LOCATION IN FIELD.
7. EXISTING EXHAUST DUCTWORK SHALL BE DISCONNECTED FROM EXISTING TO EXHAUST DUCTWORK AT THIS LOCATION. DUCTWORK AND ALL ASSOCIATED INSULATION AND APPURTENANCES SHALL BE DEMOLISHED IN THEIR ENTIRETY. MC SHALL VERIFY LOCATION, SIZE AND ROUTING IN FIELD. ETR DUCTWORK OPENING SHALL BE PROVIDED WITH PROTECTIVE WRAP OR CAP DURING CONSTRUCTION.
8. EXISTING SUPPLY DUCTWORK AND ALL ASSOCIATED APPURTENANCES SHALL BE DEMOLISHED IN THEIR ENTIRETY. VERIFY EXACT SIZE, ROUTING AND LOCATION IN FIELD.
9. EXISTING DUCTWORK AND ALL ASSOCIATED APPURTENANCES SHALL BE DEMOLISHED IN THEIR ENTIRETY. MC SHALL COORDINATE WITH GC TO PATCH EXISTING ROOF OPENING TO MATCH EXISTING CONSTRUCTION. VERIFY EXACT DIMENSIONS AND LOCATIONS IN FIELD.
10. EXISTING SUPPLY AND RETURN DUCTWORK AND ALL ASSOCIATED APPURTENANCES SHALL BE DEMOLISHED IN THEIR ENTIRETY. MC SHALL COORDINATE WITH GC TO PATCH EXISTING ROOF OPENING TO MATCH EXISTING CONSTRUCTION. VERIFY EXACT DIMENSIONS AND LOCATIONS IN FIELD.
11. EXISTING EXHAUST DUCTWORK AND ALL ASSOCIATED APPURTENANCES SHALL BE DEMOLISHED IN THEIR ENTIRETY. MC SHALL COORDINATE WITH GC TO PATCH EXISTING ROOF OPENING TO MATCH EXISTING CONSTRUCTION. VERIFY EXACT DIMENSIONS AND LOCATIONS IN FIELD.
12. EXISTING SUPPLY DUCTWORK BRANCH SHALL BE DISCONNECTED FROM EXISTING DUCTWORK AND SHALL REMAIN. ETR DUCTWORK OPENING SHALL BE PROVIDED WITH PROTECTIVE WRAP OR CAP DURING CONSTRUCTION.
13. EXISTING SUPPLY DUCTWORK TO REMAIN SHALL BE DISCONNECTED FROM EXISTING DUCTWORK TO BE DEMOLISHED. ETR DUCTWORK OPENING SHALL BE PROVIDED WITH PERMANENT DUCT CAP DUCT OPENING.
14. EXISTING RETURN DUCTWORK TO REMAIN SHALL BE DISCONNECTED FROM EXISTING DUCTWORK TO BE DEMOLISHED. ETR DUCTWORK OPENING SHALL BE PROVIDED WITH PERMANENT DUCT CAP DUCT OPENING.
15. EXISTING DUCTWORK CONTINUES OUT OF PROJECT SCOPE WITHIN MECHANICAL ROOM.
16. EXISTING AIR HANDLING UNIT AHU-2 AND ALL ASSOCIATED APPURTENANCES TO REMAIN.
17. MC SHALL RE-BALANCE AHU-2 FAN MOTOR AND SHALL REPLACE FAN MOTOR, BELT, AND SHEAVE AS NECESSARY TO MATCH 2ND FLOOR AND REMAINING GROUND FLOOR VAV BOX EQUIPMENT SERVED BY AIR HANDLER.
18. EXISTING CHILLED WATER COIL TO REMAIN. ASSOCIATED TWO WAY CONTROL VALVE SHALL BE RE-BALANCED TO RESTRICT FLOW THROUGH CHILLED WATER COIL. FINAL FLOW SETTING SHALL BE DETERMINED AS PART OF EOR'S EVALUATION OF AHU-2 TAB REPORT.
19. EXISTING SINGLE DUCT VARIABLE AIR VOLUME BOX WITH ELECTRIC RESISTANCE REHEAT COIL AND ALL ASSOCIATED APPURTENANCES TO REMAIN. VERIFY EXACT LOCATION AND ORIENTATION OF UNIT IN FIELD.
20. EXISTING FAN COIL UNIT, STEAM PIPING SUPPLY AND CONDENSATE RETURN PIPING AND ALL ASSOCIATED APPURTENANCES TO BE DEMOLISHED IN THEIR ENTIRETY. MC SHALL COORDINATE WITH EC TO DEMOLISH EXISTING CIRCUITING, DISCONNECT AND FEEDER BACK TO ASSOCIATED PANELBOARD. MC SHALL CAP SUPPLY PIPING AND CONDENSATE RETURN PIPING WITHIN VESTIBULE CEILING. MC SHALL COORDINATE WITH GC TO PATCH EXISTING FLOOR OPENING TO MATCH EXISTING FLOOR CONSTRUCTION. VERIFY EXACT LOCATION AND ORIENTATION IN FIELD.
21. ALL PIPING SHALL WITHIN CHASE SHALL SHALL BE EXISTING TO REMAIN. STEAM SUPPLY PIPING AND CONDENSATE RETURN PIPING ASSOCIATED WITH EXISTING STEAM HEATERS SERVING VESTIBULES SHALL BE ABANDONED IN PLACE AND DECOMMISSIONED. MC SHALL VERIFY EXACT ROUTING, LOCATION AND SIZE OF PIPING IN FIELD.

8/24/2025 4:52:45 PM

VILLAGE OF OAK PARK
CONSTRUCTION DOCUMENT(S)
REVIEWED FOR COMPLIANCE
KEEP A PRINTED APPROVED COPY OF THE PLANS ON SITE AT ALL TIMES FOR CONTRACTORS AND INSPECTORS

625 W Adams Street – 19th Floor
Chicago, IL 60661
312.320.3668

LICENSED PROFESSIONAL ENGINEER
ALEXANDER G. RADKOFF
062-073334
OF ILLINOIS

DESIGN FIRM LIC. NO: 184008703-002
DESIGN FIRM LIC. NO. EXP.: 04.30.2027
ILLINOIS LICENCE NUMBER: 062.073334
LIC. EXP.: 11.30. 2025

1144 Lake Street, LLC

BASE BUILDING MECHANICAL RENOVATIONS

1144 W LAKE ST
OAK PARK, IL 60301

NO.	DESCRIPTION	DATE
1	PERMIT REVISION 1	09/19/2025
	ISSUED FOR PERMIT	08/25/2025

JOB NO.: 25.068

SCALE: AS SHOWN

TITLE: GROUND FLOOR MECHANICAL DEMO PLAN

SHEET: M1.2

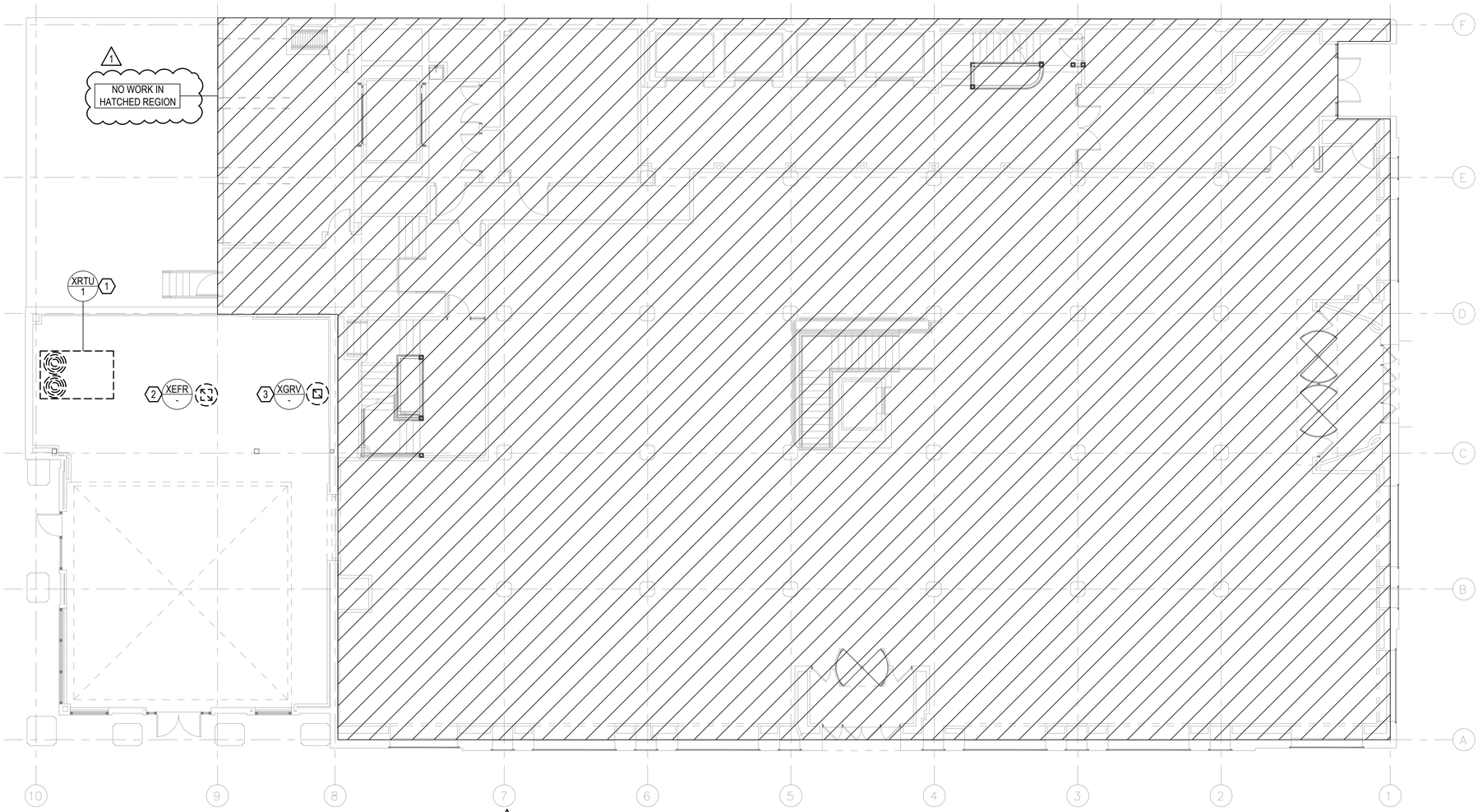

1 / M1.3 LOW ROOF MECHANICAL DEMOLITION PLAN - OVERALL
1/8" = 1'-0"

N 0 1'2'3'4'5' 10' SCALE: 1/8" = 1'-0"

MECHANICAL GENERAL NOTES:

1. MECHANICAL CONTRACTOR SHALL VERIFY EXISTING CONDITIONS AND LOCATIONS OF EQUIPMENT, DUCTWORK, PIPING AND GRILLES, REGISTERS AND DIFFUSERS PRIOR TO BID. MC SHALL VERIFY EQUIPMENT IS IN GOOD WORKING ORDER AND THAT ANY COMPONENTS OF EXISTING EQUIPMENT TO REMAIN WITHIN SCOPE OF WORK ARE REPLACED PRIOR TO RE-INSTALLATION. GRILLES, REGISTERS, AND DIFFUSERS IDENTIFIED TO BE EXISTING TO REMAIN SHALL BE CLEANED OF DUCT AND DEBRIS PRIOR TO FINAL REINSTALLATION/RE-USE AND EQUIPMENT STARTUP.
2. MC SHALL VERIFY ALL EQUIPMENT TO REMAIN IS FUNCTIONING AND IS IN GOOD WORKING CONDITION.
3. MC SHALL COORDINATE WITH GC TO PATCH ALL EXISTING TO REMAIN WALL, FLOOR AND CEILING PENETRATIONS TO MATCH EXISTING MATERIAL AT ALL DEMOLISHED PIPE, DUCT AND MECHANICAL SYSTEMS RELATED PENETRATIONS.
4. MC SHALL PATCH EXISTING WALLS, ROOF, CEILINGS AS NECESSARY TO MATCH EXISTING WALL CONSTRUCTION AT LOCATIONS OF DEMOLISHED MECHANICAL WORK. MC SHALL PROVIDE PAINTING OF WALL PARTITIONS FROM VISUAL STOPPING POINT TO VISUAL STOPPING POINT (I.E. CORNER TO CORNER) TO MATCH EXISTING COLOR OR NEW WALL COLOR IDENTIFIED IN ARCHITECTURAL DRAWINGS.

MECHANICAL KEY NOTES: 1

1. EXISTING ROOFTOP UNIT, ROOF CURB AND ALL ASSOCIATED APPURTENANCES TO BE DEMOLISHED IN ITS ENTIRETY. MC SHALL COORDINATE WITH EC TO DEMOLISH EXISTING CIRCUITING, DISCONNECT AND FEEDER BACK TO ASSOCIATED PANELBOARD. MC SHALL COORDINATE WITH PC TO DISCONNECT AND CAP NATURAL GAS PIPING SERVING ROOFTOP UNIT. MC SHALL COORDINATE WITH GC TO PATCH EXISTING ROOF OPENING TO MATCH EXISTING ROOF CONSTRUCTION. VERIFY EXACT LOCATION AND ORIENTATION IN FIELD.
2. EXISTING EXHAUST FAN, ROOF CURB AND ALL ASSOCIATED APPURTENANCES TO BE DEMOLISHED IN ITS ENTIRETY. MC SHALL COORDINATE WITH EC TO DEMOLISH EXISTING CIRCUITING, DISCONNECT AND FEEDER BACK TO ASSOCIATED PANELBOARD. MC SHALL COORDINATE WITH GC TO PATCH EXISTING ROOF OPENING TO MATCH EXISTING ROOF CONSTRUCTION. VERIFY EXACT LOCATION AND ORIENTATION IN FIELD.
3. EXISTING GRAVITY RELIEF VENTILATOR, ROOF CURB AND ALL ASSOCIATED APPURTENANCES TO BE DEMOLISHED IN ITS ENTIRETY. MC SHALL COORDINATE WITH GC TO PATCH EXISTING ROOF OPENING TO MATCH EXISTING ROOF CONSTRUCTION. VERIFY EXACT LOCATION AND ORIENTATION IN FIELD.

8/24/2025 4:52:45 PM

VILLAGE OF OAK PARK
CONSTRUCTION DOCUMENT(S)
REVIEWED FOR COMPLIANCE
KEEP A PRINTED APPROVED COPY OF THE PLANS ON SITE AT ALL TIMES FOR CONTRACTORS AND INSPECTORS

625 W Adams Street – 19th Floor
Chicago, IL 60661
312.320.3668

LICENSED PROFESSIONAL ENGINEER
ALEXANDER G. RADKOFF
062-073334
OF ILLINOIS

DESIGN FIRM LIC. NO: 184008703-002
DESIGN FIRM LIC. NO. EXP.: 04.30.2027
ILLINOIS LICENCE NUMBER: 062.073334
LIC. EXP.: 11.30. 2025

1144 Lake Street, LLC

BASE BUILDING MECHANICAL RENOVATIONS

1144 W LAKE ST
OAK PARK, IL 60301

NO.	DESCRIPTION	DATE
1	PERMIT REVISION 1	09/19/2025
1	ISSUED FOR PERMIT	08/25/2025

JOB NO.: 25.068

SCALE: AS SHOWN

TITLE: LOW ROOF MECHANICAL DEMO PLAN

SHEET: M1.3

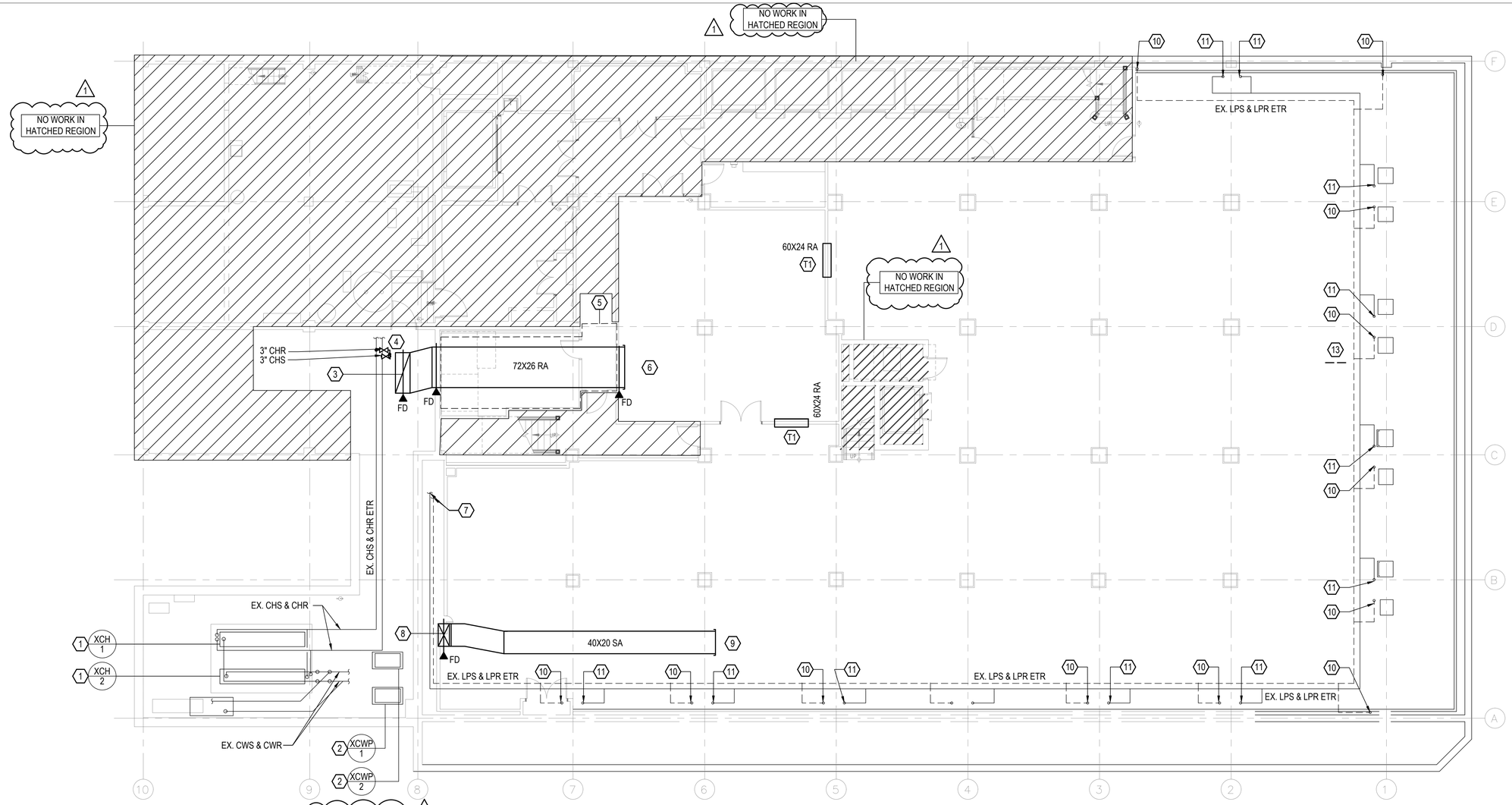

1 M2.1 BASEMENT FLOOR MECHANICAL PLAN - OVERALL
1/8" = 1'-0"

MECHANICAL GENERAL NOTES:

1. FIRE STOP ALL FIRE RATED FLOORS, CEILINGS, AND WALLS AS REQUIRED BY CODE. PENETRATIONS INTO OR THROUGH FIRE RESISTANCE RATED WALLS SHALL COMPLY WITH ILLINOIS BUILDING CODE CHAPTER 7.
2. MC SHALL VERIFY THAT EXHAUST AIR TERMINATIONS CONVEYING ENVIRONMENTAL EXHAUST SHALL BE LOCATED A MINIMUM OF 10 FEET FROM ALL OUTSIDE FRESH AIR INTAKES AND A MINIMUM OF 3 FEET FROM OPERABLE OPENINGS.
3. ALL MECHANICAL EQUIPMENT, SENSORS AND DAMPERS LOCATED ABOVE CEILINGS OR WITHIN WALLS SHALL BE PROVIDED WITH ACCESS PANELS SIZED IN ACCORDANCE WITH MANUFACTURER;S INSTALLATION REQUIREMENTS AND SUCH THAT THE FULL REMOVAL OF THE EQUIPMENT AND/OR DAMPER IS POSSIBLE. PROVIDE RATED ACCESS PANELS FOR ALL ACCESS PANELS LOCATED WITHIN RATED CEILINGS OR WALLS. ACCESS PANELS SHALL BE TAMPER AND VANDAL PROOF.
4. CONDENSATE DRAIN PIPING SHALL BE SLOPED NO LESS THAN 1/4" PER LINEAL FOOT OF HORIZONTAL RUN. PIPING SHALL BE SLOPED TOWARDS POINT OF TERMINATION.
5. MC SHALL COORDINATE SUPPLY, RETURN AND EXHAUST AIR DUCTWORK WITH SPRINKLER PIPING.
6. FINAL LOCATION OF MECHANICAL EQUIPMENT, SUPPLY AIR, RETURN AIR AND GRILLES MAY VARY SLIGHTLY PER LIVING UNIT. UNIT TYPICALS INDICATE TYPICAL CONFIGURATION OF SUCH SYSTEMS.
7. REFRIGERANT PIPING FROM ASSOCIATED OUTDOOR UNIT SHALL BE INSTALLED IN ACCORDANCE WITH MANUFACTURER'S REQUIREMENTS AND ROUTING SHALL BE FIELD COORDINATED.
8. THERMOSTATS SHALL BE INSTALLED AT 48" ABOVE FINISHED FLOOR. FINAL LOCATION OF THERMOSTAT SHALL BE COORDINATED WITH G.C. TO ALIGN WITH AND BE EVENLY SPACED WITH LIGHT SWITCHES AND OTHER WALL DEVICES.
9. MC SHALL COORDINATE WITH ALL TRADES TO ENSURE THAT SPACES UTILIZED AS MECHANICAL PLENUM RETURNS SHALL FEATURE PLENUM RATED MATERIALS AND EQUIPMENT. THIS SHALL INCLUDE, BUT NOT BE LIMITED TO, PLENUM RATED ELECTRICAL WIRING AND PLUGS, CONDENSATE DRAIN LINES, MECHANICAL DEVICES AND ACCESSORIES, PIPING AND CONDUIT.
10. CONDENSATE PUMPS CAPABLE OF NO LESS THAN 15 FEET OF VERTICAL RISE SHALL BE PROVIDED FOR HORIZONTAL INDOOR NONDUCTED WALL MOUNTED AIR HANDLING UNITS AND MAIN BRANCH CONTROLLERS. CONDENSATE PUMPS SHALL BE POWERED THROUGH ASSOCIATED COOLING EQUIPMENT AND MC SHALL PROVIDE TRANSFORMER AS REQUIRED FOR POWER. COORDINATE REFRIGERANT AND CONDENSATE PIPING WITH ARCHITECTURAL, STRUCTURAL, MECHANICAL, ELECTRICAL, AND PLUMBING SYSTEMS IN FIELD. SPECIAL CARE SHALL BE CONSIDERED FOR ROUTING OF PIPING WITHIN ELECTRICAL ROOMS AND AT LOCATIONS IN WHICH ELECTRICAL EQUIPMENT IS INSTALLED. PIPING SHALL BE ROUTED SUCH THAT IS NOT LOCATED WITHIN THE WORKING CLEARANCE REQUIREMENTS AS DICTATED BY THE NATIONAL ELECTRIC CODE.

MECHANICAL KEY NOTES: 1

1. EXISTING CHILLER AND ALL ASSOCIATED CONTROLS, APPURTENANCES AND PIPING TO REMAIN. MC SHALL VERIFY EXACT LOCATION AND SIZE IN FIELD.
2. EXISTING CONDENSER WATER PUMPS AND ALL ASSOCIATED CONTROLS, APPURTENANCES AND PIPING TO REMAIN. MC SHALL VERIFY EXACT LOCATION AND SIZE IN FIELD.
3. 72"X26" RA DUCTWORK UP TO FLOOR ABOVE. PROVIDE HORIZONTAL FIRE DAMPER AT FLOOR PENETRATION. COORDINATE FINAL LOCATION WITH EXISTING STRUCTURAL SYSTEM AND EXISTING MEP SYSTEMS IN BASEMENT.
4. 3" CHILLED WATER SUPPLY AND RETURN PIPING SHALL CONNECT TO EXISTING CHILLED WATER SUPPLY AND RETURN PIPING AND SHALL ROUTED UP TO FLOOR ABOVE. COORDINATE EXACT ROUTING OF NEW PIPING AND VERIFY EXISTING PIPING LOCATION IN FIELD. MC SHALL PROVIDE 1" DRAIN DOWN PORT AND BALL VALVE DOWNSTREAM OF NEW GATE VALVES FOR WINTERIZATION OF FEED TO RTU-1. PROVIDE 1" PIPING TO NEAREST FLOOR DRAIN IN MECHANICAL ROOM.
5. RETURN AIR DUCTWORK SHALL BE INSTALLED ABOVE 1 HOUR RATED CEILING. DUCTWORK SHALL NOT COMMUNICATE ADJACENT SPACES WITH EGRESS CORRIDOR. NO NEW SCOPE OF WORK SHALL BE CONDUCTED FOR EXISTING SYSTEM SERVICE OFFICE SPACE WITHIN BOUNDED REGION.
6. RETURN AIR DUCTWORK SHALL STUB INTO SPACE FOR FUTURE CONNECTION BY RETAIL TENANT UNDER SEPARATE CONTRACT.
7. EXISTING LOW PRESSURE STEAM SUPPLY PIPING AND CONDENSATE RETURN PIPING TO REMAIN. VERIFY EXACT SIZE, ROUTING AND LOCATION IN FIELD.
8. 40"X20" SA DUCTWORK UP TO FLOOR ABOVE. PROVIDE HORIZONTAL FIRE DAMPER AT FLOOR PENETRATION. COORDINATE FINAL LOCATION WITH EXISTING STRUCTURAL SYSTEM AND EXISTING MEP SYSTEMS IN BASEMENT.
9. SUPPLY AIR DUCTWORK SHALL STUB INTO SPACE FOR FUTURE CONNECTION BY RETAIL TENANT UNDER SEPARATE CONTRACT.
10. EXISTING STEAM CONDENSATE RETURN PIPING UP TO FLOOR ABOVE TO REMAIN. VERIFY EXACT LOCATION AND ROUTING OF PIPING IN FIELD.
11. EXISTING LOW PRESSURE STEAM SUPPLY PIPING UP TO FLOOR ABOVE TO REMAIN. VERIFY EXACT LOCATION AND ROUTING OF PIPING IN FIELD.

8/24/2025 4:52:45 PM

VILLAGE OF OAK PARK
CONSTRUCTION DOCUMENT(S)
REVIEWED FOR COMPLIANCE
KEEP A PRINTED APPROVED COPY OF THE PLANS ON SITE AT ALL TIMES FOR CONTRACTORS AND INSPECTORS

625 W Adams Street – 19th Floor
Chicago, IL 60661
312.320.3668

LICENSED PROFESSIONAL ENGINEER
ALEXANDER G. RADKOFF
062-073334
OF ILLINOIS

DESIGN FIRM LIC. NO: 184008703-002
DESIGN FIRM LIC. NO. EXP.: 04.30.2027
ILLINOIS LICENCE NUMBER: 062.073334
LIC. EXP.: 11.30. 2025

1144 Lake Street, LLC

BASE BUILDING MECHANICAL RENOVATIONS

1144 W LAKE ST
OAK PARK, IL 60301

NO.	DESCRIPTION	DATE
1	PERMIT REVISION 1	09/19/2025
1	ISSUED FOR PERMIT	08/26/2025

JOB NO.: 25.068

SCALE: AS SHOWN

TITLE: BASEMENT FLOOR MECHANICAL PLAN

SHEET: M2.1

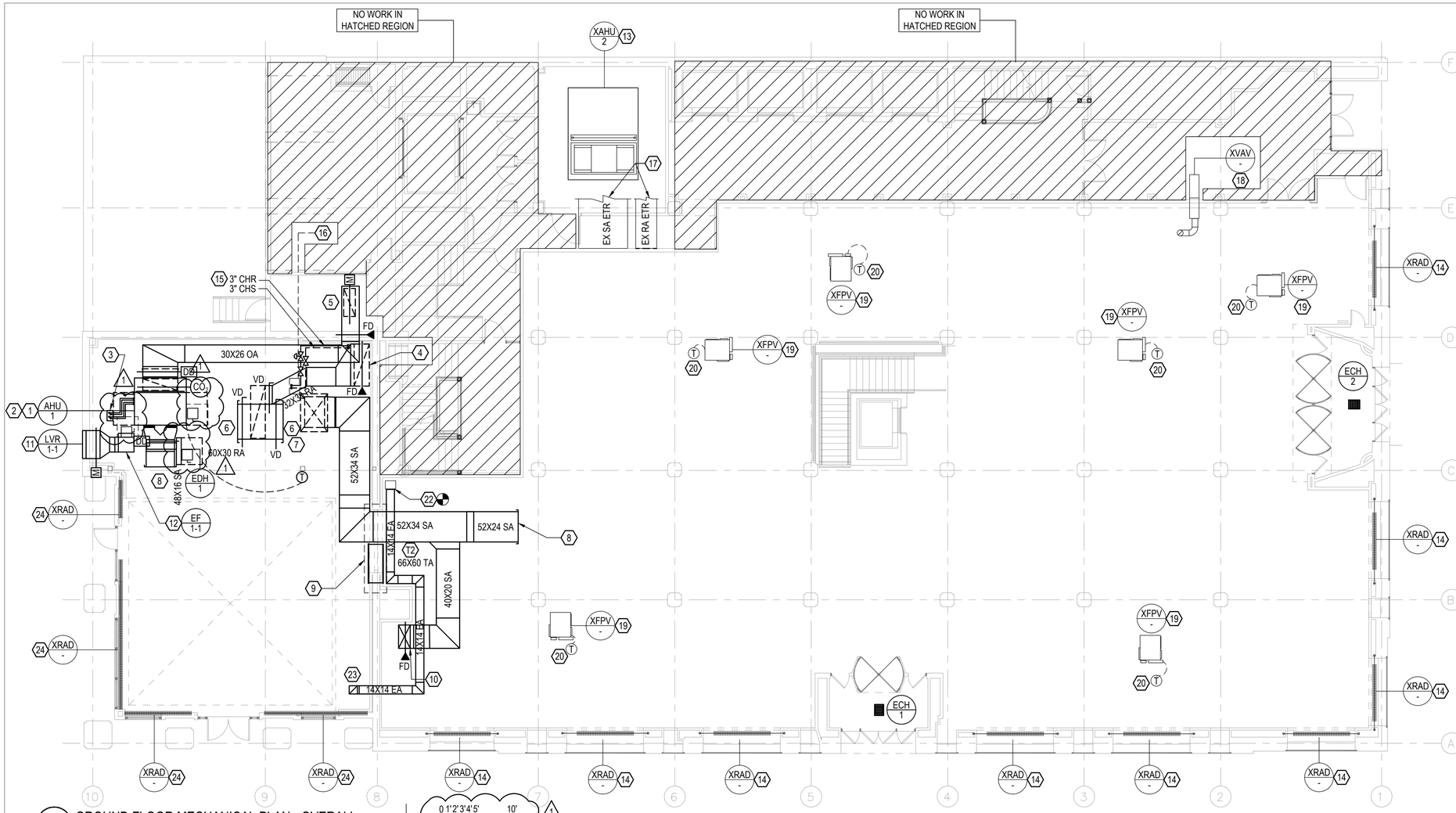

1 GROUND FLOOR MECHANICAL PLAN - OVERALL
M2.2 1/8" = 1'-0"

N

0 1' 2' 3' 4' 5' 10'
SCALE: 1/8" = 1'-0"

INSTALLED HUNG FROM STRUCTURE VIA VIBRATION ISOLATION HANGERS.

13. EXISTING AIR HANDLING UNIT AHU-2 AND ALL ASSOCIATED APPURTENANCES TO REMAIN. MC SHALL RE-BALANCE AHU-2 FAN MOTOR AND SHALL REPLACE FAN MOTOR, BELT, AND SHEAVE AS NECESSARY TO MATCH 2ND FLOOR AND REMAINING GROUND FLOOR VAV BOX EQUIPMENT SERVED BY AIR HANDLER. EXISTING CHILLED WATER COIL TO REMAIN. ASSOCIATED TWO WAY CONTROL VALVE SHALL BE RE-BALANCED TO RESTRICT FLOW THROUGH CHILLED WATER COIL. FINAL FLOW SETTING SHALL BE DETERMINED AS PART OF EOR'S EVALUATION OF AHU-2 TAB REPORT.

14. EXISTING STEAM FIN TUBE RADIATOR, RADIATOR VALVE, CONTROLS AND APPURTENANCES TO REMAIN. VERIFY SIZE AND LOCATION IN FIELD. STEAM SUPPLY PIPING AND STEAM CONDENSATE PIPING DOWN TO FLOOR BELOW TO REMAIN.

15. 3" CHILLED WATER SUPPLY AND RETURN PIPING SHALL BE ROUTED DOWN TO FLOOR BELOW. COORDINATE ROUTING IN FIELD WITH EXISTING STRUCTURAL SYSTEM.

16. 3" CHILLED WATER SUPPLY AND RETURN PIPING UP TO CHILLED WATER SECTION AT ROOFTOP UNIT ABOVE. COORDINATE ROUTING WITH EXACT ROOFTOP UNIT LOCATION AND CHILLED WATER SECTION LOCATION.

17. EXISTING DUCTWORK CONTINUES OUT OF PROJECT SCOPE WITHIN MECHANICAL ROOM.

19. EXISTING SINGLE DUCT VARIABLE AIR VOLUME BOX WITH ELECTRIC RESISTANCE REHEAT COIL AND ALL ASSOCIATED APPURTENANCES TO REMAIN. VERIFY EXACT LOCATION AND ORIENTATION OF UNIT IN FIELD.

20. EXISTING PARALLEL FAN POWERED BOX WITH ELECTRIC RESISTANCE REHEAT COIL AND ALL ASSOCIATED APPURTENANCES TO REMAIN. EXISTING FPV SHALL BE UTILIZED FOR TEMPORARY HEAT WITHIN THE SPACE DURING CORE AND SHELL PHASE. MC SHALL LOCKOUT HIGH STAGES OF HEATING SUCH THAT ELECTRIC HEATER IS COMPATIBLE WITH FAN POWERED AIRFLOW ONLY. MC SHALL VERIFY FPV FEATURES AIRFLOW SWITCH, HIGH LIMIT TEMPERATURE SENSOR AND CUTOFF DEVICE. VERIFY EXACT LOCATION AND ORIENTATION OF UNIT IN FIELD.

21. EXISTING THERMOSTAT SERVING FAN POWERED BOX AND ALL ASSOCIATED CONTROL WIRING SHALL BE RELOCATED AND PLACED ON TOP OF ASSOCIATED FAN POWERED BOX VERIFY EXACT LOCATION OF THERMOSTAT IN FIELD.

22. 14"X14" EXHAUST DUCTWORK CONNECTS TO EXISTING EXHAUST DUCTWORK AT THIS LOCATION. MC SHALL MAKE TRANSITIONS REQUIRED TO MAKE CONNECTION. VERIFY SIZE AND LOCATION OF EXISTING DUCT IN FIELD.

23. 14"X14" EXHAUST DUCTWORK UP TO GRV-2 AT ROOF LEVEL ABOVE. MC SHALL COORDINATE ROUTING AND FINAL LOCATION WITH EXISTING STRUCTURAL SYSTEM IN FIELD.

24. EXISTING ELECTRIC RADIATOR, CONTROLS, POWER AND APPURTENANCES TO REMAIN.

MECHANICAL GENERAL NOTES:

1. FIRE STOP ALL FIRE RATED FLOORS, CEILINGS, AND WALLS AS REQUIRED BY CODE. PENETRATIONS INTO OR THROUGH FIRE RESISTANCE RATED WALLS SHALL COMPLY WITH IBC CHAPTER 7.

2. MC SHALL VERIFY THAT EXHAUST AIR TERMINATIONS CONVEYING ENVIRONMENTAL EXHAUST SHALL BE LOCATED A MINIMUM OF 10 FEET FROM ALL OUTSIDE FRESH AIR INTAKES AND A MINIMUM OF 3 FEET FROM OPERABLE OPENINGS.

3. ALL MECHANICAL EQUIPMENT, SENSORS AND DAMPERS LOCATED ABOVE CEILINGS OR WITHIN WALLS SHALL BE PROVIDED WITH ACCESS PANELS SIZED IN ACCORDANCE WITH MANUFACTURER;S INSTALLATION REQUIREMENTS AND SUCH THAT THE FULL REMOVAL OF THE EQUIPMENT AND/OR DAMPER IS POSSIBLE. PROVIDE RATED ACCESS PANELS FOR ALL ACCESS PANELS LOCATED WITHIN RATED CEILINGS OR WALLS. ACCESS PANELS SHALL BE TAMPER AND VANDAL PROOF.

4. CONDENSATE DRAIN PIPING SHALL BE SLOPED NO LESS THAN 1/4" PER LINEAL FOOT OF HORIZONTAL RUN. PIPING SHALL BE SLOPED TOWARDS POINT OF TERMINATION.

5. MC SHALL COORDINATE SUPPLY, RETURN AND EXHAUST AIR DUCTWORK WITH SPRINKLER PIPING.

6. REFRIGERANT PIPING FROM ASSOCIATED OUTDOOR UNIT SHALL BE INSTALLED IN ACCORDANCE WITH MANUFACTURER'S REQUIREMENTS AND ROUTING SHALL BE FIELD COORDINATED.

7. THERMOSTATS SHALL BE INSTALLED AT 48" ABOVE FINISHED FLOOR. FINAL LOCATION OF THERMOSTAT SHALL BE COORDINATED WITH G.C. TO ALIGN WITH AND BE EVENLY SPACED WITH LIGHT SWITCHES AND OTHER WALL DEVICES.

8. MC SHALL COORDINATE WITH ALL TRADES TO ENSURE THAT SPACES UTILIZED AS MECHANICAL PLENUM RETURNS SHALL FEATURE PLENUM RATED MATERIALS AND EQUIPMENT. THIS SHALL INCLUDE, BUT NOT BE LIMITED TO, PLENUM RATED ELECTRICAL WIRING AND PLUGS, CONDENSATE DRAIN LINES, MECHANICAL DEVICES AND ACCESSORIES, PIPING AND CONDUIT.

9. CONDENSATE PUMPS CAPABLE OF NO LESS THAN 15 FEET OF VERTICAL RISE SHALL BE PROVIDED FOR HORIZONTAL INDOOR DUCTED AIR HANDLING UNITS AND MAIN BRANCH CONTROLLERS. CONDENSATE PUMPS SHALL BE POWERED THROUGH ASSOCIATED COOLING EQUIPMENT AND MC SHALL PROVIDE TRANSFORMER AS REQUIRED FOR POWER. COORDINATE REFRIGERANT AND CONDENSATE PIPING WITH ARCHITECTURAL, STRUCTURAL, MECHANICAL, ELECTRICAL, AND PLUMBING SYSTEMS IN FIELD. SPECIAL CARE SHALL BE CONSIDERED FOR ROUTING OF PIPING WITHIN ELECTRICAL ROOMS AND AT LOCATIONS IN WHICH ELECTRICAL EQUIPMENT IS INSTALLED. PIPING SHALL BE ROUTED SUCH THAT IS NOT LOCATED WITHIN THE WORKING CLEARANCE REQUIREMENTS AS DICTATED BY THE NATIONAL ELECTRIC CODE.

10. MECHANICAL EQUIPMENT SHALL BE INSTALLED IN ACCORDANCE WITH THE MANUFACTURER'S INSTALLATION, CLEARANCE, ACCESS AND MAINTENANCE REQUIREMENTS.

11. DUCT AND ROOF CURBS SHALL BE INSULATED AND TO MATCH THE ROOF SLOPE. SEE ARCHITECTURAL DRAWINGS FOR ROOF SLOPE ASSOCIATED WITH EACH ROOF AND DUCT CURB.

12. ALL MECHANICAL EQUIPMENT, ACCESSORIES, DEVICES AND APPURTENANCES REQUIRING SERVICE SHALL BE INSTALLED AND COORDINATED WITH ALL TRADES SUCH THAT MANUFACTURER'S RECOMMENDED INSTALLATION SERVICE AND CLEARANCE REQUIREMENTS ARE MAINTAINED.

13. MC SHALL VERIFY ALL EXISTING STRUCTURAL SYSTEM ROUTING, DEPTH, SPAN THROUGHOUT BUILDING. MC SHALL COORDINATE DUCT ROUTING AND FINAL LOCATIONS OF DUCTWORK AND GRILLES, REGISTERS AND DIFFUSERS WITH EXISTING STRUCTURAL SYSTEM.

14. MC SHALL COORDINATE WITH GC TO PATCH ALL EXISTING TO REMAIN WALL, FLOOR AND CEILING PENETRATIONS TO MATCH EXISTING MATERIAL AT ALL DEMOLISHED PIPE, DUCT, AND MECHANICAL SYSTEMS RELATED PENETRATIONS.

15. MC SHALL COORDINATE WITH GC TO VERIFY FINAL LINTEL SIZE REQUIREMENTS FOR STRUCTURAL PENETRATIONS REQUIRING LINTELS. FINAL LINTEL SIZE SHALL BE VERIFIED TO MATCH DIMENSIONS OF MECHANICAL CONTRACTOR'S APPROVED DUCT SHOP DRAWINGS.

16. MC SHALL VERIFY EXISTING CONDITIONS AND LOCATIONS OF EQUIPMENT, DUCTWORK, PIPING AND GRILLES, REGISTERS, AND DIFFUSERS IN FIELD PRIOR TO BID. MC SHALL VERIFY EQUIPMENT IS IN GOOD WORKING ORDER AND THAT ANY COMPONENTS OF EQUIPMENT THAT REQUIRE REPLACEMENT ARE REPLACED PRIOR TO REINSTALLATION. GRILLES, REGISTERS AND DIFFUSERS IDENTIFIED TO BE EXISTING TO REMAIN SHALL BE CLEANED OF DUST AND DEBRIS PRIOR TO FINAL RE-INSTALLATION AND EQUIPMENT STARTUP.

MECHANICAL KEY NOTES: (X)

1. MULTIPOISE AIR HANDLING UNIT SHALL BE INSTALLED HUNG FROM HORIZONTAL SUSPENSION KIT WITH SPRING VIBRATION ISOLATORS. INSTALL PER THE MANUFACTURER'S INSTALLATION AND CLEARANCE REQUIREMENTS.

2. (1) 1" CONDENSATE DRAIN PIPING SHALL BE ROUTED TO AND TERMINATE INDIRECTLY AT NEAREST FLOOR DRAIN OR MOP SINK AT BASEMENT FLOOR. PROVIDE UL-508 RATED DRAIN PAN LEVEL SENSOR CUTOFF DEVICE AT SECONDARY DRAIN PAN BENEATH UNIT. (2) REFRIGERANT PIPING LINESETS SHALL BE ROUTED FORM AIR HANDLING UNIT TO ASSOCIATED OUTDOOR CONDENSING UNIT. COORDINATE ROUTING OF ALL PIPING IN FIELD.

3. REFRIGERANT PIPING LINESETS SHALL BE ROUTED UP THROUGH ROOF VIA 14" INSULATED PIPE PORTAL.

4. 72" X 26" RA SHALL BE ROUTED DN THROUGH FLOOR TO FLOOR BELOW. PROVIDE HORIZONTAL FIRE DAMPER AT FLOOR PENETRATION. COORDINATE FINAL LOCATION WITH STRUCTURAL DRAWINGS TO COORDINATE WITH STRUCTURAL OPENINGS.

5. OUTSIDE AIR DUCTWORK SHALL BE ROUTED WITHIN RATED SOFFIT/CEILING OUTSIDE OF RATED EGRESS HORIZONTAL EXIT UP TO GRV-1 AT LOW ROOF ABOVE. TRANSITION DUCTWORK TO GRV INLET OPENING AS REQUIRED.

6. RETURN AIR DUCTWORK SHALL BE ROUTED UP TO RTU-1 ABOVE. DUCTWORK SHALL TRANSITION AS REQUIRED TO COORDINATE WITH STRUCTURAL OPENINGS. SEE STRUCTURAL DRAWINGS FOR FINAL STRUCTURAL FRAMING.

7. SUPPLY AIR DUCTWORK SHALL TRANSITION AS NECESSARY FROM 52" X 34" WITHIN ROOF CURB TO SUPPLY AIR OPENING AT RTU-1 AND SHALL BE ROUTED . DUCTWORK SHALL TRANSITION AS REQUIRED TO COORDINATE WITH STRUCTURAL OPENINGS. SEE STRUCTURAL DRAWINGS FOR FINAL STRUCTURAL FRAMING.

8. SUPPLY DUCTWORK SHALL BE STUBBED OPEN INTO SPACE. PROVIDE BIRDSCREEN AT DUCT OPENING.

9. 66" X 60" TRANSFER AIR WITH (2) PRICE 530D SINGLE DEFLECTION GRILLES SHALL BE INSTALLED ABOVE DOOR FRAME OPENING. COORDINATE FINAL DIMENSIONS OF DUCTWORK AND ASSOCIATED GRILLES IN FIELD WITH EXISTING CONDITIONS.

10. 40" X 20" SA SHALL BE ROUTED DN THROUGH FLOOR TO FLOOR BELOW. PROVIDE HORIZONTAL FIRE DAMPER AT FLOOR PENETRATION. COORDINATE FINAL LOCATION WITH STRUCTURAL DRAWINGS TO COORDINATE WITH STRUCTURAL OPENINGS.

11. 48"X30" EXHAUST AIR LOUVER SHALL BE INSTALLED AT EXTERIOR WALL. PROVIDE 120V MOTORIZED CONTROL DAMPER AND BIRDSCREEN AT INSIDE FACE OF LOUVER.

12. INLINE EXHAUST/RELIEF FAN WITH VFD SHALL BE

VILLAGE OF OAK PARK
CONSTRUCTION DOCUMENT(S)
REVIEWED FOR COMPLIANCE
KEEP A PRINTED APPROVED COPY OF THE PLANS ON SITE AT ALL TIMES FOR CONTRACTORS AND INSPECTORS

625 W Adams Street – 19th Floor
Chicago, IL 60661
312.320.3668

LICENSED PROFESSIONAL ENGINEER
ALEXANDER G. RADKOFF
062-073334
OF ILLINOIS

DESIGN FIRM LIC. NO: 184008703-002
DESIGN FIRM LIC. NO. EXP.: 04.30.2027
ILLINOIS LICENCE NUMBER: 062.073334
LIC. EXP.: 11.30. 2025

1144 Lake Street, LLC

BASE BUILDING MECHANICAL RENOVATIONS

1144 W LAKE ST
OAK PARK, IL 60301

NO.	DESCRIPTION	DATE
1	PERMIT REVISION 1	09/19/2025
1	ISSUED FOR PERMIT	08/26/2025

JOB NO.: 25.068

SCALE: AS SHOWN

TITLE GROUND FLOOR MECHANICAL PLAN

SHEET: M2.2

8/24/2025 4:52:45 PM

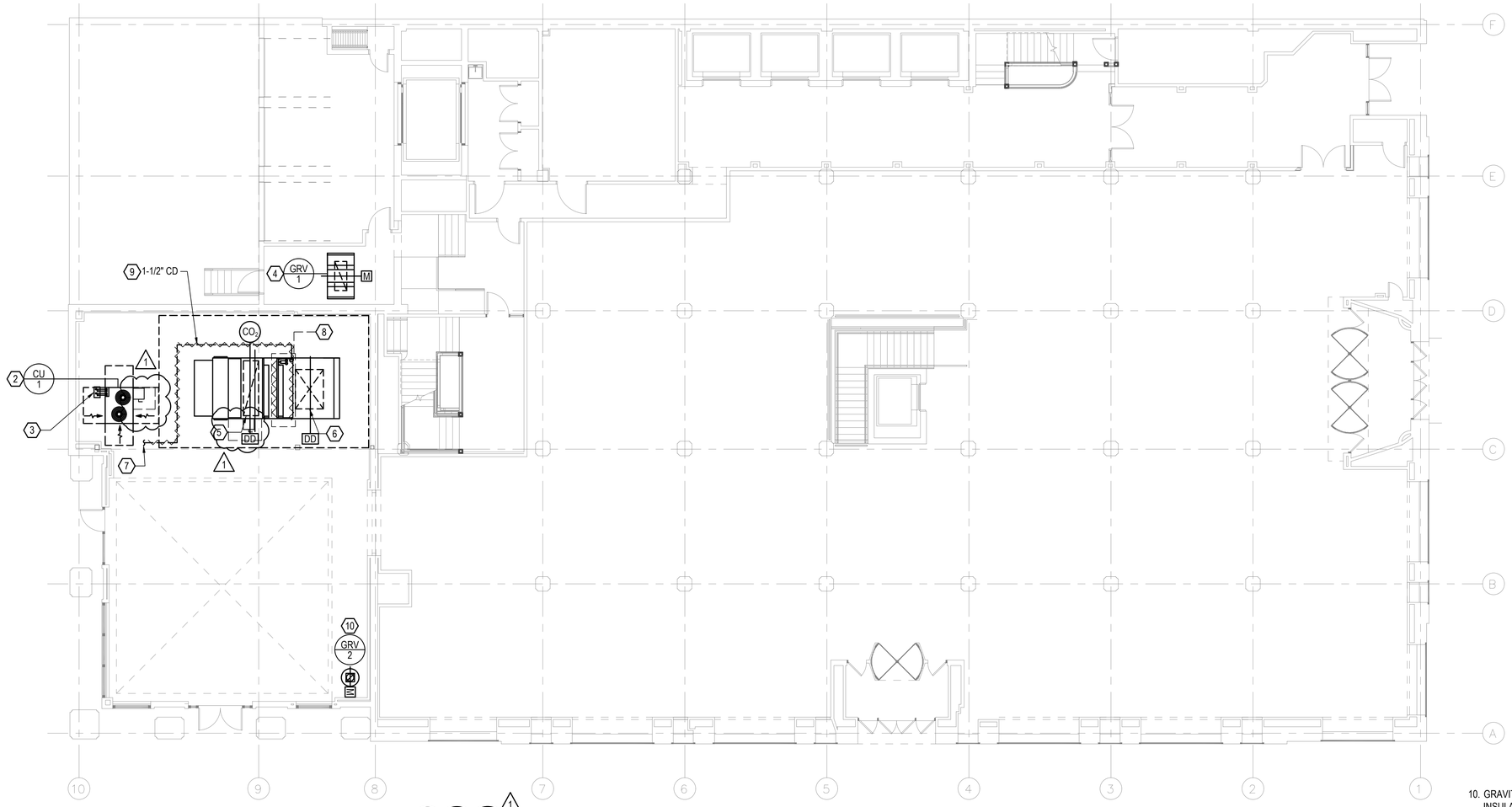

1 M2.3 LOW ROOF MECHANICAL PLAN - OVERALL
1/8" = 1'-0"

N

0 1'2' 3' 4' 5' 10'
SCALE: 1/8" = 1'-0"

10. GRAVITY RELIEF VENTILATOR SHALL BE INSTALLED ON 14" INSULATED CANTED ROOF CURB WITH SLOPE MATCHING ASSOCIATED ROOF PITCH. EXHAUST AIR DUCTWORK SHALL BE ROUTED DOWN TO FLOOR BELOW.

MECHANICAL GENERAL NOTES:

1. FIRE STOP ALL FIRE RATED FLOORS, CEILINGS, AND WALLS AS REQUIRED BY CODE. PENETRATIONS INTO OR THROUGH FIRE RESISTANCE RATED WALLS SHALL COMPLY WITH IBC CHAPTER 7.
2. MC SHALL VERIFY THAT EXHAUST AIR TERMINATIONS CONVEYING ENVIRONMENTAL EXHAUST SHALL BE LOCATED A MINIMUM OF 10 FEET FROM ALL OUTSIDE FRESH AIR INTAKES AND A MINIMUM OF 3 FEET FROM OPERABLE OPENINGS.
3. ALL MECHANICAL EQUIPMENT, SENSORS AND DAMPERS LOCATED ABOVE CEILINGS OR WITHIN WALLS SHALL BE PROVIDED WITH ACCESS PANELS SIZED IN ACCORDANCE WITH MANUFACTURER;S INSTALLATION REQUIREMENTS AND SUCH THAT THE FULL REMOVAL OF THE EQUIPMENT AND/OR DAMPER IS POSSIBLE. PROVIDE RATED ACCESS PANELS FOR ALL ACCESS PANELS LOCATED WITHIN RATED CEILINGS OR WALLS. ACCESS PANELS SHALL BE TAMPER AND VANDAL PROOF.
4. CONDENSATE DRAIN PIPING SHALL BE SLOPED NO LESS THAN 1/4" PER LINEAL FOOT OF HORIZONTAL RUN. PIPING SHALL BE SLOPED TOWARDS POINT OF TERMINATION.
5. MC SHALL COORDINATE SUPPLY, RETURN AND EXHAUST AIR DUCTWORK WITH SPRINKLER PIPING.
6. REFRIGERANT PIPING FROM ASSOCIATED OUTDOOR UNIT SHALL BE INSTALLED IN ACCORDANCE WITH MANUFACTURER'S REQUIREMENTS AND ROUTING SHALL BE FIELD COORDINATED.
7. THERMOSTATS SHALL BE INSTALLED AT 48" ABOVE FINISHED FLOOR. FINAL LOCATION OF THERMOSTAT SHALL BE COORDINATED WITH G.C. TO ALIGN WITH AND BE EVENLY SPACED WITH LIGHT SWITCHES AND OTHER WALL DEVICES.
8. MC SHALL COORDINATE WITH ALL TRADES TO ENSURE THAT SPACES UTILIZED AS MECHANICAL PLENUM RETURNS SHALL FEATURE PLENUM RATED MATERIALS AND EQUIPMENT. THIS SHALL INCLUDE, BUT NOT BE LIMITED TO, PLENUM RATED ELECTRICAL WIRING AND PLUGS, CONDENSATE DRAIN LINES, MECHANICAL DEVICES AND ACCESSORIES, PIPING AND CONDUIT.
9. CONDENSATE PUMPS CAPABLE OF NO LESS THAN 15 FEET OF VERTICAL RISE SHALL BE PROVIDED FOR HORIZONTAL INDOOR DUCTED AIR HANDLING UNITS AND MAIN BRANCH CONTROLLERS. CONDENSATE PUMPS SHALL BE POWERED THROUGH ASSOCIATED COOLING EQUIPMENT AND MC SHALL PROVIDE TRANSFORMER AS REQUIRED FOR POWER. COORDINATE REFRIGERANT AND CONDENSATE PIPING WITH ARCHITECTURAL, STRUCTURAL, MECHANICAL, ELECTRICAL, AND PLUMBING SYSTEMS IN FIELD. SPECIAL CARE SHALL BE CONSIDERED FOR ROUTING OF PIPING WITHIN ELECTRICAL ROOMS AND AT LOCATIONS IN WHICH ELECTRICAL EQUIPMENT IS INSTALLED. PIPING SHALL BE ROUTED SUCH THAT IS NOT LOCATED WITHIN THE WORKING CLEARANCE REQUIREMENTS AS DICTATED BY THE NATIONAL ELECTRIC CODE.
10. ALL MECHANICAL EQUIPMENT SHALL BE INSTALLED NO LESS THAN 10 FEET FROM ROOF EDGE OR PARAPET. NEW MECHANICAL EQUIPMENT INSTALLED WITHIN 10 FEET OF ROOF EDGE SHALL BE PROVIDED WITH SERVICE AND MAINTENANCE RAILING IN ACCORDANCE WITH THE OHIO MECHANICAL CODE AND OSHA REQUIREMENTS. EXISTING ROOF PARAPETS EXTENDING NO LESS THAN 42" ABOVE ROOF LEVEL SHALL SERVES AS A MEANS OF FALL PROTECTION.
11. MECHANICAL EQUIPMENT SHALL BE INSTALLED IN ACCORDANCE WITH THE MANUFACTURER'S INSTALLATION, CLEARANCE, ACCESS AND MAINTENANCE REQUIREMENTS.
12. DUCT AND ROOF CURBS SHALL BE INSULATED AND TO MATCH THE ROOF SLOPE. SEE ARCHITECTURAL DRAWINGS FOR ROOF SLOPE ASSOCIATED WITH EACH ROOF AND DUCT CURB.
13. ALL MECHANICAL EQUIPMENT, ACCESSORIES, DEVICES AND APPURTENANCES REQUIRING SERVICE SHALL BE INSTALLED AND COORDINATED WITH ALL TRADES SUCH THAT MANUFACTURER'S RECOMMENDED INSTALLATION SERVICE AND CLEARANCE REQUIREMENTS ARE MAINTAINED.
14. MC SHALL VERIFY ALL EXISTING STRUCTURAL SYSTEM ROUTING, DEPTH, SPAN THROUGHOUT BUILDING. MC SHALL COORDINATE DUCT ROUTING AND FINAL LOCATIONS OF DUCTWORK AND GRILLES, REGISTERS AND DIFFUSERS WITH EXISTING STRUCTURAL SYSTEM.
15. MC SHALL COORDINATE WITH GC TO PATCH ALL EXISTING TO REMAIN WALL, FLOOR AND CEILING PENETRATIONS TO MATCH EXISTING MATERIAL AT ALL DEMOLISHED PIPE, DUCT, AND MECHANICAL SYSTEMS RELATED PENETRATIONS.
16. MC SHALL COORDINATE WITH GC TO VERIFY FINAL LINTEL SIZE REQUIREMENTS FOR STRUCTURAL PENETRATIONS REQUIRING LINTELS. FINAL LINTEL SIZE SHALL BE VERIFIED TO MATCH DIMENSIONS OF MECHANICAL CONTRACTOR'S APPROVED DUCT SHOP DRAWINGS.
17. MC SHALL VERIFY EXISTING CONDITIONS AND LOCATIONS OF EQUIPMENT, DUCTWORK, PIPING AND GRILLES, REGISTERS, AND DIFFUSERS IN FIELD PRIOR TO BID. MC SHALL VERIFY EQUIPMENT IS IN GOOD WORKING ORDER AND THAT ANY COMPONENTS OF EQUIPMENT THAT REQUIRE REPLACEMENT ARE REPLACED PRIOR TO REINSTALLATION. GRILLES, REGISTERS AND DIFFUSERS IDENTIFIED TO BE EXISTING TO REMAIN SHALL BE CLEANED OF DUST AND DEBRIS PRIOR TO FINAL RE-INSTALLATION AND EQUIPMENT STARTUP.

MECHANICAL KEY NOTES: 1

1. ROOFTOP UNIT SHALL BE INSTALLED ON 24" HIGH INSULATED ROOF CURB WITH SPRING VIBRATION ISOLATION RAIL. BASIS OF DESIGN RAIL SHALL BE KINETICS KSR-3.0 RAIL OR APPROVED EQUAL. INSTALL PER THE MANUFACTURER'S INSTALLATION REQUIREMENTS FOR CLEARANCE, SERVICE AND ACCESS.
2. CONDENSING UNIT SHALL BE INSTALLED ON 24" HIGH ROOF EQUIPMENT SUPPORT CURB WITH SPRING VIBRATION ISOLATION RAILS. INSTALL PER THE MANUFACTURER'S INSTALLATION REQUIREMENTS FOR CLEARANCE, SERVICE AND ACCESS.
3. REFRIGERANT PIPING LINESETS SHALL BE ROUTED DN THROUGH ROOF VIA 14" INSULATED PIPE PORTAL.
4. GRAVITY INTAKE VENTILATOR SHALL BE INSTALLED ON 14" INSULATED CANTED ROOF CURB WITH SLOPE MATCHING ASSOCIATED ROOF PITCH. INTAKE AIR DUCTWORK SHALL BE ROUTED DOWN WITHIN RATED SOFFIT/CEILING OUTSIDE OF RATED EGRESS HORIZONTAL EXIT.
5. RETURN AIR DUCTWORK SHALL BE ROUTED DN TO CEILING OF FLOOR BELOW. DUCTWORK SHALL TRANSITION AS REQUIRED TO COORDINATE WITH STRUCTURAL OPENINGS. SEE STRUCTURAL DRAWINGS FOR FINAL STRUCTURAL FRAMING.
6. SUPPLY AIR DUCTWORK SHALL TRANSITION AS NECESSARY WITHIN ROOF CURB TO 52" X 34" AND SHALL BE ROUTED DN TO CEILING OF FLOOR BELOW. DUCTWORK SHALL TRANSITION AS REQUIRED TO COORDINATE WITH STRUCTURAL OPENINGS. SEE STRUCTURAL DRAWINGS FOR FINAL STRUCTURAL FRAMING.
7. 1-1/2" CONDENSATE DRAIN PIPING SHALL BE ROUTED TO AND SHALL TERMINATE INDIRECTLY AT EXITING ROOF DRAIN. MC SHALL COORDINATE ROUTING OF PIPING WITH EXACT ROOF DRAIN LOCATION IN FIELD.
8. ROOFTOP AIR HANDLING UNIT CHILLED WATER SECTION SHALL PROVIDED WITH HEAT TRACING OF 15W/ L.F AROUND INSIDE FACE OF CHILLED WATER SECTION. HEAT TRACING SHALL BE CHROMALOX SELF REGULATING HEAT TRACE WIRE OR APPROVED EQUAL ELECTRIC RESISTANCE HEAT TAPE AT 120V/1PH. POWER. CABINET SHALL BE PROVIDED WITH INTERNAL DOUBLE WALL INSULATION. MECHANICAL TRADE SHALL COORDINATE WITH ELECTRICAL TRADE TO PROVIDE CIRCUITING, WIRING, AND DISCONNECT PROTECTION AS REQUIRED FOR HEAT TRACING.
9. CONDENSATE PIPING FOR ROOFTOP AIR HANDLING UNIT SHALL PROVIDED WITH HEAT TRACING OF 10W/ L.F. OF EXPOSED PIPING. HEAT TRACING SHALL BE CHROMALOX SELF REGULATING HEAT TRACE WIRE OR APPROVED EQUAL ELECTRIC RESISTANCE HEAT TAPE AT 120V/1PH. POWER. MECHANICAL TRADE SHALL COORDINATE WITH ELECTRICAL TRADE TO PROVIDE CIRCUITING, WIRING, AND DISCONNECT PROTECTION AS REQUIRED FOR HEAT TRACING.

VILLAGE OF OAK PARK
CONSTRUCTION DOCUMENT(S)
REVIEWED FOR COMPLIANCE
KEEP A PRINTED APPROVED COPY OF THE PLANS ON SITE AT ALL TIMES FOR CONTRACTORS AND INSPECTORS

625 W Adams Street – 19th Floor
Chicago, IL 60661
312.320.3668

LICENSED PROFESSIONAL ENGINEER
ALEXANDER G. RADKOFF
062-073334
OF ILLINOIS

DESIGN FIRM LIC. NO: 184008703-002
DESIGN FIRM LIC. NO. EXP : 04.30.2027
ILLINOIS LICENCE NUMBER: 062.073334
LIC. EXP.: 11.30. 2025

1144 Lake Street, LLC

BASE BUILDING MECHANICAL RENOVATIONS

1144 W LAKE ST
OAK PARK, IL 60301

NO.	DESCRIPTION	DATE
1	PERMIT REVISION 1	09/19/2025
1	ISSUED FOR PERMIT	08/25/2025

JOB NO.: 25.068

SCALE: AS SHOWN

TITLE: LOW ROOF MECHANICAL PLAN

SHEET: M2.3

8/24/2025 4:52:45 PM

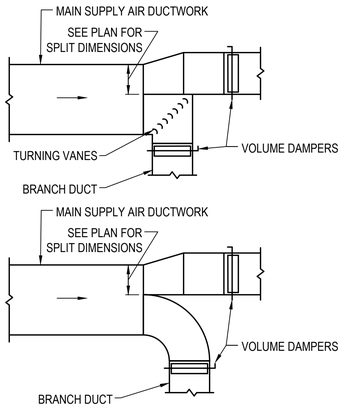

1 M4.1 TYPICAL LOW VELOCITY DUCT SPLITTER DETAILS
NOT TO SCALE

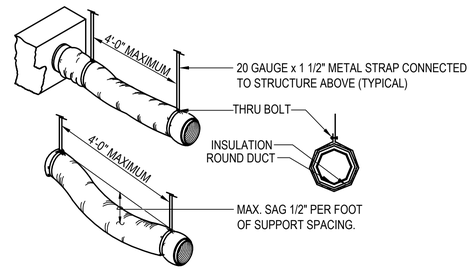

2 M4.1 FLEXIBLE DUCT RUN-OUT SUPPORT DETAIL
NOT TO SCALE

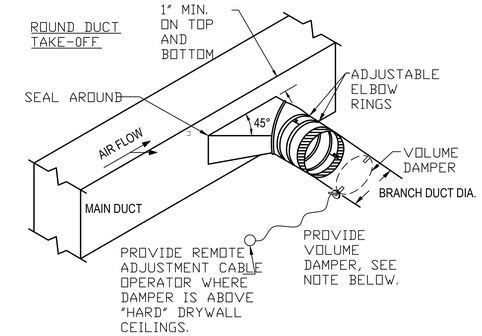

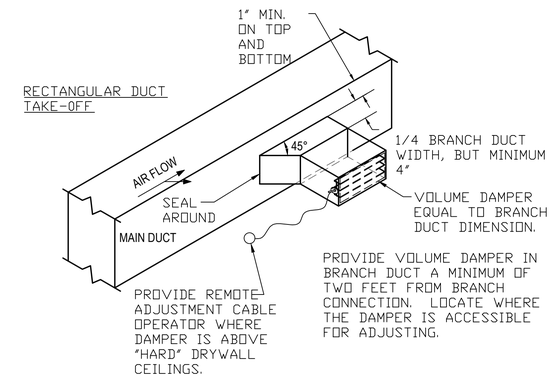

3 M4.1 TYPICAL LOW VELOCITY DUCT BRANCH DETAILS
NOT TO SCALE

NOTES:
1. FLEXIBLE DUCT SHOULD EXTEND STRAIGHT FOR SEVERAL INCHES FROM RECTANGULAR DUCT CONNECTION BEFORE BENDING.
2. DISTANCE BETWEEN SUPPORTS SHALL NOT EXCEED 4'-0". USE RIGID ROUND DUCTWORK WHEN RUNOUTS EXCEED SIZE AS FLEX DUCT. LENGTH NECESSARY TO MEET MAXIMUM FLEX DUCT LENGTH REQUIREMENTS

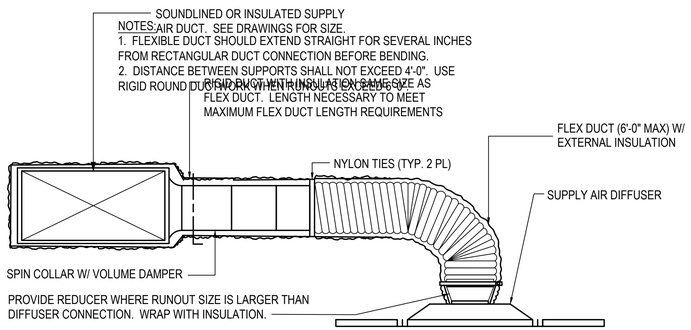

4 M4.1 SUPPLY AIR DIFFUSER CONNECTION DETAIL
NOT TO SCALE

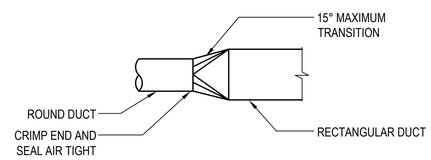

5 M4.1 ROUND TO RECTANGULAR DUCT TRANSITION
NOT TO SCALE

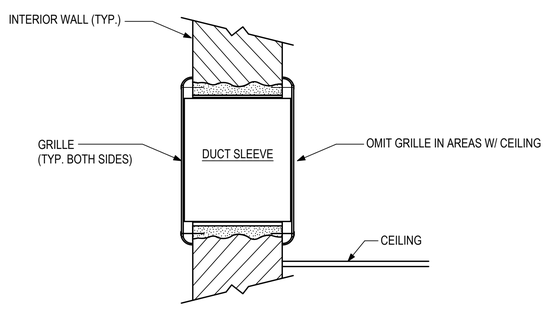

6 M4.1 RETURN AIR TRANSFER W/ GRILLES THRU NON-RATED WALL DETAIL
NOT TO SCALE

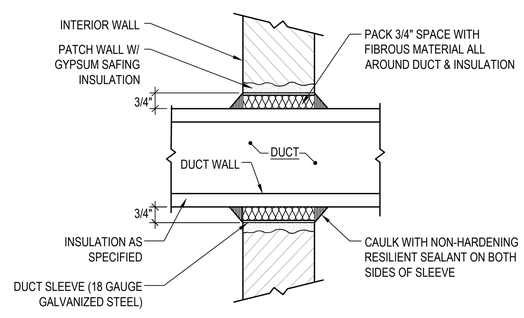

7 M4.1 INSULATED DUCT AND DUCT SLEEVE THRU NON-RATED WALL DETAIL
NOT TO SCALE

NOTES:
1. FOR INSTALLATION IN 2 HOUR RATED FIRE WALL CONSTRUCTION, SEE FIRE DAMPER DIAGRAM.
2. FOR INFORMATION ON DUCT SLEEVES THRU RATED WALLS AND FLOORS SEE SPECIFICATIONS SECTION 15055.
3. 3/4" MIN. SPACE IS REQUIRED BETWEEN SLEEVE & DUCT INSULATION IN AREA WHERE DUCT IS SPECIFIED TO BE INSULATED.
4. ONLY 1 HOUR RATED SMOKE PARTITIONS & 2 HOUR RATED FIRE WALLS ARE INDICATED ON HEATING DRAWINGS. FOR ADDITIONAL RATED WALLS SEE ARCHITECTURAL DRAWINGS.
5. CONTRACTOR TO EXTEND FLOOR SLEEVES IN EQUIPMENT ROOMS & OVER HABITABLE SPACES 2 INCHES ABOVE FINISHED FLOOR.

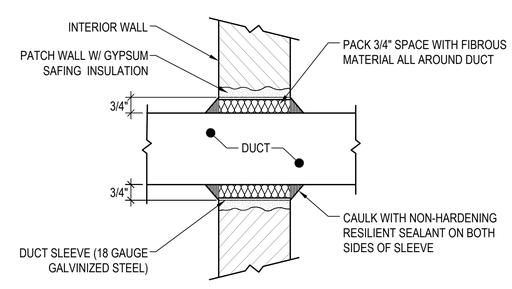

8 M4.1 UNINSULATED DUCT AND DUCT SLEEVE THRU NON-RATED WALL DETAIL
NOT TO SCALE

NOTES:
1. FOR INSTALLATION IN 2 HOUR RATED WALL CONSTRUCTION, SEE FIRE DAMPER DIAGRAM.
2. FOR INFORMATION ON DUCT SLEEVES THRU RATED WALLS & FLOORS SEE SPECIFICATIONS SECTION 15055.
3. ONLY 1 HOUR RATED SMOKE PARTITIONS & 2 HOUR RATED FIRE WALLS ARE INDICATED ON HEATING DRAWINGS. FOR ADDITIONAL RATED WALLS SEE ARCHITECTURAL DRAWINGS.
4. CONTRACTOR TO EXTEND FLOOR SLEEVES IN EQUIPMENT ROOMS & OVER HABITABLE SPACES 2 INCHES ABOVE FINISHED FLOOR.

VILLAGE OF OAK PARK
CONSTRUCTION DOCUMENT(S)
REVIEWED FOR COMPLIANCE
KEEP A PRINTED APPROVED COPY OF THE PLANS ON SITE AT ALL TIMES FOR CONTRACTORS AND INSPECTORS

625 W Adams Street – 19th Floor
Chicago, IL 60661
312.320.3668

LICENSED PROFESSIONAL ENGINEER
ALEXANDER G. RADKOFF
062-073334
OF ILLINOIS

DESIGN FIRM LIC. NO: 184008703-002
DESIGN FIRM LIC. NO. EXP : 04.30.2027
ILLINOIS LICENCE NUMBER: 062.073334
LIC. EXP.: 11.30. 2025

1144 Lake Street, LLC

BASE BUILDING MECHANICAL RENOVATIONS

1144 W LAKE ST
OAK PARK, IL 60301

NO.	DESCRIPTION	DATE
1	PERMIT REVISION 1	09/19/2025
1	ISSUED FOR PERMIT	08/25/2025

JOB NO.: 25.068

SCALE: DIAMETER

TITLE: MECHANICAL DETAILS

SHEET: M3.1

8/24/2025 4:52:45 PM

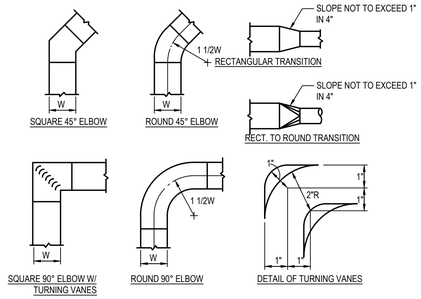

1 M3.2 LOW VELOCITY DUCTWORK DIAGRAMS
NO SCALE

NOTE:
PROVIDE RADIUS ELBOWS, 18" AND LARGER WITH TURNING BLADES AT 1/3 AND 1/2 THE WIDTH OF THE DUCT FROM THE INSIDE RADIUS. TURNING BLADES SHALL BE PROVIDED WITH HEMMED ENDS. (SEE SECTION 15840 OF MECHANICAL SPECIFICATIONS FOR ADDITIONAL DUCT CONSTRUCTION INFORMATION AND RESTRICTIONS.)

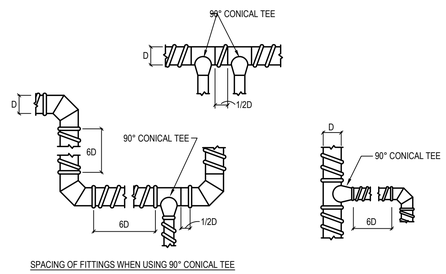

2 M3.2 MEDIUM AND HIGH VELOCITY DUCTWORK
NO SCALE

NOTE:
TURNING VANES IN HIGH AND MEDIUM PRESSURE DUCTWORK SHALL BE DOUBLE WIDTH. (SEE SECTION 15840 OF MECHANICAL SPECIFICATION FOR ADDITIONAL DUCT CONSTRUCTION INFORMATION AND RESTRICTIONS.)

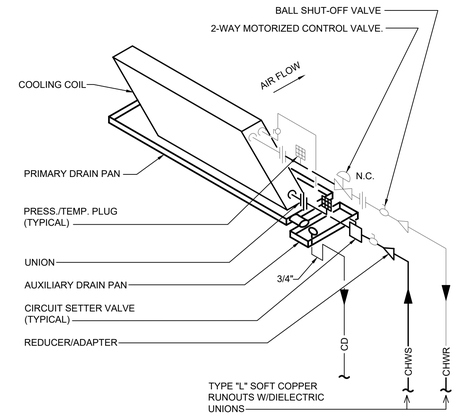

3 M3.2 CHILLED WATER COIL PIPING DETAIL
NO SCALE

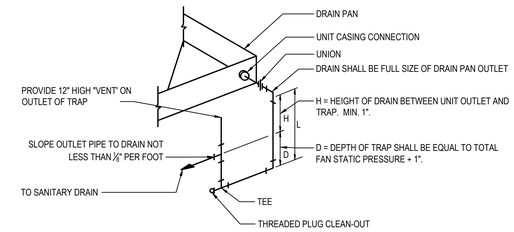

TRAP ON POSITIVE OR NEGATIVE SIDE OF FAN
H" = MIN. 1".
D" = MAX. TOTAL FAN STATIC PRESS. + 1".
L" = H + D + PIPE DIA. + INSULATION THICKNESS.

4 M3.2 CONDENSATE TRAP DETAIL
NO SCALE

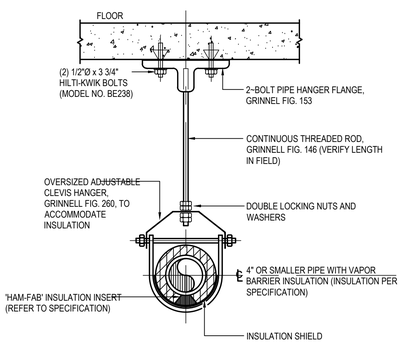

5 M3.2 PIPE HANGER DETAIL
NO SCALE

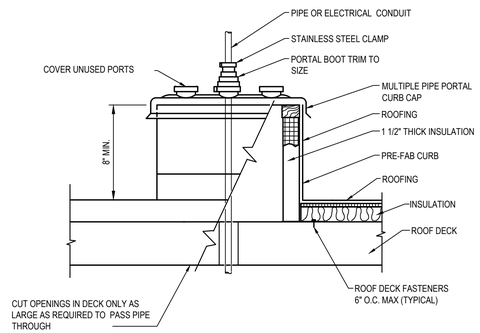

6 M3.2 PIPE PORTAL DETAIL
NOT TO SCALE

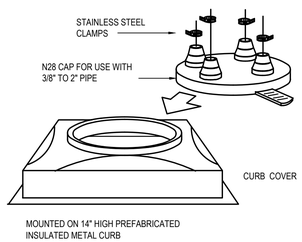

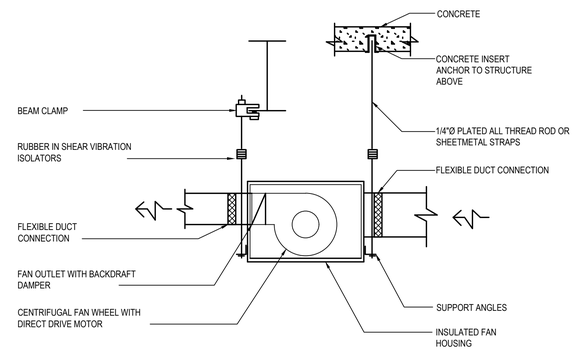

7 M3.2 IN-LINE EXHAUST FAN DETAIL
NOT TO SCALE

NOTE:
1) PROVIDE VARIABLE SPEED SWITCH ON THE SIDE OF THE CASING FOR FINAL AIR BALANCE.

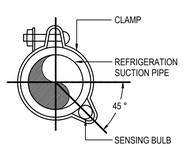

8 M3.2 REFRIGERANT SUCTION PIPE SENSING BULB DETAIL
NO SCALE

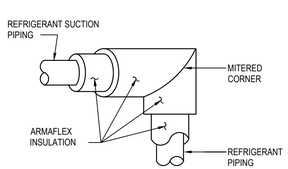

9 M3.2 TYPICAL INSULATED PIPING AND ELBOW DETAIL
NO SCALE

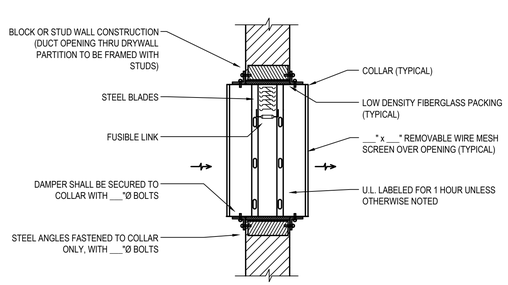

10 M3.2 AIR TRANSFER OPENING THRU WALL WITH FIRE DAMPER DETAIL
NO SCALE

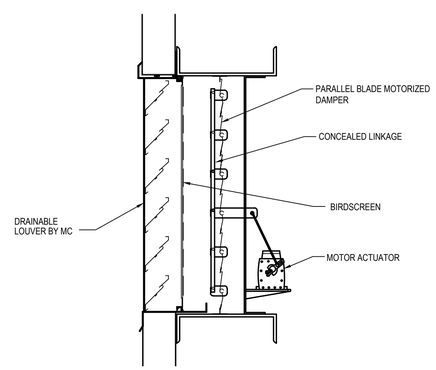

11 M3.2 LOUVER DAMPER DETAIL
NOT TO SCALE

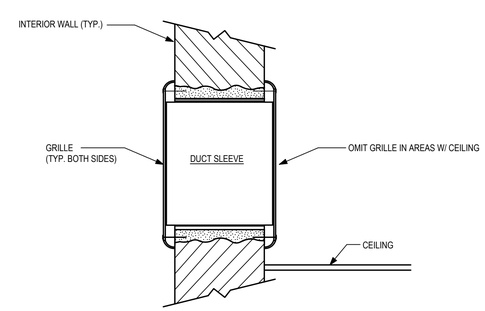

12 M3.2 RETURN AIR TRANSFER W/ GRILLES THRU NON-RATED WALL DETAIL
NOT TO SCALE

VILLAGE OF OAK PARK
CONSTRUCTION DOCUMENT(S)
REVIEWED FOR COMPLIANCE
KEEP A PRINTED APPROVED COPY OF THE PLANS ON SITE AT ALL TIMES FOR CONTRACTORS AND INSPECTORS

625 W Adams Street – 19th Floor
Chicago, IL 60661
312.320.3668

LICENSED PROFESSIONAL ENGINEER
ALEXANDER G. RADKOFF
062-073334
OF ILLINOIS

DESIGN FIRM LIC. NO: 184008703-002
DESIGN FIRM LIC. NO. EXP.: 04.30.2027
ILLINOIS LICENCE NUMBER: 062.073334
LIC. EXP.: 11.30. 2025

1144 Lake Street, LLC

BASE BUILDING MECHANICAL RENOVATIONS

1144 W LAKE ST
OAK PARK, IL 60301

NO.	DESCRIPTION	DATE
1	PERMIT REVISION 1	09/19/2025
1	ISSUED FOR PERMIT	08/28/2025

JOB NO.: 25.068

SCALE: AS SHOWN

TITLE: MECHANICAL DETAILS

SHEET: M3.2

8/24/2025 4:52:45 PM

NOTES:

1. PIPING MUST FOLLOW STANDARD REFRIGERANT PIPING TECHNIQUES IN STRICT ACCORDANCE W/ MANUFACTURER'S REQUIREMENTS.
2. WIRING MUST COMPLY WITH THE APPLICABLE LOCAL AND NATIONAL ELECTRIC CODES.
3. WIRING AND PIPING SHOWN ARE GENERAL POINTS-OF-CONNECTION GUIDES ONLY AND ARE NOT INTENDED FOR, OR TO INCLUDE ALL DETAILS, FOR A SPECIFIC INSTALLATION.
4. LIQUID LINE SOLENOID VALVE (SOLENOID DROP CONTROL) IS REQUIRED TO PREVENT REFRIGERANT MIGRATION TO THE COMPRESSOR.
5. TXVs NOT SHOWN. PROVIDE TXVS AS SCHEDULED.
6. CONTRACTOR TO PROVIDE SECONDARY DRAIN PAN FOR EACH HORIZONTAL UNIT.
7. PROVIDE SPRING ISOLATION FOR MOUNTING OF UNIT.

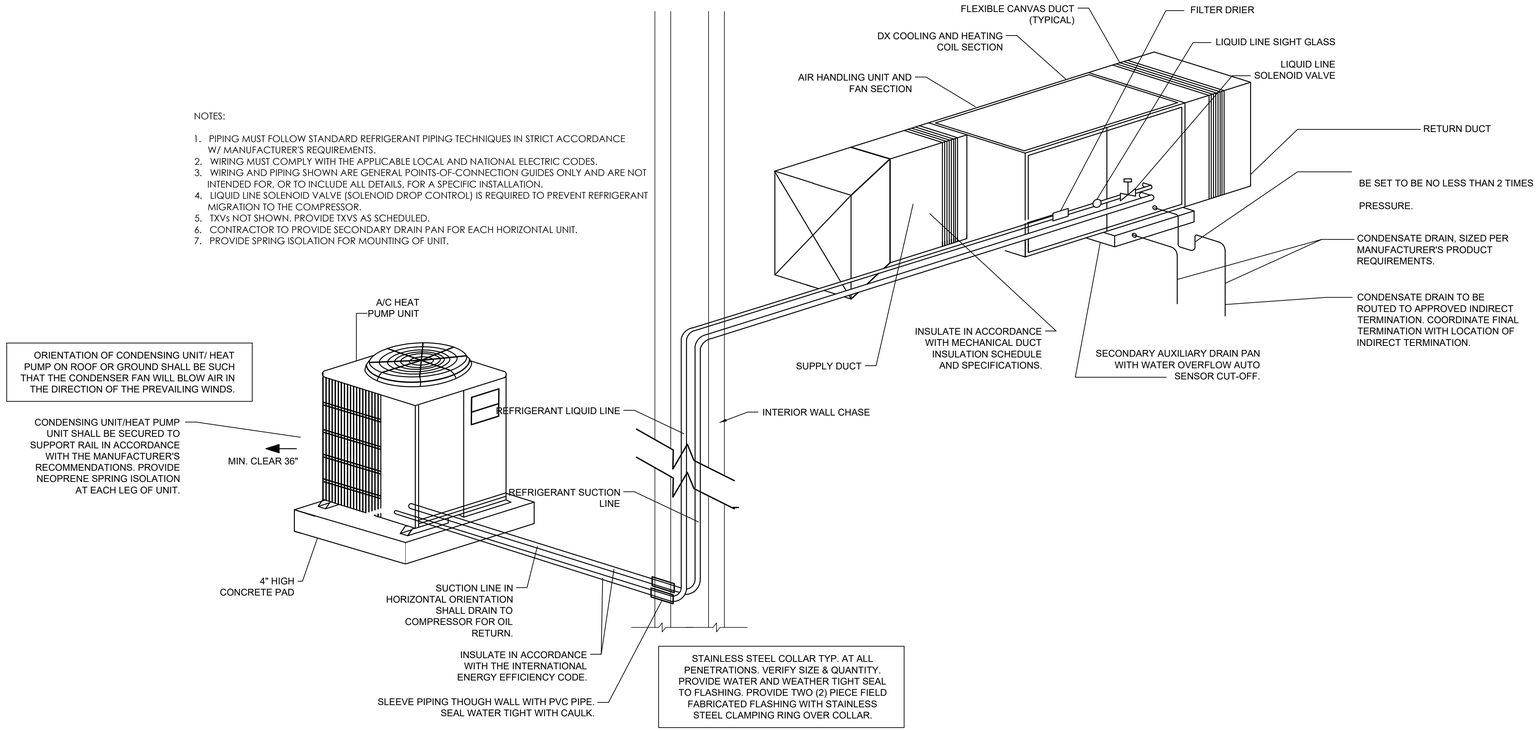

1 M3.3 SPLIT SYSTEM AIR CONDITIONER AND HORIZONTAL AIR HANDLING UNIT
NO SCALE

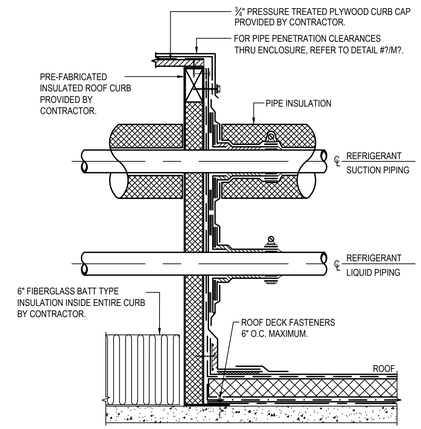

NOTES:

1. REFER TO THE ARCHITECTURAL DRAWINGS FOR ALL ROOFING AND FLASHING REQUIREMENTS.
2. ALL ROOFING WORK INCLUDING FLASHINGA ND COUNTER FLASHING SHALL BE THE RESPONSIBILITY OF THE GENERAL CONTRACTOR.
3. ROOF OPENINGS FOR PIPE/CONDUIT PENETRATIONS SHALL BE PROVIDED BY THE GNERAL CONTRACTOR.

2 M3.3 ROOF CURB/PIPE PORTAL DETAIL
NO SCALE

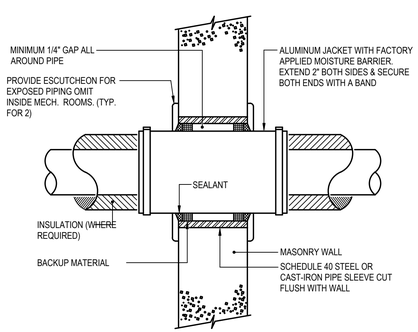

3 M3.3 WALL PIPE PENETRATION DETAIL
NO SCALE

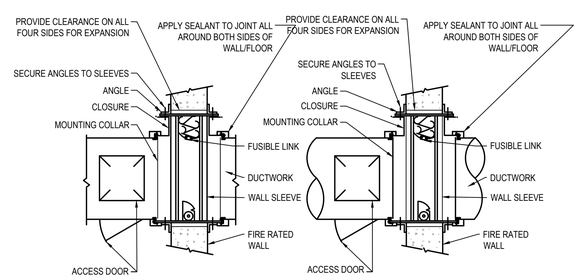

TYPE 'B' VERTICAL MOUNTING

TYPE 'C' VERTICAL MOUNTING

4 M3.3 FIRE DAMPERS
NO SCALE

NOTES:
1. ANGLES SHALL BE A MINIMUM OF 1 1/2" x 1 1/2" x 14GA. FASTEN TO COLLAR ONLY, WITH 1/4" DIA. NUTS & BOLTS OR WELDING 8" ON CENTER OR, NO. 10 SHEET METAL SCREWS 8" ON CENTER OR 3/16" STEEL POP RIVETS (SEE NOT 3 FOR CLEARANCE AND OVERLAP).
2. COLLARS SHALL BE OF THE SAME OR HEAVIER GAUGE AS THE DUCT TO WHICH IT IS ATTACHED. GAUGES SHALL CONFORM TO SMACNA OR ASHRAE DUCT STANDARDS.
3. WHEN THE FOLLOWING DUCT COLLARS CONNECTIONS ARE USED, THE MINIMUM GAUGE OF THE COLLAR SHALL BE 16 GAUGE ON DAMPERS NOT EXCEEDING 36"W x 24"H AND 14 GAUGE ON LARGER CURTAIN TYPE DAMPERS.
4. FIRE DAMPERS SHALL HAVE A CLEARANCE OF 1/8" PER FOOT ON HEIGHT AND WIDTH AND ANGLES SHALL INCREASE IN SIZE, PROPORTIONATELY, SO THAT THERE WILL BE A MINIMUM OF 1" OVERLAP ON THE PARTITION.
5. ON TYPE 'C' INSTALLATIONS, THE WALL COLLAR MUST BE 18 GAUGE OR HEAVIER.
6. MAXIMUM SINGLE DAMPER OF MULTIPLE DAMPER ASSEMBLY SHALL BE 40" x 40" IN VERTICAL MOUNTINGS, 42"H x 36"H IN HORIZONTAL MOUNTINGS.
7. IN MULTIPLE DAMPER ASSEMBLY, UNITS SHALL BE FASTENED TOGETHER.
8. FIRE DAMPER INSTALLATION SHALL BE IN ACCORDANCE WITH MANUFACTURER'S REQUIREMENTS "NFPA 90A", "UL 555", & "FIRE DAMPER & HEAT STOP GUIDE FOR AIR HANDLING SYSTEMS 1992 EDITION".
9. FIRE DAMPER SLEEVES SHALL HAVE BREAK-AWAY CONNECTIONS AT DUCT ATTACHMENTS.
10. ACCESS DOOR FOR A FIRE DAMPER LOCATED IN A RATED WALL DIRECTLY BEHIND A GRILLE OR REGISTER MAY BE ELIMINATED. THE FUSIBLE LINK MAY BE ACCESSED THRU THE REMOVABLE CORE.
11. FIRE DAMPERS LOCATED IN FIRE RATED FLOORS SHALL BE RATED FOR HORIZONTAL MOUNTING AND SHALL BE INSTALLED IN A SIMILAR MANNER TO THOSE INSTALLED IN FIRE RATED WALLS.
12. NOT REQUIRED ON FUME HOOD EXHAUST DUCTWORK.
13. ACCESS DOORS TO BE DOUBLE WALL INSULATED TYPE IF DUCTWORK IS SPECIFIED TO BE INSULATED TYPE.

VILLAGE OF OAK PARK
CONSTRUCTION DOCUMENT(S)
REVIEWED FOR COMPLIANCE
KEEP A PRINTED APPROVED COPY OF THE PLANS ON SITE AT ALL TIMES FOR CONTRACTORS AND INSPECTORS

625 W Adams Street – 19th Floor
Chicago, IL 60661
312.320.3668

LICENSED PROFESSIONAL ENGINEER
ALEXANDER G. RADKOFF
062-073334
OF ILLINOIS

DESIGN FIRM LIC. NO: 184008703-002
DESIGN FIRM LIC. NO. EXP : 04.30.2027
ILLINOIS LICENCE NUMBER: 062.073334
LIC. EXP.: 11.30. 2025

1144 Lake Street, LLC

BASE BUILDING MECHANICAL RENOVATIONS

1144 W LAKE ST
OAK PARK, IL 60301

NO.	DESCRIPTION	DATE
1	PERMIT REVISION 1	09/19/2025
1	ISSUED FOR PERMIT	08/25/2025

JOB NO.: 25.068

SCALE: AS SHOWN

TITLE: MECHANICAL DETAILS

SHEET: M3.3

8/24/2025 4:52:45 PM

AIR HANDLING UNIT SCHEDULE

UNIT DES.	SERVES	SUPPLY FAN DATA						REFRIGERANT	DX COOLING COIL								AHU ELECTRICAL DATA			MODEL	WEIGHT	BASIS OF DESIGN	REMARKS
		CFM	MIN OA CFM	AIRFLOW STAGES	E.S.P. IN. WG	RPM	BHP		COOLING STAGES	COIL ROWS	EA DB	EA WB	LA DB	LA WB	SENS. MBH	TOTAL MBH	VOLTS/PH	MCA	MOCP				
AHU-1	REAR TENANT SPACE	5025	575	3	0.75	790	2.08	R-454B	3.0	4	76.1°F	63.4°F	55.0°F	54.0°F	140.1	114.0	208/3PH	19.0	30.0	40RLAA14T1A5-UA1A0	1150 LBS.	CARRIER	1 THRU 20

REMARKS:
1. PROVIDE APPROPRIATE CLEARANCE FOR SERVICE AND MAINTENANCE PER THE MANUFACTURER'S INSTALLATION REQUIREMENTS.
2. PROVIDE PRIMARY CONDENSATE DRAIN AND CONDENSATE DRAIN TRAP, SECONDARY DRAIN PAN WITH UL RATED OVERFLOW SENSOR CUTOFF.
4. PROVIDE AUXILIARY DRY CONTACTS FOR AUXILIARY ELECTRIC RESISTANCE HEATER.
5. PROVIDE SINGLE POINT ELECTRICAL CONNECTION.
6. PROVIDE FULLY INSULATED CABINET.
7. R-454B REFRIGERANT.
8. PROVIDE OUTDOOR TEMPERATURE AND HUMIDITY SENSOR.
9. PROVIDE DEHUMIDIFICATION CONTROL.
10. PROVIDE MERV 8 FILTERS.
11. PROVIDE DISCONNECT.
12. PROVIDE AIR FLOW SWITCH.
13. PROVIDE VIBRATION ISOLATION.
14. HORIZONTAL AIR HANDLING UNIT.
15. PROVIDE TXV.
16. PROVIDE PROGRAMMABLE 7 DAY THERMOSTAT.
17. PROVIDE FIELD INSTALLED ECONOMIZER X ULTRA LOW LEAK WITH FAULT DETECTION AND DIAGNOSTICS (FDD), CONTROLLER, MODULATING DAMPERS, CO2 SENSOR CONTROL AND SENSOR FOR ENTHALPY SENSOR.
18. PROVIDE VFD DISPLAY KIT AND STAGED AIR VOLUME.
19. PROVIDE HORIZONTAL OVERHEAD SUSPENSION KIT.
20. PROVIDE INTEGRAL A2L LEAK DETECTION SYSTEM WITH AUTOMATIC MITIGATION ACTION.
21. PROVIDE OVERHEAD SUSPENSION PACKAGE.

AIR COOLED CONDENSING UNIT SCHEDULE

UNIT DES.	SERVES	NO. OF STAGES	REFRIGERANT	NOMINAL CAPACITY		COOLING EFF.		EAT DEG F.	ELECTRICAL			REFRIGERANT		REFRIGERANT LINESET			SOUND PRESS. DBA	WEIGHT	MANUF.	MODEL	REMARKS
				COOL MBTUH	TONS	EER	IEER (WITH 2 SPEED FAN)	COOL -ING	VOLTS/PH.	MCA	MOCP	REFRIGERANT TYPE	CHARGE	QTY	SUCTION	LIQUID					
CU-1	AHU-1	3	R-454B	150.0	12.5	11.0	15.5	95	208/3	49.0	60.0	R-454B	(2) SETS AT 15.0 LBS - 0 OZ. EACH	2	1-3/8"	1/2"	82.8	654 LBS.	CARRIER	38AXDU14A0A5-A1C0	1 THRU 20

NOTES:
1. MCA - MINIMUM CIRCUIT AMPACITY, RFS - RECOMMENDED FUSE SIZE, MFS- MAXIMUM FUSE SIZE, MOCP - MAXIMUM OVERCURRENT PROTECTION
2. PROVIDE NON-FUSED DISCONNECT.
3. MOUNT UNIT ON EQUIPMENT 24" EQUIPMENT SUPPORT RAILS WITH VIBRATION ISOLATION RAILS.
4. PROVIDE LIQUID LINE SOLENOID VALVE KIT.
5. PROVIDE FREEZE PROTECTION KIT (EVAPORATOR FREEZE THERMOSTAT)
6. PROVIDE WINTER START CONTROL.
7. PROVIDE UNPOWERED CONVENIENCE OUTLET.
8. PROVIDE (2) FILTER DRIER.
9. PROVIDE HIGH AND LOW PRESSURE SWITCHES.
10. PROVIDE THERMOSTATIC EXPANSION VALVE.
11. PROVIDE BRASS SUCTION AND LIQUID SERVICE VALVES WITH SWEAT CONNECTIONS AND SERVICE PORTS.
12. PROVIDE CRANKCASE HEATER.
13. PROVIDE COMPRESSOR SOUND JACKET.
14. PROVIDE (2) SIGHT GLASS.
15. PROVIDE LONG LINE APPLICATION KIT ON RUNS GREATER THAN 80 EQUIVALENT FEET OR 40 VERTICAL FEET.
16. PROVIDE HARD START KIT (COMPRESSOR START ASSIST CAPACITOR AND RELAY).
17. PROVIDE 7-DAY PROGRAMMABLE THERMOSTAT.
18. PROVIDE COMPRESSOR SOUND HOOD, FORWARD SWEPT CONDENSER FAN BLADE, QUITE MOUNT SPLIT POST COMPRESSOR GROMMETS.
19. PROVIDE STAGED AIR VOLUME VFD OPTION.
20. PROVIDE LOW AMBIENT CONTROL KIT

GRAVITY RELIEF VENTILATOR SCHEDULE

TAG	LOCATION	INTAKE/ EXHAUST	MIN OA CFM	ECONOMIZER CFM	PRESSURE DROP IN. W.C	THROAT SIZE	HOOD SIZE	AIR OPG. HEIGHT ABOVE ROOF	WEIGHT (LBS.)	MANUFACTURER	MODEL	REMARKS
GRV-1	GROUND FLOOR LOW ROOF	INTAKE	575	5025	0.089	20" X 48"	44" X 75"	24"	107.0	GREENHECK	FGI-20X48	1,2
GRV-2	GROUND FLOOR LOW ROOF	EXHAUST	600	N/A	0.08	12" ROUND	29" ROUND	24"	107.0	GREENHECK	GRSR 12	1,2

REMARKS:
1. PROVIDE BIRDSCREEN AND 18" INSULATED CANTED ROOF CURB.
2. PROVIDE MOTORIZED CONTROL DAMPER (120V/1PH/60HZ). MC SHALL COORDINATE ELECTRICAL REQUIREMENTS WITH EC.
3. PROVIDE BACKDRAFT DAMPER.

ELECTRIC DUCT HEATING COIL

UNIT DES.	TYPE	SERVES	CFM	FACE VEL. FPM	MBTUH	KW	AIR TEMP RISE F.	NO. OF STAGES	AMPS	MCA	MOCP	ELECTRICAL VOLTS/PH.	DUCT DIMENSIONS	BASIS OF DESIGN	MODEL	REMARKS
EDH-1	SLIP-IN, OPEN COIL	AHU-1	5025	420	119.5	35.0	22.0	SCR	97.2	121.5	150.0	208/3	18/10	INDEECO INC.	MODEL QUA	1,2,3,4

REMARKS:
1. PROVIDE DISCONNECT SWITCH.
2. PROVIDE FOR REMOTE DUCT TEMPERATURE SENSOR CONTROL.
3. PROVIDE AUTOMATIC AND MANUAL THERMAL OVERLOAD CUTOUTS, AIR FLOW SAFETY SWITCH, DOOR INTERLOCK SWITCH, FUSED FOR EACH CIRCUIT, CONTROL TRASFORMER.
4. PROVIDE MAGNETIC CONTACTORS FOR EACH STAGE FOR NUMBER OF STAGES SCHEDULED.
5. PROVIDE AUXILIARY CONTACTS FOR INTEGRATION WITH AHU-1 SYSTEM AND FUTURE BUILDING AUTOMATION SYSTEM.
6. PROVIDE ROUND TO RECTANGULAR TO ROUND TRANSITION ACCESSORY WHERE INSTALLED AT SPIRAL/ROUND DUCTWORK.

8/24/2025 4:52:45 PM

VILLAGE OF OAK PARK
CONSTRUCTION DOCUMENT(S)
REVIEWED FOR COMPLIANCE
KEEP A PRINTED APPROVED COPY OF THE PLANS ON SITE AT ALL TIMES FOR CONTRACTORS AND INSPECTORS

625 W Adams Street – 19th Floor
Chicago, IL 60661
312.320.3668

LICENSED PROFESSIONAL ENGINEER
ALEXANDER G. RADKOFF
062-073334
STATE OF ILLINOIS

DESIGN FIRM LIC. NO: 184008703-002
DESIGN FIRM LIC. NO. EXP.: 04.30.2027
ILLINOIS LICENCE NUMBER: 062.073334
LIC. EXP.: 11.30. 2025

1144 Lake Street, LLC

BASE BUILDING MECHANICAL RENOVATIONS

1144 W LAKE ST
OAK PARK, IL 60301

NO.	DESCRIPTION	DATE
1	PERMIT REVISION 1	09/19/2025
1	ISSUED FOR PERMIT	08/25/2025

JOB NO.: 25.068

SCALE: AS SHOWN

TITLE: MECHANICAL SCHEDULES

SHEET: M4.1

CHILLED WATER, NATURAL GAS FIRED ROOFTOP UNIT WITH ENERGY RECOVERY SCHEDULE

TAG	NOM. TONS	MIN. O/A CFM	MAX. O/A CFM	SUPPLY FAN DATA							POWER EXHAUST FAN DATA							EER	MRE (LB/KWH)	TOTAL ENTHALPY ENERGY RECOVERY WHEEL PERFORMANCE										
				CFM	E.S.P. IN. WG	FEI	QTY	HP	RPM	BHP	CFM	E.S.P. IN. WG	FEI	QTY	HP	RPM	BHP			SUMMER OA DB/WB (°F)	SUMMER RA DB/WB (°F)	SUMMER OA POST WHEEL DB/WB (°F)	SUMMER RA POST WHEEL DB/WB (°F)	SUMMER TOTAL EFFECTIVENESS (%)	SUMMER SENSIBLE EFFECTIVENESS (%)	WINTER OA DB (°F)	WINTER RA DB/WB (°F)	WINTER OA POST WHEEL DB/WB (°F)	WINTER RA POST WHEEL DB/WB (°F)	WINTER TOTAL EFFECTIVENESS (%)
RTU-1	52.0	-	6520	21400	2.5	0.98	2.0	20.0	1710	14.23	20150	1.0	1.00	1.0	5.0	1272	3.63	11.60	7.75	91.3 / 74.2	75.0 / 62.0	78.5 / 65.3	87.6 / 71.4	74.5%	77.6%	-10.0 / -11.0	70.0 / 54.4	54.3 / 49.5	13.1 / 13.1	75.8%

CHILLED WATER, NATURAL GAS FIRED ROOFTOP UNIT WITH ENERGY RECOVERY SCHEDULE (CONTINUED)

TAG	CHILLED WATER COOLING COIL DATA												HEATING CAPACITY						AIR FILTER		ELECTRICAL DATA			SOUND (dBA)	W.T. (LBS)	BASIS OF DESIGN AAON MODEL NUMBER	REMARKS
	MAX. FACE VEL. (FPM)	AIR P.D. (IN. H20)	COIL E.A.T. DB/WB	L.A.T. DB/WB	TOTAL NET MBH	SENS. NET MBH	COOLING MEDIA	ENT. FLUID TEMP. (F)	LVG. FLUID TEMP. (F)	FLUID FLOW (GPM)	MAX. WATER P. D. (FT. H_2O)	ROWS/FPI	HEAT TYPE	GAS HEATING SETTING	STG.S	INPUT MBH	OUTPUT MBH	AFUE	MERV RATING	DEPTH	VOLTS/ PH	MCA	MOCP				
RTU-1	511.9	0.36	75.8 / 62.8	55.0 / 53.0	602.1	475.5	CHILLED WATER - 0% GLYCOL	44.0	54.0	125	14.1	6 / 10	N.G.	HIGH	10	600.0	486.0	81%	13	2"	208 / 3	155.0	200.0	94.0	6022	RNA-075-E-0-8-00F0K-CB1LO	1 THRU 23

REMARKS + NOTES:

1. EQUIP UNIT WITH LOW LEAK ECONOMIZER WITH BAROMETRIC RELIEF, DIFFERENTIAL ENTHALPY CONTROL WITH FAULT DETECTION AND DIAGNOSTICS.
2. PROVIDE POWERED EXHAUST FAN FOR BUILDING PRESSURIZATION.
3. FIELD INSTALL DIRTY FILTER INDICATOR. CONTRACTOR TO PROVIDE AND MAINTAIN MERV-13 FILTERS, 2" THICK. INSTALL NEW FILTERS IMMEDIATELY PRIOR TO SPACE TURNOVER.
4. EQUIP UNIT WITH FACTORY NON-FUSED DISCONNECT.
5. EQUIP UNIT WITH NON-POWERED 120V/1 WEATHER PROTECTED CONVENIENCE RECEPTACLE.
6. EQUIP UNIT WITH HINGED ACCESS PANELS.
7. EQUIP UNIT WITH HIGH AND LOW PRESSURE SWITCHES.
8. EQUIP UNIT WITH WITH THRU-THE-BASE POWER CONNECTIONS.
9. EQUIP UNIT WITH SHORT CYCLE COMPRESSOR PROTECTION AND COMPRESSOR DELAY CONTROL CIRCUIT.
10. PURCHASE 10 YEAR FURNACE HEAT EXCHANGER WARRANTY.
11. EQUIP UNIT WITH FACTORY CONDENSATE OVERFLOW SENSOR.
12. EQUIP UNIT WITH INTEGRAL DISCHARGE AIR TEMPERATURE SENSOR.
13. INTERLOCK DUCT SMOKE DETECTORS WITH UNIT TO SHUT DOWN WHEN SMOKE IS DETECTED.
14. EQUIP ALL UNITS WITH AAON RTU OPEN PROTOCOL CONTROLLERS.
15. BALANCE TO BE PERFORMED UTILIZING SHEAVE ADJUSTMENTS ONLY. VFD DISPLAY KIT IS TO BE UTILIZED ONLY FOR VFD TROUBLESHOOTING.
16. PROVIDE 24" INSULATED SLANTED AND CANTED ROOF CURB WITH VIBRATION ISOLATION RAILS.
17. PROVIDE PHASE MONITORING SYSTEM
18. PROVIDE MOTORIZED CONTROL OA AND EA DAMPERS.
19. PROVIDE SUPPLY AND RETURN DUCT SMOKE DETECTOR AT UNIT.
20. PROVIDE HORN/STROBE ANNUNCIATOR.
21. PROVIDE STAINLESS STEEL NATURAL GAS HEATING EXCHANGER.
22. PROVIDE STAINLESS STEEL DRAIN PAN.
23. PROVIDE 6 ROW CHILLED WATER COIL AND CHILLED WATER COIL PACKAGED WITH TWO WAY MOTORIZED CONTROL VALVE , SUPPLY/RETURN PRESSURE/TEMP PLUG, THERMOMETER WITH SEPARABLE SOCKET, BUTTERFLY VALVES WITH MEMORY STOP, FLOW MEASURING STATION, STRAINER WITH BLOW-OFF VALVES. COIL SHALL BE A COONEY FREEZE BLOCK COIL WITH PRESSURE RELIEF VALVES AT COIL BENDS. PROVIDE 30 MONTH WARRANTY FOR COONEY COIL.

NOTE: UNIT ELEVATION IS 610 FEET ASL. COOLING CALCULATIONS BASED ON 95°F OUTDOOR AIR CONDITIONS.

HVAC LOUVERS

TAG	MAKE/MODEL	AIR FLOW CFM	INTAKE OR EXH.	SIZE			FREE AREA VEL. FPM	WATER PENETRATION VELOCITY (FPM)	P.D. IN W.C.	MATERIAL	FRAME TYPE	BLADE TYPE	FINISH/COLOR	NOTES
				W	H	D								
LVR 1-1	POTTORFF EFD-635	5025	EXHAUST	48"	30"	6"	1,000	1250	0.10	ALUMINUM	CHANNEL, DRAINABLE HEAD	HORZONTAL	BY ARCHITECT	1,2,3,4

NOTES:
1. PROVIDE BIRD SCREEN ON INSIDE FACE OF LOUVER.
2. PROVIDE 120V MOTORIZED CONTROL DAMPER AT INSIDE FACE OF LOUVER.
3. FINISH AND COLOR SHALL BE SELECTED BY ARCHITECT FROM MANUFACTURER'S CUSTOM RANGE OF COLORS.
4. LOUVER SHALL BE ACMA RATED FOR WATER PENETRATION AT VELOCITY LESS THAN VALUE SHOWN IN SCHEDULE.

EXHAUST FAN SCHEDULE

TAG	SERVES	TYPE	MIN. CFM	MIN. CFM	ESP (IN W.C.)	FEI	FAN RPM	MAX SONES (OUTLET)	WEIGHT (LB)	INLET (dBA)	MOTOR					BASIS OF DESIGN		REMARKS
											BHP	FLA	MCA	MOCP	VOLTS/ PH	MFG.	MODEL	
EF-1	REAR RETAIL RELIEF AIR	CEILING INLINE	500	5025	0.3"	1.27	1539	17.1	112	72	0.8	6.6	8.2	15.0	208/3	GREENHECK	SQ-16-M2	1 THRU 6

REMARKS:
1. PROVIDE INTEGRAL BACKDRAFT DAMPER.
2. PROVIDE INSULATED CABINET.
3. PROVIDE DISCONNECT.
4. PROVIDE VIBRATION SPRING ISOLATORS.
5. EXHAUST FAN SHALL OPERATE CONTINUOUSLY VIA VARIABLE FREQUENCY DRIVE WITH BYPASS AND BUILDING PRESSURIZATION SENSOR..
6. EXHAUST FAN SHALL BE CONFIGURED FOR SIDE DISCHARGE INLINE FAN OPERATION.

ELECTRIC CEILING HEATER SCHEDULE

TAG	TYPE	KW	ELEC. VOLT/PH	AMPS	BASIS OF DESIGN	MODEL	REMARKS
ECH-1	CEILING	4.0	208/1	19.2	BERKO	QFF4008	1,2,3,4
ECH-2	CEILING	4.0	208/1	19.2	BERKO	QFF4008	1,2,3,4

REMARKS:
1. SURFACE MOUNTED ELECTRIC WALL HEATER.
2. INTEGRAL DISCONNECT.
3. TAMPER PROOF COVER.
4. INTEGRAL THERMOSTAT.

TRANSFER AIR DUCT SCHEDULE

DESIGNATION	DUCT SIZE	CFM RANGE	DETAIL
T1	60 x 24	0-5500	#6/M-2.3
T2	66 x 60	0 - 12000	#7/M-2.3

NOTES:
1. SIZING BASED ON 0.05"/100 FT. P.D. ~ 700 FPM
2. REFER TO DETAIL FOR DUCT CONFIGURATION.
3. PROVIDE 1" THICK ACOUSTICAL LINER.
4. EACH END OF TRANSFER DUCT FOR TYPE T1 SHALL BE EQUIPPED WITH LOUVERED SINGLE DEFLECTION RETURN GRILLE OF EQUAL SIZE DUCT CONNECTION WITH OPPOSED BLADE DAMPER (MODEL PRICE 530D).
5. EACH END OF TRANSFER DUCT FOR TYPE T2 SHALL BE EQUIPPED WITH A GALVANIZED STEEL CONSTRUCTION BIRDSCREEN.

VILLAGE OF OAK PARK
CONSTRUCTION DOCUMENT(S)
REVIEWED FOR COMPLIANCE
KEEP A PRINTED APPROVED COPY OF THE PLANS ON SITE AT ALL TIMES FOR CONTRACTORS AND INSPECTORS

625 W Adams Street – 19th Floor
Chicago, IL 60661
312.320.3668

LICENSED PROFESSIONAL ENGINEER
ALEXANDER G. RADKOFF
062-073334
OF ILLINOIS

DESIGN FIRM LIC. NO: 184008703-002
DESIGN FIRM LIC. NO. EXP : 04.30.2027
ILLINOIS LICENCE NUMBER: 062.073334
LIC. EXP.: 11.30. 2025

1144 Lake Street, LLC

BASE BUILDING MECHANICAL RENOVATIONS

1144 W LAKE ST
OAK PARK, IL 60301

NO.	DESCRIPTION	DATE
1	PERMIT REVISION 1	09/19/2025
1	ISSUED FOR PERMIT	08/25/2025

JOB NO.: 25.068

SCALE: AS SHOWN

TITLE: MECHANICAL SCHEDULES

SHEET: M4.2

8/24/2025 4:52:45 PM

THERMAL INSULATION SCHEDULE

SYSTEM	SYSTEM- LOCATION	OPERATING TEMPERATURE	MATERIAL	SMACNA CLASS					REMARKS
				TYPE	THICKNESS IN.S	DENSITY LB/CU. FT.	INSTALLED "R" VALUE/ CONDUCTIVITY	JACKET	
DUCT	SUPPLY AIR DUCT - INDOOR CONCEALED, ACCESSIBLE	40-120	MINERAL-FIBER	BLANKET	2.0"	0.75	5.0	FSK	1
DUCT	SUPPLY AIR DUCT - INDOOR CONCEALED, INACCESSIBLE	40-120	MINERAL-FIBER	BOARD	1.5 "	2.25	6.5	FSK	2
DUCT	RETURN AIR DUCT - INDOOR CONCEALED, ACCESSIBLE	40-120	MINERAL-FIBER	LINER	1.0 "	2.25	4.3	FSK	1
DUCT	RETURN AIR DUCT - INDOOR CONCEALED, INACCESSIBLE	40-120	MINERAL-FIBER	LINER	1.0 "	2.25	4.3	FSK	2
DUCT	SUPPLY AIR DUCT - INDOOR EXPOSED	40-120	MINERAL-FIBER	LINER	1.0 "	2.25	4.3	FSK	7,8
DUCT	RETURN AIR DUCT - INDOOR EXPOSED	40-120	MINERAL-FIBER	LINER	1.0 "	2.25	4.3	FSK	7,8
DUCT	EXHAUST DUCT WITHIN 10 FEET OF EXTERIOR OPENING - INDOOR	40-120	MINERAL-FIBER	BOARD	1.0 "	2.25	4.3	FSK	7
DUCT	OUTSIDE AIR DUCT - INDOOR	0-100	MINERAL-FIBER	BOARD	3.0 "	2.25	12.0	FSK	6
DUCT	SUPPLY, RETURN, RELIEF, EXHAUST DUCT - OUTDOORS	40-120	*	*	*	*	12	FSK	11
DUCT	POOL SUPPLY AND RETURN DUCTWORK - INDOORS	40-120	UNINSULATED*	-	-	-	-	-	9,10
DUCT	POOL SUPPLY AND RETURN DUCTWORK - OUTDOORS	40-120	*	*	*	*	12	FSK	11
PIPING	CHILLED WATER - CONDITIONED SPACE	40-60	MINERAL-FIBER	PRE-MOLDED	REFER TO PIPING INSULATION THICKNESS SCHEDULE			ASJ+SSL	5
PIPING	CHILLED WATER - UNCONDITIONED SPACE	40-60	MINERAL-FIBER WICKING	PRE-MOLDED				ASJ+SSL	5,6
PIPING	REFRIGERANT - CONDITIONED SPACE	40-60	MINERAL-FIBER	PRE-MOLDED				ASJ+SSL	5
PIPING	REFRIGERANT - UNCONDITIONED SPACE	40-60	MINERAL-FIBER WICKING	PRE-MOLDED				ASJ+SSL	5
PIPING	CONDENSATE DRAINAGE - COPPER PIPE	40-60	MINERAL-FIBER WICKING	PRE-MOLDED				ASJ+SSL	5

NOTES:
1. CONCEALED, ACCESSIBLE LOCATIONS - ABOVE LAY-IN OR ACCESSIBLE CEILINGS, ACCESSIBLE MECHANICAL SHAFTS.
2. CONCEALED, INACCESSIBLE LOCATIONS - ABOVE HARD CEILINGS, (DRY WALL, PLASTER), MECHANICAL SHAFTS, BEHIND WALLS.
3. FOR DUCTS LOCATED OUTDOORS PROVIDE WATERPROOF CONSTRUCTION WITH WATER & UV RESISTANT MASTIC ON ALL JOINTS. INTERNALLY LINE WITH ACOUSTICAL DUCT LINER. CROSS-BREAK TOP TO SHED WATER.
4. DO NOT INSULATE:
   - TRANSFER AIR DUCTWORK (ACOUSTICALLY LINE DUCT)
5. COVER EXPOSED PIPING LOCATED BELOW 7' 0" ABOVE FINISHED FLOOR WITH PVC JACKET.
6. MULTIPLE INSULATION METHODS MAY BE USED TO ACHIEVE THE TOTAL REQUIRED R-VALUE.
7. DUCTWORK SHALL BE CLEANED AND PREPARED FOR PAINTING WHERE EXPOSED OR VISIBLE TO OCCUPANTS. COLOR TO BE SELECTED BY ARCHITECT.
8. FOR EXPOSED SPIRAL DUCTWORK, PROVIDE PRE-KERFED SPIRAL DUCTLINER WITH ANTIMICROBIAL COATING AND FSK LAMINATE COATING.
11. BASIS OF DESIGN OUTDOOR DUCTWORK INSULATION SHALL BE R-12 MINIMUM THERMADUCT OUTDOOR PREINSULATED PHENOLIC DUCTWORK. COLOR SHALL BE SELECTED BY ARCHITECT.

DUCT CONSTRUCTION SCHEDULE

SYSTEM	LOCATION IN DUCT SYSTEM	MATERIAL	SMACNA CLASS				DUCT TEST PRESS. INs W.C.	REMARKS
			STATIC PRESSURE IN.S W.C.	SEAL CLASS	LEAKAGE CLASS (RECT./ROUND)	POS. or NEG.		
RTU-1	SUPPLY AIR DUCT 15 FEET DOWNSTREAM OF FAN DISCHARGE.	GALVANIZED STEEL	3"	A	12	POS.	3	1
AHU-1	SUPPLY AIR DUCT 15 FEET DOWNSTREAM OF FAN DISCHARGE.	GALVANIZED STEEL	2"	A	12	POS.	2	1
RTU-1	SUPPLY DUCT	GALVANIZED STEEL	2"	A	12	POS.	1	1
AHU-1	SUPPLY DUCT	GALVANIZED STEEL*	1"	B	12	POS.	1	1,2
RTU-1 & AHU-1	RETURN DUCTS	GALVANIZED STEEL*	1"	B	12	POS.	1	1,2
VARIOUS	OUTSIDE AIR INTAKE AND MIXED AIR DUCT	GALVANIZED STEEL	2"	A	12	NEG.	2	1
VARIOUS	TRANSFER AIR DUCT	GALVANIZED STEEL	1"	A	24/12	NEG.	1	
VARIOUS	GENERAL EXHAUST DUCT OVER 46' RUN	GALVANIZED STEEL	2"	A	12/6	NEG.	2	
VARIOUS	GENERAL EXHAUST DUCT RUNS UNDER 45' RUN	GALVANIZED STEEL	1"	A	24/12	NEG.	1	2

NOTES:
1. FOR DUCTS LOCATED OUTDOORS, PROVIDE BASIS OF DESIGN THERMADUCT OUTDOOR R-12 MINIMUM PREINSULATED PHENOLIC DUCTWORK WATERPROOF CONSTRUCTION WITH WATER & UV RESISTANT VINYL CLAD WITH WELDED OR COHESIVELY BONDED SEAMS. CROSS-BREAK TOP TO SHED WATER. COLOR SHALL BE SELECTED BY ARCHITECT.
2. DUCTWORK FOR POOL DEHUMIDIFIER AND EXHAUST SYSTEM EXPOSED TO CHLORINATED AIR SHALL BE CLEANED AND PREPARED FOR PAINTING WHERE EXPOSED OR VISIBLE TO OCCUPANTS. PRIME WITH AROMATIC ZINC-RICH URETHANE AND HIGH PERFORMANCE HYDROPHOBIC ACRYLIC. COLOR TO BE SELECTED BY ARCHITECT.

PIPE INSULATION THICKNESS SCHEDULE

FLUID OPERATING TEMPERATURE AND USAGE (°F)	INSULATION CONDUCTIVITY		NOMINAL PIPE OR TUBE SIZE (IN)				
	CONDUCTIVITY BTU·IN.(h·ft^2·°F)	MEAN RATING TEMPERATURE (°F)	< 1	1 to < 1 $\frac{1}{2}$	1 $\frac{1}{2}$ < 4	4 to < 8	≥ 8
> 350	0.32 - 0.34	250	4.5	5.0	5.0	5.0	5.0
251 - 350	0.29 - 0.32	200	3.0	4.0	4.5	4.5	4.5
201 - 250	0.27 - 0.30	150	2.5	2.5	2.5	3.0	3.0
141 - 200	0.25 - 0.29	125	1.5	1.5	2.0	2.0	2.0
105 - 140	0.21 - 0.28	100	1.0	1.0	1.5	1.5	1.5
40 - 60	0.21 - 0.27	75	0.5	0.5	1.0	1.0	1.0
40	0.20 - 0.26	50	0.5	1.0	1.0	1.0	1.5

REMARKS:

PIPING SERVING AS PART OF A HEATING OR COOLING SYSTEM SHALL BE THERMALLY INSULATED IN ACCORDANCE WITH TABLE ABOVE (IECC 2021 TABLE C403.12.3) WITH THE FOLLOWING EXCEPTIONS:
1. FACTORY-INSTALLED PIPING WITHIN HVAC EQUIPMENT TESTED AND RATED IN ACCORDANCE WITH A TEST PROCEDURE REFERENCED BY THIS CODE.
2. FACTORY-INSTALLED PIPING WITHIN ROOM FAN-COILS AND UNIT VENTILATORS TESTED AND RATED ACCORDING TO AHRI 330 (EXCEPT THAT THE SAMPLING AND VARIATION PROVISIONS OF SECTION 6.5 SHALL NOT APPLY) AND AHRI 840, RESPECTIVELY.
3. PIPING THAT CONVEYS FLUIDS THAT HAVE A DESIGN OPERATING TEMPERATURE RANGE BETWEEN 60°F AND 105°F.
4. PIPING THAT CONVEYS FLUIDS THAT HAVE NOT BEEN HEATED OR COOLED THROUGH THE USE OF FOSSIL FUELS OR ELECTRIC POWER.
5. STRAINERS, CONTROL VALVES, AND BALANCE VALVES ASSOCIATED WITH PIPING 1 INCH OR LESS IN DIAMETER.
6. DIRECT BURIED PIPING THAT CONVEYS FLUIDS AT OR BELOW 60°F.

VILLAGE OF OAK PARK
CONSTRUCTION DOCUMENT(S)
REVIEWED FOR COMPLIANCE
KEEP A PRINTED APPROVED COPY OF THE PLANS ON SITE AT ALL TIMES FOR CONTRACTORS AND INSPECTORS

625 W Adams Street – 19th Floor
Chicago, IL 60661
312.320.3668

LICENSED PROFESSIONAL ENGINEER
ALEXANDER G. RADKOFF
062-073334
OF ILLINOIS

DESIGN FIRM LIC. NO: 184008703-002
DESIGN FIRM LIC. NO. EXP : 04.30.2027
ILLINOIS LICENCE NUMBER: 062.073334
LIC. EXP.: 11.30. 2025

1144 Lake Street, LLC

BASE BUILDING MECHANICAL RENOVATIONS

1144 W LAKE ST
OAK PARK, IL 60301

NO.	DESCRIPTION	DATE
2	PERMIT REVISION 1	09/19/2025
1	ISSUED FOR PERMIT	08/26/2025

JOB NO.: 25.068

SCALE: AS SHOWN

TITLE: MECHANICAL SCHEDULES

SHEET: M4.3

8/24/2025 4:52:45 PM

VENTILATION SCHEDULE

AIR HANDLING UNIT / EXHAUST FAN	AREA SERVED	SPACE DESIGNATION	AREA RATE			PEOPLE RATE				TOTAL REQ'D VENT @ ROOM (CFM)	VENT EFFECTIVENESS (%)	TOTAL REQ'D VENT @ AHU INLET (CFM)	TOTAL VENT PROVIDED @ AHU INLET (CFM)	EXHAUST RATE REQUIRED (CFM/SQ.FT.) OR NOMINAL AIRFLOW (CFM)	EXHAUST RATE PROVIDED (CFM/SQ.FT.) OR NOMINAL AIRFLOW (CFM)	REMARKS
			AREA (SQFT)	REQ'D VENT (CFM/SQFT)	REQ'D VENT (CFM)	PEOPLE	REQ'D VENT (CFM/PERSON)	DIVERSITY	REQ'D VENT (CFM)							
RTU-1	1ST FLOOR SHELL RETAIL SPACE - BASEMENT SPACE	SALES / RETAIL	11,124	0.12	1335	167	7.5	1.0	1251	2586	0.8	3232.9	3520	N/A	N/A	
N/A	WEST VESTIBULE	VESTIBULE	99	0.0	0	0	0.0	1.0	0	0	0.8	0.0	0.0	N/A	N/A	
N/A	SOUTH VESTIBULE	VESTIBULE	152	0.0	0	0	0.0	1.0	0	0	0.8	0.0	0.0	N/A	N/A	
AHU-1	1ST FLOOR SHELL RETAIL SPACE - REAR EXISTING ADDITION	SALES / RETAIL	1,973	0.12	237	30	7.5	1.0	222	459	0.8	573.4	575	N/A	N/A	
RTU-1	1ST FLOOR SHELL RETAIL SPACE - MAIN SPACE	SALES / RETAIL	9,147	0.12	1098	137	7.5	1.0	1029	2127	0.8	2658.3	3000	N/A	N/A	

REMARKS:
1. CALCULATIONS WERE PERFORMED BASED ON IMC-2021 SECTIONS 402 & 403 AND ASHRAE 62.1-2016.

AIR HANDLING UNIT & EXHAUST FAN VENTILATION TOTALS

AIR HANDLING UNIT / EXHAUST FAN	AREA SERVED	TOTAL REQ'D VENT @ AHU INLET (CFM)	TOTAL VENT PROVIDED @ AHU INLET (CFM)	EXHAUST RATE REQUIRED (CFM/SQ.FT.) OR NOMINAL AIRFLOW (CFM)	EXHAUST RATE PROVIDED (CFM/SQ.FT.) OR NOMINAL AIRFLOW (CFM)
RTU-1	1ST FLOOR SHELL RETAIL SPACE - BASEMENT SPACE	3232.9	3520.0	N/A	3250.0
	1ST FLOOR SHELL RETAIL SPACE - MAIN SPACE	2658.0	3000.0	N/A	2750.0
RTU-1 (TOTAL)		5890.9	6520.0	N/A	6000.0
AHU-1	1ST FLOOR SHELL RETAIL SPACE - REAR EXISTING ADDITION	573.0	575.0	N/A	N/A
RTU-1 (TOTAL)		573.0	575.0	N/A	N/A
EF-1	1ST FLOOR SHELL RETAIL SPACE - REAR EXISTING ADDITION	0.0	0.0	N/A	500.0
EF-1 (TOTAL)		0.0	0.0	N/A	500.0

AIR BALANCE SCHEDULE

AIR HANDLING UNIT	TOTAL PROVIDED VENT @ AHU INLET (CFM)	TOTAL PROVIDED VENT/EXHAUST (CFM)
AHU-1	575	--
RTU-1	6520	6000
EF-1	-	500
TOTAL	7095 CFM	6500 CFM

VILLAGE OF OAK PARK
CONSTRUCTION DOCUMENT(S)
REVIEWED FOR COMPLIANCE
KEEP A PRINTED APPROVED COPY OF THE PLANS ON SITE AT ALL TIMES FOR CONTRACTORS AND INSPECTORS

625 W Adams Street – 19th Floor
Chicago, IL 60661
312.320.3668

LICENSED PROFESSIONAL ENGINEER
ALEXANDER G. RADKOFF
062-073334
OF ILLINOIS

DESIGN FIRM LIC. NO: 184008703-002
DESIGN FIRM LIC. NO. EXP : 04.30.2027
ILLINOIS LICENCE NUMBER: 062.073334
LIC. EXP.: 11.30. 2025

1144 Lake Street, LLC

BASE BUILDING MECHANICAL RENOVATIONS

1144 W LAKE ST
OAK PARK, IL 60301

NO.	DESCRIPTION	DATE
1	PERMIT REVISION 1	09/19/2025
1	ISSUED FOR PERMIT	08/26/2025

JOB NO.: 25.068

SCALE: AS SHOWN

TITLE: MECHANICAL SCHEDULES

SHEET: M4.4

8/24/2025 4:52:45 PM

COM*check* Software Version COMcheckWeb

Mechanical Compliance Certificate

Project Information

Energy Code: 2021 IECC
Project Title: 1144 Lake Street White Box Renovation
Location: Oak Park, Illinois
Climate Zone: 5a
Project Type: Alteration

Construction Site:

Owner/Agent:
Nicholas Karris
Water Tower Realty Corporation
415 N LaSalle, Suite 700
Chicago, Illinois 60654
312-828-0320
nkarris@wtrm.com

Designer/Contractor:
Alexander Radkoff
Allen + Shariff Corporation
625 W Adams St - 19th Floor
Chicago, Illinois 60661
312-620-3668
aradkoff@allenshariff.com

1

Mechanical Systems List

Quantity System Type & Description

1 AHU-1 & CU-1 (Single Zone):
Cooling: 1 each - Split System, Capacity = 140 kBtu/h, Air-Cooled Condenser, Air Economizer
Proposed Efficiency = 11.00 EER, Required Efficiency = 11.00 EER
Proposed Part Load Efficiency = 15.40 IEER, Required Part Load Efficiency = 14.20 IEER
Fan System: AHU-1 Supply Fan -- Compliance (Brake HP and fan efficiency method) : Passes

Fans:
FAN 1 Supply, Constant Volume, 5025 CFM, 3.0 motor nameplate hp, 2.1 design brake hp (2.1 max. BHP), 1.03 fan energy index

1 RTU-1 (Single Zone):
Heating: 1 each - Central Furnace, Gas, Capacity = 462 kBtu/h
Proposed Efficiency = 81.00% Et, Required Efficiency: 81.00 % Et
Cooling: 1 each - Hydronic Coil, Capacity = 602 kBtu/h, Air Economizer
No minimum efficiency requirement applies
Fan System: RTU-1 -- Compliance (Brake HP and fan efficiency method) : Passes

Fans:
Return Fan 1 Return, Single-Zone VAV, 20150 CFM, 5.0 motor nameplate hp, 3.6 design brake hp (3.6 max. BHP), 1.00 fan energy index
Supply Fan 1 Supply, Single-Zone VAV, 10700 CFM, 20.0 motor nameplate hp, 14.2 design brake hp (14.2 max. BHP), 0.98 fan energy index
Supply Fan 2 Supply, Single-Zone VAV, 10700 CFM, 20.0 motor nameplate hp, 14.2 design brake hp (14.2 max. BHP), 0.98 fan energy index
Pressure Drop Credits:
Energy recover device, other than Coil Runaround Loop, 5.8434 credit
Return and/or exhaust airflow control devices, 2.5902 credit
Fully ducted return and/or exhaust air systems, 2.5902 credit
Particulate filtration credit: MERV 13 through 15, 4.6623 credit

1 EDH-1 (Unknown w/ PerimeterSystem):
Heating: 1 each - Unit Heater, Electric, Capacity = 175 kBtu/h
No minimum efficiency requirement applies

Mechanical Compliance Statement

Compliance Statement: The proposed mechanical alteration project represented in this document is consistent with the building plans, specifications, and other calculations submitted with this permit application. The proposed mechanical systems have been designed to meet the 2021 IECC requirements in COM*check* Version COMcheckWeb and to comply with any applicable mandatory requirements listed in the Inspection Checklist.

Name - Title	Signature	Date
Alexander Radkoff - Vice President	Alexander Radkoff (Digitally signed by Alexander Radkoff DN: cn=Alexander Radkoff, o=Allen + Shariff Corporation, ou=Allen + Shariff Corporation, email=aradkoff@allenshariff.com, c=US Date: 2025.09.22 20:36:26-05'00')	09/22/2025

1

Section # & Req.ID	Mechanical Rough-In Inspection	Complies?	Comments/Assumptions
C402.2.6 [ME41][3]	Thermally ineffective panel surfaces of sensible heating panels have insulation >= R-3.5.	☐Complies ☐Does Not ☐Not Observable ☐Not Applicable	**Exception:** Requirement does not apply.
C403.12.3 [ME61][2]	HVAC piping insulation insulated in accordance with Table C403.11.3. Insulation exposed to weather is protected from damage and is provided with shielding from solar radiation.	☐Complies ☐Does Not ☐Not Observable ☐Not Applicable	Requirement will be met.
C403.8.1 [ME65][1]	HVAC fan systems at design conditions do not exceed allowable fan system motor nameplate hp or fan system bhp.	☐Complies ☐Does Not ☐Not Observable ☐Not Applicable	Requirement will be met. *See the Mechanical Systems list for values.*
C403.8.2 [ME21][2]	HVAC fan motors not oversized beyond allowable limits.	☐Complies ☐Does Not ☐Not Observable ☐Not Applicable	Requirement will be met.
C403.8.3 [ME117][2]	Fans have a fan energy index (FEI) >= 1.00. Variable volume fans will have an FEI >= 0.95.	☐Complies ☐Does Not ☐Not Observable ☐Not Applicable	Requirement will be met.
C403.8.3 [ME117][2]	Fans have a fan energy index (FEI) >= 1.00. Variable volume fans will have an FEI >= 0.95.	☐Complies ☐Does Not ☐Not Observable ☐Not Applicable	Requirement will be met.
C403.8.4 [ME142][1]	Motors for fans that are not less than 1/12 hp and less than 1 hp are electronically commutated motors or have a minimum motor efficiency of 70 percent. These motors have the means to adjust motor speed.	☐Complies ☐Does Not ☐Not Observable ☐Not Applicable	Requirement will be met.
C403.8.6 [ME143][2]	Each DX cooling system > 65 kBtu and chiller water/evaporative cooling system with fans > 1/4 hp are designed to vary the indoor fan airflow as a function of load and comply with detailed requirements of this section.	☐Complies ☐Does Not ☐Not Observable ☐Not Applicable	Requirement will be met.
C403.9 [ME144][3]	Large diameter fans where installed shall be tested and labeled in accordance with AMCA 230.	☐Complies ☐Does Not ☐Not Observable ☐Not Applicable	**Exception:** Requirement does not apply.
C403.13.1 [ME71][2]	Systems that heat outside the building envelope are radiant heat systems controlled by an occupancy sensing device or timer switch.	☐Complies ☐Does Not ☐Not Observable ☐Not Applicable	**Exception:** Requirement does not apply.
C403.3 [ME55][2]	HVAC equipment efficiency verified.	☐Complies ☐Does Not ☐Not Observable ☐Not Applicable	*See the Mechanical Systems list for values.*
C403.5.5 [ME113][2]	Fault detection and diagnostics installed with air-cooled unitary DX units or VRF units having economizers.	☐Complies ☐Does Not ☐Not Observable ☐Not Applicable	Requirement will be met.

1 High Impact (Tier 1) 2 Medium Impact (Tier 2) 3 Low Impact (Tier 3)

COM*check* Software Version COMcheckWeb

Inspection Checklist

Energy Code: 2021 IECC

Requirements: 100.0% were addressed directly in the COM*check* software

Text in the "Comments/Assumptions" column is provided by the user in the COMcheck Requirements screen. For each requirement, the user certifies that a code requirement will be met and how that is documented, or that an exception is being claimed. Where compliance is itemized in a separate table, a reference to that table is provided.

Section # & Req.ID	Plan Review	Complies?	Comments/Assumptions
C103.2 [PR2][1]	Plans, specifications, and/or calculations provide all information with which compliance can be determined for the mechanical and service water heating systems and document where exceptions to the standard are claimed. Load calculations per acceptable engineering standards and handbooks. Hot water system sized per manufacturer's sizing guide.	☐Complies ☐Does Not ☐Not Observable ☐Not Applicable	Requirement will be met.

Additional Comments/Assumptions:

1 High Impact (Tier 1) 2 Medium Impact (Tier 2) 3 Low Impact (Tier 3)

Section # & Req.ID	Mechanical Rough-In Inspection	Complies?	Comments/Assumptions
C403.2.2 [ME59][1]	Natural or mechanical ventilation is provided in accordance with International Mechanical Code Chapter 4. Mechanical ventilation has capability to reduce outdoor air supply to minimum per IMC Chapter 4.	☐Complies ☐Does Not ☐Not Observable ☐Not Applicable	Requirement will be met.
C403.7.1 [ME59][1]	Demand control ventilation provided for spaces >500 ft2 and >15 people/1000 ft2 occupant density and served by systems with air side economizer, auto modulating outside air damper control, or design airflow >3,000 cfm.	☐Complies ☐Does Not ☐Not Observable ☐Not Applicable	**Exception:** Requirement does not apply.
C403.7.2 [ME115][3]	Enclosed parking garage ventilation has automatic contaminant detection and capacity to stage or modulate fans to 50% or less of design capacity.	☐Complies ☐Does Not ☐Not Observable ☐Not Applicable	**Exception:** Requirement does not apply.
C403.7.6 [ME141][3]	HVAC systems serving guestrooms in Group R-1 buildings with > 50 guestrooms: Each guestroom is provided with controls that automatically manage temperature setpoint and ventilation (see sections C403.7.6.1 and C403.7.6.2).	☐Complies ☐Does Not ☐Not Observable ☐Not Applicable	**Exception:** Requirement does not apply.
C403.7.4 [ME57][1]	Exhaust air energy recovery on systems meeting Table C403.7.4(1) and C403.7.4(2).	☐Complies ☐Does Not ☐Not Observable ☐Not Applicable	Requirement will be met.
C403.7.5 [ME116][3]	Kitchen exhaust systems comply with replacement air and conditioned supply air limitations, and satisfy hood rating requirements and maximum exhaust rate criteria.	☐Complies ☐Does Not ☐Not Observable ☐Not Applicable	**Exception:** Requirement does not apply.
C403.12.1, C403.12.2 [ME60][2]	HVAC ducts and plenums insulated in accordance with C403.11.1 and constructed in accordance with C403.11.2, verification may need to occur during Foundation Inspection.	☐Complies ☐Does Not ☐Not Observable ☐Not Applicable	Requirement will be met.
C403.5, C403.5.1, C403.5.2 [ME62][1]	Air economizers provided where required, meet the requirements for design capacity, control signal, ventilation controls, high-limit shut-off, integrated economizer control, and provide a means to relieve excess outside air during operation.	☐Complies ☐Does Not ☐Not Observable ☐Not Applicable	Requirement will be met.
C403.5.2 [ME16][1]	Economizer operation will not increase heating energy use during normal operation.	☐Complies ☐Does Not ☐Not Observable ☐Not Applicable	Requirement will be met.
C403.5.3.3 [ME124][1]	Air economizers automatically reduce outdoor air intake to the design minimum outdoor air quantity when outdoor air intake will not reduce cooling energy usage. See Table C403.5.3.3 for applicable device types and climate zones.	☐Complies ☐Does Not ☐Not Observable ☐Not Applicable	Requirement will be met.

1 High Impact (Tier 1) 2 Medium Impact (Tier 2) 3 Low Impact (Tier 3)

Section # & Req.ID	Plumbing Rough-In Inspection	Complies?	Comments/Assumptions
C404.5, C404.5.1, C404.5.2 [PL6][3]	Heated water supply piping conforms to pipe length and volume requirements. Refer to section details.	☐Complies ☐Does Not ☐Not Observable ☐Not Applicable	**Exception:** Requirement does not apply.

Additional Comments/Assumptions:

1 High Impact (Tier 1) 2 Medium Impact (Tier 2) 3 Low Impact (Tier 3)

Section # & Req.ID	Mechanical Rough-In Inspection	Complies?	Comments/Assumptions
C403.5.3.4 [ME125][1]	System capable of relieving excess outdoor air during air economizer operation to prevent over pressurizing the building. The relief air outlet located to avoid recirculation into the building.	☐Complies ☐Does Not ☐Not Observable ☐Not Applicable	Requirement will be met.
C403.5.3.5 [ME126][1]	Return, exhaust/relief and outdoor air dampers used in economizers have motorized dampers that automatically shut when not in use and meet maximum leakage rates. Reference section C403.7.7 for details.	☐Complies ☐Does Not ☐Not Observable ☐Not Applicable	Requirement will be met.
C403.4.3.1 [ME50][2]	Three-pipe hydronic systems using a common return for hot and chilled water are not used.	☐Complies ☐Does Not ☐Not Observable ☐Not Applicable	Requirement will be met.
C403.4.5 [ME26][3]	Chilled water plants with multiple chillers have capability to reduce flow automatically through the chiller plant when a chiller is shut down. Boiler plants with multiple boilers have the capability to reduce flow automatically through the boiler plant when a boiler is shut down.	☐Complies ☐Does Not ☐Not Observable ☐Not Applicable	Requirement will be met.
C403.4.1.4 [ME63][2]	Heating for vestibules and air curtains with integral heating include automatic controls that shut off the heating system when outdoor air temperatures > 45F. Vestibule heating and cooling systems controlled by a thermostat in the vestibule with heating setpoint <= 60F and cooling setpoint >= 80F.	☐Complies ☐Does Not ☐Not Observable ☐Not Applicable	Requirement will be met.
C403.10.5 [ME31][1]	Condenser heat recovery system that can heat water to 85 ºF or provide 60% of peak heat rejection is installed for preheating of service hot water.	☐Complies ☐Does Not ☐Not Observable ☐Not Applicable	Requirement will be met.
C403.3.3 [ME35][1]	Hot gas bypass limited to: <=240 kBtu/h – 50% >240 kBtu/h – 25%	☐Complies ☐Does Not ☐Not Observable ☐Not Applicable	Requirement will be met.
C408.2.2.1 [ME53][3]	Air outlets and zone terminal devices have means for air balancing.	☐Complies ☐Does Not ☐Not Observable ☐Not Applicable	Requirement will be met.
C408.2.2.2 [ME54][3]	HVAC hydronic heating and cooling coils have means to balance and have pressure test connections.	☐Complies ☐Does Not ☐Not Observable ☐Not Applicable	Requirement will be met.
C403.11.3.1, C403.11.3.1, C403.11.3.2 [ME123][3]	Refrigerated display cases, walk-in coolers or walk-in freezers served by remote compressors and remote condensers not located in a condensing unit, have fan-powered condensers that comply with Sections C403.11.3.1 and refrigeration compressor systems that comply with C403.11.3.2..	☐Complies ☐Does Not ☐Not Observable ☐Not Applicable	**Exception:** Requirement does not apply.

Additional Comments/Assumptions:

1 High Impact (Tier 1) 2 Medium Impact (Tier 2) 3 Low Impact (Tier 3)

VILLAGE OF OAK PARK
CONSTRUCTION DOCUMENT(S)
REVIEWED FOR COMPLIANCE
KEEP A PRINTED APPROVED COPY OF THE PLANS ON SITE AT ALL TIMES FOR CONTRACTORS AND INSPECTORS

625 W Adams Street – 19th Floor
Chicago, IL 60661
312.320.3668

LICENSED PROFESSIONAL ENGINEER
ALEXANDER G. RADKOFF
062-073334
OF ILLINOIS

DESIGN FIRM LIC. NO: 184008703-002
DESIGN FIRM LIC. NO. EXP.: 04.30.2027
ILLINOIS LICENCE NUMBER: 062.073334
LIC. EXP.: 11.30. 2025

1144 Lake Street, LLC

BASE BUILDING MECHANICAL RENOVATIONS

1144 W LAKE ST
OAK PARK, IL 60301

NO.	DESCRIPTION	DATE
1	PERMIT REVISION 1	09/19/2025
1	ISSUED FOR PERMIT	08/25/2025

JOB NO.: 25.068

SCALE: AS SHOWN

TITLE: MECHANICAL COMCHECK

SHEET: M5.1

8/24/2025 4:52:45 PM

Section # & Req.ID	Rough-In Electrical Inspection	Complies?	Comments/Assumptions
C405.7 [EL26][2]	Low-voltage dry-type distribution electric transformers meet the minimum efficiency requirements of Table C405.6.	☐Complies ☐Does Not ☐Not Observable ☐Not Applicable	**Exception:** Requirement does not apply.
C405.8 [EL27][2]	Electric motors meet the minimum efficiency requirements of Tables C405.7(1) through C405.7(4). Efficiency verified through certification under an approved certification program or the equipment efficiency ratings shall be provided by motor manufacturer (where certification programs do not exist).	☐Complies ☐Does Not ☐Not Observable ☐Not Applicable	Requirement will be met.
C405.9.1, C405.9.2 [EL28][2]	Escalators and moving walks comply with ASME A17.1/CSA B44 and have automatic controls configured to reduce speed to the minimum permitted speed in accordance with ASME A17.1/CSA B44 or applicable local code when not conveying passengers.	☐Complies ☐Does Not ☐Not Observable ☐Not Applicable	**Exception:** Requirement does not apply.
C405.10 [EL29][2]	Total voltage drop across the combination of feeders and branch circuits <= 5%.	☐Complies ☐Does Not ☐Not Observable ☐Not Applicable	Requirement will be met.
C405.1.1 [EL30][2]	At least 90% of dwelling unit permanently installed lighting shall have lamp efficacy >= 65 lm/W or luminaires with efficacy >= 45 lm/W or comply with C405.2.4 or C405.3.	☐Complies ☐Does Not ☐Not Observable ☐Not Applicable	**Exception:** Requirement does not apply.
C405.11, C405.11.1 [EL31][2]	50% of 15/20 amp receptacles installed in enclosed offices, conference rooms, copy rooms, break rooms, classrooms and workstations and > 25% of branch circuit feeders for modular furniture will have automatic receptacle control in accordance with C405.11.1.	☐Complies ☐Does Not ☐Not Observable ☐Not Applicable	**Exception:** Requirement does not apply.

Additional Comments/Assumptions:

1	High Impact (Tier 1)	2	Medium Impact (Tier 2)	3	Low Impact (Tier 3)

Section # & Req.ID	Final Inspection	Complies?	Comments/Assumptions
C303.3, C408.2.5.3 [FI8][3]	Furnished O&M manuals for HVAC systems within 90 days of system acceptance.	☐Complies ☐Does Not ☐Not Observable ☐Not Applicable	Requirement will be met.
C403.1.1 [FI50][1]	HVAC systems and equipment design loads calculated in accordance with ANSI/ASHRAE/ACCA Standard 183 or by an approved equivalent computational procedure	☐Complies ☐Does Not ☐Not Observable ☐Not Applicable	Requirement will be met.
C403.3.1 [FI27][3]	HVAC systems and equipment capacity does not exceed calculated loads.	☐Complies ☐Does Not ☐Not Observable ☐Not Applicable	Requirement will be met.
C403.4.1 [FI47][3]	Heating and cooling to each zone is controlled by a thermostat control. Minimum one humidity control device per installed humidification/dehumidification system.	☐Complies ☐Does Not ☐Not Observable ☐Not Applicable	Requirement will be met.
C403.4.1.2 [FI38][3]	Thermostatic controls have a 5 °F deadband.	☐Complies ☐Does Not ☐Not Observable ☐Not Applicable	Requirement will be met.
C403.4.1.3 [FI20][3]	Temperature controls have setpoint overlap restrictions.	☐Complies ☐Does Not ☐Not Observable ☐Not Applicable	Requirement will be met.
C403.4.2 [FI39][3]	Each zone equipped with setback controls using automatic time clock or programmable control system.	☐Complies ☐Does Not ☐Not Observable ☐Not Applicable	Requirement will be met.
C403.4.2.1, C403.4.2.2 [FI40][3]	Automatic Controls: Setback to 55°F (heat) and 85°F (cool); 7-day clock, 2-hour occupant override, 10-hour backup	☐Complies ☐Does Not ☐Not Observable ☐Not Applicable	Requirement will be met.
C403.4.2.3 [FI41][3]	Systems include optimum start controls.	☐Complies ☐Does Not ☐Not Observable ☐Not Applicable	Requirement will be met.
C408.1.1 [FI57][1]	Building operations and maintenance documents will be provided to the owner. Documents will cover manufacturers' information, specifications, programming procedures and means of illustrating to owner how building, equipment and systems are intended to be installed, maintained, and operated.	☐Complies ☐Does Not ☐Not Observable ☐Not Applicable	Requirement will be met.
C408.2.1 [FI28][1]	Commissioning plan developed by registered design professional or approved agency.	☐Complies ☐Does Not ☐Not Observable ☐Not Applicable	Requirement will be met.

1	High Impact (Tier 1)	2	Medium Impact (Tier 2)	3	Low Impact (Tier 3)

Section # & Req.ID	Final Inspection	Complies?	Comments/Assumptions
C408.2.3.1 [FI31][1]	HVAC equipment, systems and system-to-system relationships have been tested to ensure proper operation.	☐Complies ☐Does Not ☐Not Observable ☐Not Applicable	Requirement will be met.
C408.2.3.2 [FI10][1]	HVAC and service water heating control systems have been tested to ensure proper operation, calibration and adjustment of controls.	☐Complies ☐Does Not ☐Not Observable ☐Not Applicable	Requirement will be met.
C408.2.3.3 [FI32][1]	Economizers have been tested to ensure proper operation.	☐Complies ☐Does Not ☐Not Observable ☐Not Applicable	Requirement will be met.
C408.2.4 [FI29][1]	Preliminary commissioning report completed and certified by registered design professional or approved agency.	☐Complies ☐Does Not ☐Not Observable ☐Not Applicable	Requirement will be met.
C408.2.5 [FI7][1]	Furnished HVAC as-built drawings submitted within 90 days of system acceptance.	☐Complies ☐Does Not ☐Not Observable ☐Not Applicable	Requirement will be met.
C408.2.5.1 [FI43][1]	An air and/or hydronic system balancing report is provided for HVAC systems.	☐Complies ☐Does Not ☐Not Observable ☐Not Applicable	Requirement will be met.
C408.2.5.2 [FI30][1]	Final commissioning report due to building owner within 90 days of receipt of certificate of occupancy.	☐Complies ☐Does Not ☐Not Observable ☐Not Applicable	Requirement will be met.

Additional Comments/Assumptions:

1	High Impact (Tier 1)	2	Medium Impact (Tier 2)	3	Low Impact (Tier 3)

VILLAGE OF OAK PARK
CONSTRUCTION DOCUMENT(S)
REVIEWED FOR COMPLIANCE

KEEP A PRINTED APPROVED COPY OF THE PLANS ON SITE AT ALL TIMES FOR CONTRACTORS AND INSPECTORS

625 W Adams Street – 19th Floor
Chicago, IL 60661
312.320.3668

LICENSED PROFESSIONAL ENGINEER
ALEXANDER G. RADKOFF
062-073334
OF ILLINOIS

DESIGN FIRM LIC. NO: 184008703-002
DESIGN FIRM LIC. NO. EXP.: 04.30.2027
ILLINOIS LICENCE NUMBER: 062.073334
LIC. EXP.: 11.30. 2025

1144 Lake Street, LLC

BASE BUILDING MECHANICAL RENOVATIONS

1144 W LAKE ST
OAK PARK, IL 60301

NO.	DESCRIPTION	DATE
1	PERMIT REVISION 1	09/19/2025
1	ISSUED FOR PERMIT	08/25/2025

JOB NO.: 25.068

SCALE: AS SHOWN

TITLE: MECHANICAL COMCHECK

SHEET: M5.2

8/24/2025 4:52:45 PM

PLUMBING LEGEND

SYMBOL	ABRV.	DESCRIPTION	SYMBOL	ABRV.	DESCRIPTION
EX (X)	EX	EXISTING PIPING TO REMAIN - (X) DESIGNATES SERVICE			CONNECTION POINT, NEW TO EXISTING
RX (X)	RX	EXISTING PIPING TO BE REMOVED - (X) DESIGNATES SERVICE			DISCONNECTION POINT
		PIPING ROUTED BELOW GRADE / SLAB (LINE TYPE INDICATES SERVICE TYPE UNO)	1		DRAWING KEYNOTE
SAN	SAN	SANITARY PIPING	A		DEMOLITION DRAWING KEYNOTE
GW	GW	GREASE WASTE PIPING (TO GREASE INTERCEPTOR)	1		REVISION NUMBER
OW	OW	OIL WASTE PIPING			REVISION CLOUD
ST	ST	STORM PIPING (PRIMARY)			PIPE UP
OST	OST	SECONDARY / OVERFLOW DRAIN PIPING			PIPE DOWN
V	V	VENT PIPING			PIPE TEE DOWN
CW	CW	DOMESTIC COLD WATER PIPING			TOP PIPE CONNECTION
HW	HW	DOMESTIC HOT WATER PIPING			BALL VALVE OR SHUTOFF VALVE IN RISE
HWR	HWR	DOMESTIC HOT WATER RETURN PIPING			PIPE CAP
DIS	DIS	DEIONIZED WATER SUPPLY PIPING			PIPE UNION
DIR	DIR	DEIONIZED WATER RETURN PIPING			FLANGED CONNECTION
TP	TP	TRAP PRIMER PIPING			CONCENTRIC PIPE REDUCER
G	G	GAS PIPING (NATURAL OR PROPANE)			ECCENTRIC PIPE REDUCER
FO	FO	FUEL OIL PIPING			FLOW ARROW
CD	CD	CONDENSATE DRAIN PIPING			PIPE ANCHOR
PD	PD	PUMP DISCHARGE			PIPE GUIDE
MV	MV	MEDICAL VACUUM PIPING		BV	BALL VALVE
MA	MA	MEDICAL AIR PIPING		BFV	BUTTERFLY VALVE
LV	LV	LABORATORY VACUUM PIPING		PV	PLUG VALVE
LA	LA	LABORATORY AIR PIPING		GV	GATE VALVE
PV	PV	PROCESS AIR VACUUM PIPING		GBV	GLOBE VALVE
PA	PA	PROCESS AIR PIPING		PRV	PRESSURE REDUCING VALVE
OXY	OXY	OXYGEN PIPING		CV	CHECK VALVE
HEX	HEX	HELIX PIPING		BFP	BACK FLOW PREVENTER
N	N	NITROGEN PIPING			PRESSURE RELIEF VALVE
CA	CA	COMPRESSED AIR PIPING			AUTOMATIC FLOW CONTROL VALVE
AV	AV	ACID VENT PIPING			CALIBRATED BALANCING VALVE
AW	AW	ACID WASTE PIPING			AUTOMATIC AIR VENT
CO2	CO2	CARBON DIOXIDE PIPING			MANUAL AIR VENT
MAI	MAI	MEDICAL AIR INTAKE PIPING			P/T PLUG
MVD	MVD	MEDICAL VACUUM DISCHARGE PIPING		PG	PRESSURE GAUGE W/ SHUT-OFF
NO	NO	NITROUS OXIDE PIPING			THERMOMETER
WAGD	WAGD	WASTE ANESTHETIC GAS DISCHARGE			STRAINER
X		MEDICAL GAS OUTLET (LETTER DESIGNATES GAS TYPE)		T&P	TEMPERATURE AND PRESSURE RELIEF VALVE
M		UTILITY METER		MV	MIXING VALVE
		HOT WATER RECIRC. PUMP			EXTERNAL WALL HYDRANT
X		DOMESTIC SHOCK ABSORBER/WATER HAMMER ARRESTER; TEXT DENOTES SIZE (PDI: A - F)		FCO	CLEAN OUT, FLOOR
		GAS SOLENOID VALVE		CO	CLEAN OUT, EXPOSED
		GAS COCK		FD	FLOOR DRAIN
		AQUASTAT		RD	ROOF DRAIN
		VACUUM RELIEF VALVE			PIPE TRAP
	VB	VACUUM BREAKER			FLOOR DRAIN WITH TRAP PRIMER
		HOSE BIBB			FLOOR SINK/RECEPTOR WITH HALF GRATE
		FLEXIBLE PIPE CONNECTION		OS&Y	OS&Y VALVE
I.E. XX.XX		INVERT ELEVATION B.F.F. (IN FEET)		TS	OS&Y VALVE WITH TAMPER SWITCH
XX		KITCHEN EQUIPMENT DESIGNATION; REFER TO KITCHEN EQUIPMENT DRAWINGS FOR DETAILS			

NOTES:

1. NOT ALL SYMBOLS AND ABBREVIATIONS ARE IN USE FOR THIS PROJECT.

VILLAGE OF OAK PARK
CONSTRUCTION DOCUMENT(S)
REVIEWED FOR COMPLIANCE

KEEP A PRINTED APPROVED COPY OF THE PLANS ON SITE AT ALL TIMES FOR CONTRACTORS AND INSPECTORS

625 W Adams Street – 19th Floor
Chicago, IL 60661
312.320.3668

LICENSED PROFESSIONAL ENGINEER
ALEXANDER G. RADKOFF
062-073334
OF ILLINOIS

DESIGN FIRM LIC. NO: 184008703-002
DESIGN FIRM LIC. NO. EXP.: 04.30.2027
ILLINOIS LICENCE NUMBER: 062.073334
LIC. EXP.: 11.30. 2025

1144 Lake Street, LLC

BASE BUILDING MECHANICAL RENOVATIONS

1144 W LAKE ST
OAK PARK, IL 60301

NO.	DESCRIPTION	DATE
1	PERMIT REVISION 1	09/19/2025
	ISSUED FOR PERMIT	08/25/2025

JOB NO.: 25.068

SCALE: AS SHOWN

TITLE: PLUMBING DATA SHEET

SHEET: P0.1

8/24/2025 4:52:45 PM

PLUMBING SPECIFICATIONS

PLUMBING GENERAL CONDITIONS (220100)

A. GENERAL

1. CONFORM TO ALL GENERAL AND SPECIAL CONDITIONS OF CONTRACT AS SPECIFIED BY ARCHITECT AND/OR OWNER.
2. PRODUCTS AND INSTALLATION SHALL COMPLY WITH ALL APPLICABLE LAWS, CODES, GOVERNMENT REGULATIONS, UTILITY COMPANY REQUIREMENTS, ETC. OF ALL AUTHORITIES HAVING JURISDICTION. WORK SHALL COMPLY WITH THE FOLLOWING CODES, STANDARDS AND ORGANIZATIONS:

2021 INTERNATIONAL BUILDING CODE (IBC) WITH OAK PARK LOCAL AMENDMENTS
2021 INTERNATIONAL EXISTING BUILDING CODE (IEBC) WITH OAK PARK LOCAL AMENDMENTS
1 ~~2021 INTERNATIONAL MECHANICAL CODE (IMC) WITH OAK PARK LOCAL AMENDMENTS~~
2014 STATE OF ILLINOIS PLUMBING CODE (ILPC) WITH OAK PARK LOCAL AMENDMENTS
2018 INTERNATIONAL PLUMBING CODE (IPC) WITH OAK PARK LOCAL AMENDMENTS (IPC CHAPTER 11)
1 ~~2021 INTERNATIONAL FUEL GAS CODE (IGC) WITH OAK PARK LOCAL AMENDMENTS~~
2021 INTERNATIONAL ENERGY CONSERVATION CODE (IECC) WITH STATE OF ILLINOIS AMENDEMENTS
2020 NATIONAL ELECTRIC CODE (NEC) WITH OAK PARK LOCAL AMENDMENTS
NFPA
UNDERWRITERS LABORATORY (UL), IRI, FM
SMACNA "HVAC DUCT CONSTRUCTION STANDARDS" GUIDELINES, DETAILS, & MODEL SPECIFICATION"
ASHRAE

3. WHERE CONFLICTS EXIST BETWEEN CODES, STANDARDS OR THIS SPECIFICATION THE HIGHER REQUIREMENT SHALL APPLY. DEVIATIONS FROM THE CONTRACT DOCUMENTS REQUIRED BY THE ABOVE AUTHORITIES SHALL BE SUBMITTED TO THE ENGINEER FOR REVIEW. OBTAIN PERMITS AND PAY ALL FEES. ARRANGE FOR ALL REQUIRED INSPECTIONS AND APPROVALS. CONFIRM ALL UTILITY COMPANY REQUIREMENTS AND CONNECTION POINTS IN FIELD, PRIOR TO STARTING WORK.
4. ALL SPECIFICATIONS AND DRAWINGS, I.E., ARCHITECTURAL, MECHANICAL, PLUMBING, AND ELECTRICAL ARE COMPLIMENTARY AND MUST BE USED IN COMBINATION TO OBTAIN COMPLETE CONSTRUCTION INFORMATION. ANY INFORMATION CONFLICTS WITHIN THE SPECIFICATIONS AND DRAWINGS SHALL BE BROUGHT TO THE ENGINEER'S ATTENTION. DRAWINGS ARE DIAGRAMMATIC. CONFIRM ALL DIMENSIONS BY FIELD MEASUREMENT. THE EXACT LOCATIONS FOR APPARATUS, FIXTURES, EQUIPMENT AND PIPING WHICH IS NOT COVERED BY DRAWINGS, SHALL BE OBTAINED FROM THE ARCHITECT OR HIS REPRESENTATIVE IN THE FIELD, AND THE WORK SHALL BE LAID OUT ACCORDINGLY.
5. EACH CONTRACTOR SHALL PROVIDE FOR HIS OWN CLEAN-UP, REMOVAL AND LEGAL DISPOSAL OF ALL RUBBISH DAILY. CONTRACTOR SHALL PROTECT THEIR WORK AND EXISTING OR ADJACENT PROPERTY AGAINST WEATHER, TO MAINTAIN THEIR WORK, MATERIALS, APPARATUS AND FIXTURES FREE FROM INJURY OR DAMAGE. ANY WORK DAMAGED BY FAILURE TO PROVIDE PROTECTION REQUIRED, SHALL BE REMOVED AND REPLACED WITH NEW WORK AT THE CONTRACTOR'S EXPENSE.
6. THE CONTRACTOR SHALL BE SOLELY RESPONSIBLE FOR CONSTRUCTION MEANS, METHODS, SEQUENCES OF CONSTRUCTION AND THE SAFETY OF WORKERS.
7. NO MEP, IT, FP SYSTEMS OR COMPONENTS SHALL BE INSTALLED OR ROUTED ABOVE ELECTRICAL PANELS AND EQUIPMENT OR THROUGH ELEVATOR ROOMS, FIRE PUMP ROOMS, OR STAIR TOWERS UNLESS SERVING THE MACHINE ROOM, FIRE PUMP ROOM OR STAIR TOWER.
8. THE CONTRACTOR SHALL COORDINATE AND OBTAIN A WRITTEN LISTING OF ELECTRICAL CHARACTERISTICS OF ALL MECHANICAL EQUIPMENT FROM THE ELECTRICAL CONTRACTOR PRIOR TO THE ORDERING OF EQUIPMENT. NO ADDITIONAL PAYMENT WILL BE MADE FOR LACK OF CONTRACTOR COORDINATION OF ELECTRICAL CHARACTERISTICS.
9. IN CASES OF DOUBT AS TO THE WORK INTENDED, OR IN THE EVENT OF NEED FOR EXPLANATION THEREOF, THE CONTRACTOR SHALL REQUEST SUPPLEMENTARY INSTRUCTIONS FROM THE ENGINEER. NO CHANGES ARE TO BE MADE TO THE WORK OF THIS CONTRACT WITHOUT PRIOR KNOWLEDGE AND APPROVAL OF THE ENGINEER. THE CONTRACTOR SHALL HOLD THE OWNER AND ITS CONSULTANTS HARMLESS AGAINST ALL CLAIMS AND JUDGMENTS ARISING OUT OF THE CONTRACTOR'S PERFORMANCE OF THE WORK OF THIS CONTRACT. THE CONTRACTOR SHALL NOT PROCEED WITH ANY WORK, WHICH HE EXPECTS ADDITIONAL COMPENSATION BEYOND THE CONTRACT AMOUNT, WITHOUT WRITTEN AUTHORIZATION FROM THE APPROPRIATE AUTHORITY. FAILURE TO OBTAIN SUCH AUTHORIZATION SHALL INVALIDATE ANY CLAIM FOR EXTRA COMPENSATION.
10. IT SHALL BE THE RESPONSIBILITY OF THIS CONTRACTOR TO INSTALL THE HEATING, VENTILATION AND AIR CONDITIONING SYSTEM SO AS TO INSURE QUIET OPERATION. NO VIBRATION OR SOUND SHALL BE TRANSMITTED TO THE BUILDING, STRUCTURE OR OCCUPIED AREAS. THE DECISION OF THE ENGINEER AS TO THE QUIETNESS OF THE SYSTEM AND EQUIPMENT SHALL BE FINAL. IT SHALL BE THIS CONTRACTORS' RESPONSIBILITY TO CORRECT OR REPLACE ANY NOISY SYSTEM OR EQUIPMENT AS REQUIRED.
11. OBTAIN PERMITS AND PAY ALL FEES. ARRANGE FOR ALL REQUIRED INSPECTIONS AND APPROVALS.

B. WORK IN EXISTING BUILDINGS (DIVISION 02)

1. THE EXISTING BUILDING IS TO REMAIN OCCUPIED AND ACCESSIBLE AT ALL TIMES. PROTECT THE BUILDING PREMISES AND ALL OCCUPANTS ON THE PROJECT SITE. THE CONTRACTOR IS RESPONSIBLE FOR ALL DAMAGES CAUSED BY IMPROPER PROTECTION AND SHALL MAKE ALL NECESSARY REPLACEMENTS OR REPAIRS WITHOUT ANY ADDITIONAL COST. MAKE ALL ARRANGEMENTS, MAINTAIN AND PAY ALL COSTS FOR TEMPORARY WATER, PLUMBING, POWER, LIGHTING, AND HEATING OR VENTILATION AS REQUIRED TO PROPERLY CONDUCT THE WORK OF THIS CONTRACT AND MAINTAIN SERVICES. PROVIDE AND MAINTAIN FOR THE ENTIRE LENGTH OF THIS CONTRACT ALL EXITS, EXIT LIGHTING, FIRE PROTECTION DEVICES AND ALARMS TO CONFORM TO LOCAL BUILDING CODE REQUIREMENTS.
2. CONFORM WITH THE CURRENT EDITION OF THE SMACNA "IAQ GUIDELINES FOR OCCUPIED BUILDINGS UNDER CONSTRUCTION."
3. CONTRACTOR SHALL VERIFY ALL POINTS OF CONNECTION BEFORE COMMENCING WORK. CONTRACTOR SHALL COORDINATE WORK WITH EXISTING WORK AND OTHER TRADES. ALL UNUSED EQUIPMENT SERVING THIS AREA SHALL BE REMOVED AND RETURNED TO THE OWNER.
4. EXISTING EQUIPMENT TO REMAIN, BE REUSED, OR RELOCATED WITHIN OR SERVING THE SPACE, WHICH IS DAMAGED OR DOES NOT COMPLY WITH THE SPECIFICATIONS, SHALL BE RESTORED TO LIKE NEW CONDITION SUBJECT TO REVIEW BY THE ARCHITECT AND ENGINEER, OR SHALL BE REPLACED WITH NEW MATERIALS MEETING THE SPECIFICATION REQUIREMENTS.
5. SOME WORK SHOWN MAY REQUIRE PREMIUM TIME INCLUDING NOISE PRODUCING ACTIVITIES, ACCESS INTO ADJOINING SPACES & ACTIVITIES DISRUPTING MEP SERVICES. CONFIRM THE REQUIREMENTS FOR PREMIUM TIME OR SPECIAL PROCEDURES WITH THE OWNER/LANDLORD AND INCLUDE THE COST IN BID PROPOSAL. WORK RELATED TO THE EXISTING BUILDING SHALL BE COORDINATED TO MINIMIZE INTERFERENCE OR INTERRUPTION OF NORMAL BUILDING USE BY OWNER. REFER TO ARCHITECTURAL PLANS FOR ANY PHASING REQUIREMENTS. ARRANGE FOR AND OBTAIN OWNER'S PERMISSION FOR ANY SERVICE SHUTDOWNS.
6. THE CONTRACTOR, BY SUBMITTING HIS BID PROPOSAL AGREES TO ACCEPT ALL EXISTING SITE CONDITIONS NOT SPECIFICALLY EXCEPTED. ALL EXCEPTIONS SHALL BE PROVIDED IN WRITING TO THE ARCHITECT AND ENGINEER.
7. PERFORM ROUTINE SERVICE INSPECTION OF ALL EXISTING HVAC UNITS TO BE REUSED FOR THIS PROJECT. LUBRICATE BEARINGS, SERVICE CONTROL SYSTEMS, REPLACE FAN BELTS AND INSTALL NEW FILTERS IN EACH UNIT. FIELD VERIFY REFRIGERANT CHARGE AND NOTIFY THE OWNER IF THE CHARGE IS LESS THAN THE MANUFACTURER'S SPECIFICATIONS. SUBMIT SERVICE REPORT TO OWNER/TENANT INDICATING CONDITION OF UNIT AND REPORT ANY MAJOR COMPONENT FAILURES OR MALFUNCTIONS. REPORT SHALL INCLUDE COST TO SERVICE ALL ITEMS ABOVE AND BEYOND THE ITEMS LISTED ABOVE. COST SHALL INCLUDE PARTS AND LABOR. EQUIPMENT SHALL BE PLACED IN FULL OPERATION WITH CONTROLS CALIBRATED UPON COMPLETION OF PROJECT.

C. DEMOLITION (024119)

1. DISCONNECT, DISASSEMBLE, CAP, PLUG AND REMOVE ALL MEP ELEMENTS (PIPING, DUCTS, ELECTRICAL DEVICES, WIRING, CONDUIT, EQUIPMENT, HANGERS, SUPPORTS, ETC.) INDICATED ON THE DRAWINGS OR NOT OTHERWISE REQUIRED FOR COMPLETED PRODUCT. NO MEP ELEMENTS ARE TO BE ABANDONED IN PLACE UNLESS SPECIFICALLY NOTED. NOT ALL ITEMS TO BE REMOVED ARE INDICATED ON DRAWING.
2. ALL OPENINGS ON PIPING AND DUCTS THAT REMAIN SHALL BE CAPPED AND PROPERLY SECURED. WIRING SHALL BE DISCONNECTED AT CIRCUIT BREAKERS AND REMOVED AND BREAKERS MARKED "SPARE." REMOVE AND RECLAIM ANY REFRIGERANT IN EXISTING SYSTEMS PRIOR TO DEMOLITION OF ANY EQUIPMENT ACCORDING TO FEDERAL REQUIREMENT.
3. ANY EQUIPMENT DESIGNATED BY OWNER TO BE SALVAGED SHALL BE PROTECTED AND DELIVERED TO AN OWNER DESIGNATED AREA ON SITE.
4. ALL ASBESTOS REMOVAL (IF REQUIRED) WILL BE HANDLED BY THE OWNER AND IS NOT A PART OF THIS WORK. IF MATERIALS SUSPECTED OF CONTAINING HAZARDOUS MATERIALS ARE ENCOUNTERED, DO NOT DISTURB; NOTIFY ARCHITECT AND OWNER IMMEDIATELY.

D. BASIS OF DESIGN AND SUBSTITUTIONS (012300)

1. WHEREVER THE WORDS "APPROVED BY", "APPROVED EQUAL", "AS DIRECTED" OR SIMILAR PHRASES ARE USED IN THE FOLLOWING SPECIFICATIONS, THEY SHALL BE UNDERSTOOD TO REFER TO THE OWNER AS THE APPROVING AGENCY. THE NAME OR MAKE OF ANY EQUIPMENT OR MATERIALS NAMED IN THE SPECIFICATION (WHETHER OR NOT THE WORDS "OR APPROVED EQUAL" ARE USED) SHALL BE KNOWN AS THE "STANDARD".

E. SUBMITTAL PROCEDURES (013300)

1. SUBMIT SHOP DRAWINGS FOR MECHANICAL EQUIPMENT, FIRE PROTECTION SYSTEMS, DUCTWORK, AND PLUMBING FIXTURES AND EQUIPMENT WITH ADEQUATE DETAILS AND SCALES TO CLEARLY SHOW CONSTRUCTION. INDICATE THE OPERATING CHARACTERISTICS FOR EACH REQUIRED ITEM. CLEARLY IDENTIFY EACH ITEM ON THE SUBMITTAL AS TO MARK, LOCATION AND USE, USING SAME IDENTIFICATION AS PROVIDED ON DESIGN DRAWINGS. SHOP DRAWINGS TO BE SUBMITTED INCLUDE BUT NOT LIMITED TO:
   a. FIXTURES
   b. VALVES & PIPING
   c. ALL EQUIPMENT
2. CONTRACTOR SHALL REVIEW AND INDICATE HIS APPROVAL OF EACH SHOP DRAWING PRIOR TO SUBMITTAL FOR REVIEW. DO NOT START WORK OR FABRICATION UNTIL SHOP DRAWINGS HAVE BEEN REVIEWED BY THE ENGINEER AND RETURNED TO THE CONTRACTOR.
3. SUBMITTALS WILL BE REVIEWED ONLY FOR GENERAL COMPLIANCE WITH THE CONTRACT DOCUMENTS AND NOT FOR DIMENSIONS OR QUANTITIES. THE SUBMITTAL REVIEW SHALL NOT RELIEVE THE CONTRACTOR OF RESPONSIBILITY FOR PURCHASE OF ANY ITEM IN FULL COMPLIANCE WITH THE CONTRACT DOCUMENTS OR ITS COMPLETE AND PROPER INSTALLATION.
4. WHERE SUBMITTALS VARY FROM THE CONTRACT REQUIREMENTS, THE CONTRACTOR SHALL CLEARLY INDICATE THE NATURE AND REASON FOR VARIATIONS ON SUBMITTAL OR ACCOMPANYING DOCUMENTS.
5. EACH MANUFACTURER OR HIS REPRESENTATIVE MUST CHECK THE APPLICATION OF HIS EQUIPMENT AND CERTIFY AT TIME OF SHOP DRAWING SUBMITTAL THAT EQUIPMENT HAS BEEN PROPERLY APPLIED AND CAN BE INSTALLED, SERVICED AND MAINTAINED WHERE INDICATED ON DRAWINGS. ADVISE ENGINEER IN WRITING WITH SUBMITTAL DRAWINGS OF ANY POTENTIAL PROBLEMS. THE MANUFACTURER SHALL BE RESPONSIBLE FOR ANY CHANGES THAT MIGHT BE NECESSARY BECAUSE OF PHYSICAL CHARACTERISTICS OF EQUIPMENT THAT HAVE NOT BEEN CALLED TO THE ENGINEER'S ATTENTION AT THE TIME OF SUBMITTAL.

F. CUTTING, PATCHING AND DRILLING (017329)

1. ALL CUTTING AND PATCHING OF THE BUILDING CONSTRUCTION REQUIRED FOR THIS WORK SHALL BE BY THIS CONTRACTOR UNLESS SHOWN ON ARCHITECTURAL DRAWINGS AND CONFIRMED AS TO SIZE AND LOCATION PRIOR TO NEW CONSTRUCTION. CUTTING SHALL BE IN A NEAT AND WORKMANLIKE MANNER. NEATLY SAW CUT ALL RECTANGULAR OPENINGS, SET SLEEVE THROUGH OPEN ING, AND FINISH PATCH OR PROVIDE TRIM FLANGE AROUND OPENING. CORE DRILL AND SLEEVE ALL ROUND OPENINGS. DO NOT CUT ANY STRUCTURAL COMPONENTS WITHOUT THE ARCHITECT'S APPROVAL.
2. PATCH AND FINISH TO MATCH ADJACENT AREAS THAT HAVE BEEN CUT, DAMAGED OR MODIFIED AS A RESULT OF THE INSTALLATION OF MECHANICAL OR ELECTRICAL EQUIPMENT. FIRE STOP ALL PENETRATIONS OF FIRE RATED CONSTRUCTION IN A CODE APPROVED MANNER.
3. ALL CONTRACTORS SHALL CONFIRM WITH OWNER, PRIOR TO BID, TIMES AVAILABLE FOR NOISE PRODUCING WORK SUCH AS CUTTING AND CORE DRILLING OF FLOORS, WALLS, ETC., AS WELL AS TIMES FOR WORK WHICH REQUIRE ACCESS INTO ADJOINING TENANT SPACES. INCLUDE ANY PREMIUM TIME IN BID.
4. THE EXACT LOCATION OF ROOFTOP EQUIPMENT SHALL BE APPROVED BY OWNER'S STRUCTURAL ENGINEER.
5. INFORMATION REGARDING REQUIRED PIPE OPENINGS IN WALLS, FLOORS, CHASES, ETC., AND CONCRETE EQUIPMENT PADS OR FOUNDATIONS SHALL BE GIVEN TO THE GENERAL CONTRACTOR BY THIS CONTRACTOR PRIOR TO THE CONSTRUCTION PERIOD. IF THIS CONTRACTOR FAILS TO COMPLY WITH THIS REQUEST, OR IF INCORRECT INFORMATION IS GIVEN, THE NECESSARY CUTTING AND PATCHING WILL BE PERFORMED BY THE GENERAL CONTRACTOR, AT THIS CONTRACTOR'S EXPENSE.

G. FIRESTOPPING (017329)

1. ALL SERVICES THAT PASS THRU FIRE OR SMOKE RATED PARTITIONS, WALLS, FLOORS, SHALL BE FIRESTOPPED. FIRE STOPPING RATING SHALL MATCH PARTITION RATING. ALL FIRE STOPPING SYSTEM SHALL MEET THE REQUIREMENTS OF ASTM E 814,UL 1479, AND BE FACTORY MUTUAL APPROVED.
2. ALL FIRESTOPPING AND/OR SMOKE STOPPING MATERIAL AND INSTALLATION SHALL BE AS MANUFACTURED BY HILTI OR APPROVED EQUAL.

H. ACCESS DOORS & PANELS (083113)

1. ACCESS DOORS SHALL BE PROVIDED IN WALLS AND CEILINGS WHERE REQUIRED TO PERMIT PROPER ACCESS TO VALVES AND ANY OTHER SUCH DEVICES WHICH REQUIRE MAINTENANCE OR SERVICE. DOORS PLACED IN WALLS, PARTITIONS OR OTHER FIRE-RATED CONSTRUCTION SHALL HAVE A LABEL SIGNIFYING THAT THE DOOR HAS THE SAME FIRE RATING AS THE FIRE-RATED CONSTRUCTION.
2. THIS CONTRACTOR SHALL FURNISH ACCESS PANELS TO THE GENERAL CONTRACTOR FOR INSTALLATION.
3. ACCESS PANELS SHALL BE CONSTRUCTED OF 14 GAUGE STEEL, WITH 16 GAUGE STEEL FRAMES. DOORS SHALL FINISH FLUSH WITH THE SURROUNDING SURFACE.
4. FRAMES SHALL HAVE 3-INCH-WIDE EXPANDED METAL FOR PLASTERED SURFACES AND PLAIN FLANGED TYPE FRAME FOR TILE, MASONRY OR GYPSUM BOARD SURFACES. DOORS AND FRAMES SHALL BE FURNISHED PRIME COATED. DOORS INSTALLED IN CERAMIC TILE OR OTHER NON-PAINTED SURFACES SHALL BE STAINLESS STEEL. HINGES SHALL BE CONCEALED SPRING TYPE, TO ALLOW DOORS TO BE OPENED 175 DEGREES. LOCKS SHALL BE FLUSH SCREWDRIVER TYPE WITH STEEL CAMS. ACCESS PANELS SHALL BE 16 INCHES BY 16 INCHES OR LARGER AS MAY BE REQUIRED FOR PROPER ACCESS TO THE DEVICE BEING SERVED.
5. ACCESS PANELS ARE NOT REQUIRED IN COMPLETELY ACCESSIBLE LIFT-OUT-TILE CEILINGS. CONTRACTOR SHALL REVIEW THE ROOM FINISH SCHEDULE ON THE ARCHITECTURAL DRAWINGS IN ORDER TO VERIFY THE NEED FOR ACCESS PANEL

I. EXCAVATION AND BACKFILL (312000)

1. PERFORM EXCAVATION AND BACKFILL REQUIRED FOR INSTALLATION OF PIPING.
2. EXCAVATE TO DEPTH REQUIRED TO INSTALL PIPING AT THE REQUIRED LEVEL AND PITCH. PIPE SHALL BE INSTALLED ON SAND BEDDING TO GIVE UNIFORM BEARING ALONG LENGTH OF PIPE (SAND INSIDE BUILDING AND INTERLOCKING AGGREGATE OUTSIDE BUILDING).
3. BACKFILL WITH BEDDING MATERIAL TO A MINIMUM OF TWELVE (12) INCHES ABOVE TOP OF PIPES AND COMPACT. BALANCE OF BACKFILL IN GRASS AREAS SHALL BE CLEAN EARTH UP TO SIX (6) INCHES ABOVE SURROUNDING GRADES, UNDER FLOORS SAND, AND UNDER PAVING INTERLOCKING AGGREGATE. BACKFILL SHALL BE COMPACTED IN MAXIMUM SIX (6) INCH LAYERS.
4. OTHER EXCAVATIONS SHALL BE BACKFILLED WITH CLEAN EARTH, EXCLUDING RUBBISH AND BOULDERS AND THE DIRT SHALL BE PROPERLY COMPACTED.
5. PATCH FLOOR TO MATCH EXISTING.

J. PAINTING (099113 AND 099123)

1. IN FINISHED SPACES, PAINTING OF ALL MECHANICAL EQUIPMENT, APPARATUS, AND PIPING SHALL BE DONE BY THE PAINTING TRADE UNDER THE GENERAL CONTRACTOR SPECIFICATION, EXCEPT WHERE SPECIFIED TO BE DONE BY THE MECHANICAL CONTRACTOR.

K. RECORD DRAWINGS (017839)

1. EACH CONTRACTOR OR SUBCONTRACTOR SHALL KEEP ONE (1) COMPLETE SET OF THE CONTRACT WORKING DRAWINGS ON THE JOB SITE ON WHICH HE SHALL REGULARLY RECORD ANY DEVIATIONS OR CHANGES FROM SUCH CONTRACT DRAWINGS MADE DURING CONSTRUCTION.
2. THESE DRAWINGS SHALL RECORD THE LOCATION OF ALL CONCEALED EQUIPMENT, PIPING, ELECTRIC SERVICE, SEWERS, WASTES, VENTS, DUCTS, CONDUIT AND OTHER PIPING, BY MEASURED DIMENSIONS TO EACH SUCH ITEM FROM READILY IDENTIFIABLE AND ACCESSIBLE WALLS OR CORNERS OF THE BUILDING. PLANS ALSO SHALL SHOW INVERT ELEVATION OF SEWERS AND TOP ELEVATION OF ALL OTHER BELOW-GRADE LINES.
3. RECORD DRAWINGS SHALL BE KEPT CLEAN AND UNDAMAGED AND SHALL NOT BE USED FOR ANY PURPOSE OTHER THAN RECORDING DEVIATIONS FROM WORKING DRAWINGS AND EXACT LOCATIONS OF CONCEALED WORK.
4. AFTER THE PROJECT IS COMPLETED, THESE SETS OF DRAWINGS SHALL BE DELIVERED TO THE ARCHITECT IN GOOD CONDITION, AS A PERMANENT RECORD OF THE INSTALLATION AS ACTUALLY CONSTRUCTED.

L. WARRANTY (017700)

1. FULLY WARRANT ALL MATERIALS, EQUIPMENT AND WORKMANSHIP FOR ONE (1) YEAR FROM DATE OF ACCEPTANCE. EXTEND ALL MANUFACTURER'S WARRANTIES TO THE OWNER, INCLUDING ALL EXTENDED WARRANTIES ON HVAC EQUIPMENT.
2. REPAIR OR REPLACE WITHOUT CHARGE TO THE OWNER ALL ITEMS FOUND DEFECTIVE DURING THE WARRANTY PERIOD. IN THE CASE OF REPLACEMENT OR REPAIR DUE TO FAILURE WITHIN THE WARRANTY PERIOD, THE WARRANTY ON THAT PORTION OF THE WORK SHALL BE EXTENDED FOR A MINIMUM PERIOD OF ONE (1) YEAR FROM THE DATE OF SUCH REPLACEMENT OR REPAIR.

M. PIPING SYSTEMS (220000)

1. CONNECTIONS BETWEEN DISSIMILAR PIPING MATERIALS SHALL BE MADE WITH SUITABLE DIELECTRIC INSULATING FITTINGS. ISOLATE COPPER PIPING FROM DISSIMILAR METALS, SUCH AS METAL STUDS AND VENT PIPING.
2. ALL PIPING SHALL RUN CONCEALED ABOVE CEILING OR IN WALL CHASE, UNLESS OTHERWISE NOTED. EXPOSED PIPING SHALL BE 3/4 INCH MINIMUM FROM ANY WALL SURFACE. EXCEPT WHERE OTHERWISE INDICATED ON THE DRAWINGS, PIPING IS SHOWN ON THE FLOOR WHERE IT ACTUALLY OCCURS IN THE BUILDING.

GAS PIPING (231123 - NATURAL; 231126 - PROPANE)

1. PROVIDE AN AGA APPROVED OR UL LISTED GAS VALVE AND QUICK-DISCONNECT UNION AT EACH PIECE OF GAS FUELED EQUIPMENT AND AS INDICATED ON THE DRAWINGS. PROVIDE ATMOSPHERIC VENTS FOR GAS REGULATORS IN ACCORDANCE WITH LOCAL CODE AND SUPPLIER'S REQUIREMENTS. VALVES SHALL BE INSTALLED AT AN ACCESSIBLE LOCATION. GAS VALVES 2 INCHES AND SMALLER SHALL BE AGA OR UL APPROVED. VALVES 2-1/2 INCHES AND LARGER SHALL BE CERTIFIED BY THE MANUFACTURER TO BE SUITABLE FOR GAS SERVICE AND SHALL BE MINIMUM 125 PSI RATED. 1
2. ALL EXPOSED METALLIC PIPE AND TUBING SHALL BE PROTECTED AGAINST CORROSION IN ACCORDANCE WITH INTERNATIONAL FUEL GAS CODE, AND AUTHORITY HAVING JURISDICTION. PROTECTIVE COATINGS AND WRAPPINGS SHALL BE OF APPROVED TYPE AND COLOR FOR THE INTENDED APPLICATION. GAS PIPING ROUTED EXPOSED AND IN FINISHED AREAS SHALL BE PAINTED YELLOW IN COLOR.
3. ALL ABOVE GROUND, EXTERIOR PIPING SHALL BE MOUNTED NOT LESS THAN 3-1/2" ABOVE GRADE AND WHERE INSTALLED ON ROOF SURFACES. PIPING SHALL BE SUPPORTED AND LOCATED WHERE IT WILL BE PROTECTED FROM PHYSICAL DAMAGE. VERTICAL PIPING SHALL BE SUPPORTED BY GALVANIZED SPLIT RING, GALVANIZED UNISTRUT SYSTEM, OR GALVANIZED RISER CLAMPS. HORIZONTAL PIPING ON ROOF SHALL BE SUPPORTED BY A CLOSED-CELL POLYETHYLENE FOAM SUPPORT SYSTEM THAT IS UV AND WEATHER RESISTANT AND INCLUDE A GALVANIZED STRUT CHANNEL; BASIS OF DESIGN: FNW MODEL# FNW7701PP OR B-LINE DURABLOCK ROOFTOP PIPING SUPPORTS WITH COMPATIBLE UNISTRUT CLAMPS.
4. WELDING SHALL BE PERFORMED BY STATE CERTIFIED WELDERS. PROVIDE WELDING CERTIFICATIONS TO A/E.
5. GAS PIPING SHALL BE AS FOLLOWS:
   a. ABOVE-GRADE INSIDE OR OUTSIDE BUILDING, LOW PRESSURE - SCHEDULE 40 SEAMLESS BLACK STEEL PIPE, BEVELED ENDS.
   i. 2" AND SMALLER - THREADED FITTINGS, WROUGHT IRON.
   ii. 2 1/2" AND LARGER - WELDED FITTINGS, BLACK STEEL.
   b. INSIDE BUILDING, REGULATED PRESSURE - SCHEDULE 40 BLACK STEEL WITH WELDED BLACK STEEL FITTINGS.
   d. BELOW GRADE, HIGH PRESSURE SERVICE 60 PSI AND OVER - SCHEDULE 40 BLACK STEEL COATED AND WRAPPED WITH WELDED BLACK STEEL FITTINGS. INSTALL CATHODIC PROTECTION ANODE ON SERVICE LINE.
   e. VALVES SHALL NOT BE LOCATED ABOVE ACCESSIBLE CEILING SPACES (SUBJECT TO THE APPROVAL OF THE AUTHORITY HAVING JURISDICTION), WHETHER OR NOT SUCH SPACES ARE USED AS A PLENUM.

HANGERS AND SUPPORTS (220529)

1. INSTALL PIPING SYSTEMS TO PERMIT FREE MOVEMENT FOR EXPANSION. SUPPORT ALL PIPING FROM STRUCTURE WITH UL LISTED HANGERS AND SUPPORTS SUITABLE FOR THE INTENDED INSTALLATION. DESIGN, SELECTION, SPACING, AND APPLICATION OF HANGERS AND SUPPORTS SHALL COMPLY WITH ANSI B31.1, MSS SP-69, AND PIPE MANUFACTURER'S RECOMMENDED SPACING REQUIREMENTS.
2. PROVIDE INSULATION HANGER WITH PROTECTIVE SHIELDS ON SYSTEMS REQUIRING A VAPOR BARRIER. HANGER SHALL BE PROVIDED AT EACH CHANGE OF DIRECTION. HANGERS AND SUPPORTS SHALL BE SPACED AT INTERVALS WHICH WILL PREVENT SAGGING AND REDUCE STRAIN ON VALVES AND SPECIALTIES; ALL PIPING SUPPORTS AND RESTRAINTS SHALL BE IN STRICT ACCORDANCE WITH THE PIPE MANUFACTURER'S RECOMMENDATIONS AND INSTALLATION GUIDELINES. HANGERS SHALL ALLOW FOR EXPANSION AND CONTRACTION.
3. RISER CLAMPS SHALL BE INSTALLED ABOVE THE FLOOR AT EACH LEVEL. RISER CLAMPS MAY BE SUSPENDED BELOW FLOOR LEVEL, WITH HANGER RODS AND INSERTS, WHERE THE INSTALLATION OF ESCUTCHEON PLATES IS REQUIRED.
4. HANGER SPACING SHALL BE NO GREATER AND ROD SIZE SHALL BE NO SMALLER THAN THAT SHOWN IN THE ON THE HANGER SCHEDULE.
5. HANGERS FOR BLACK OR GALVANIZED STEEL PIPE SHALL BE MANUFACTURED BY MICHIGAN HANGER CO., MODEL NO. 100, OR APPROVED EQUAL.
6. HANGERS FOR CAST IRON PIPE SHALL BE MANUFACTURED BY MICHIGAN HANGER CO., MODEL NO. 400, OR APPROVED EQUAL.
7. HANGERS FOR COPPER TUBING SHALL BE MANUFACTURED BY MICHIGAN HANGER CO., MODEL NO. 102-A, OR APPROVED EQUAL.
8. TRAPEZE HANGERS OF A TYPE APPROVED BY THE ENGINEER. MAINTAIN PIPE INSULATION AT PIPE ANCHORS. PROVIDE INSULATION COUPLERS AS SPECIFIED ABOVE.
9. CONTRACTOR SHALL PROVIDE INSULATION HANGER WITH PROTECTIVE SHIELDS, SUCH AS MICHIGAN HANGER CO., MODEL NO. 103, OR APPROVED EQUAL. 5-INCH-LONG SECTION OF 1/2 INCH THICK CALCIUM SILICATE SECTIONAL PIPE INSULATION WITH FACTORY LONGITUDINAL LAP SHALL BE PROVIDED AT HANGER POINTS. BUTT JOINTS SHALL BE SEALED WITH INSULATING CEMENT.
10. STRAP HANGERS SHALL NOT BE PERMITTED.
11. CONTRACTOR SHALL PROVIDE RISER CLAMPS FOR VERTICAL PIPING AT EACH LEVEL. RISER CLAPS SHALL BE MICHIGAN HANGER CO., MODEL NO. 510 FOR STEEL PIPING AND MODEL NO. 511 FOR COPPER TUBING OR APPROVED EQUAL. USE "SHORT-END" RISER CLAMPS WHERE SPACE IS LIMITED.
12. IN CONCRETE, MICHIGAN HANGER CO., MODEL NO. 355 INSERTS, OR APPROVED EQUAL. INSERTS SHALL PERMIT ADJUSTMENT FROM 3/4 INCH THROUGH 1-1/4 INCH. IN METAL DECKS, CONTRACTOR SHALL PROVIDE REDHEAD SDI INSERTS, OR APPROVED EQUAL. POWDER PROPELLED INSERTS WILL BE PERMITTED IN NEW CONSTRUCTION WHERE TYPE AND LOCATION ARE APPROVED BY THE ENGINEER PRIOR TO INSTALLATION.
13. CONTRACTOR SHALL PROVIDE SIDE BEAM CLAMPS FOR SUPPORTING PIPING FROM STRUCTURAL STEEL MEMBERS. BEAM CLAMPS SHALL BE MANUFACTURED BY MICHIGAN HANGER CO., MODEL 300 OR APPROVED EQUAL.
14. WHERE OTHER MEANS OF SUPPORT PIPING ARE REQUIRED OR DESIRED, THE CONTRACTOR SHALL BE RESPONSIBLE FOR OBTAINING THE ENGINEER'S APPROVAL PRIOR TO INSTALLING THOSE SUPPORTS.
15. HANGER SHALL BE PROVIDED AT EACH CHANGE OF DIRECTION.
16. HANGERS AND SUPPORTS SHALL BE SPACED AT INTERVALS WHICH WILL PREVENT SAGGING AND REDUCE STRAIN ON VALVES AND SPECIALTIES. HANGERS SHALL ALLOW FOR EXPANSION AND CONTRACTION.
17. RISER CLAMPS SHALL BE INSTALLED ABOVE THE FLOOR AT EACH LEVEL. RISER CLAMPS MAY BE SUSPENDED BELOW FLOOR LEVEL, WITH HANGER RODS AND INSERTS, WHERE THE INSTALLATION OF ESCUTCHEON PLATES IS REQUIRED.

PIPE WALL SEALS (220500)

1. WALL PIPE SEALS WITH RUBBER LINKS SHALL BE THUNDERLINE LINK SEAL, OR APPROVED EQUAL. WALL PIPE SEALS WITH INORGANIC MATERIAL LINKS THE PENETRATIONS OF FIRE RATED WALLS SHALL BE THUNDERLINE PYRO-PAC, OR APPROVED EQUAL.
2. SEALS SHALL BE MODULAR MECHANICAL TYPE CONSISTING OF INTERLOCKING SYNTHETIC RUBBER OR INORGANIC MATERIAL LINKS SHAPED TO CONTINUOUSLY FILL THE ANNULAR SPACE BETWEEN THE PIPE AND WALL OPENING.
3. LINKS SHALL BE LOOSELY ASSEMBLED WITH BOLTS TO FORM A CONTINUOUS BELT AROUND THE PIPE. A PRESSURE PLATE SHALL BE PROVIDED UNDER THE BOLT HEAD AND NUT OF EACH LINK.
4. AFTER THE SEAL ASSEMBLY IS POSITIONED IN THE SLEEVE, THE TIGHTENING OF THE BOLTS SHALL CAUSE THE SEALING ELEMENTS TO EXPAND AND PROVIDE AN ABSOLUTELY WATER-TIGHT SEAL BETWEEN THE PIPE AND SLEEVE.
5. SEALS SHALL BE CONSTRUCTED TO PROVIDE ELECTRICAL INSULATION BETWEEN THE PIPE AND SLEEVE, THUS REDUCING THE CHANCES OF CATHODIC REACTION BETWEEN THESE TWO MEMBERS.
6. SLEEVES SHALL BE MANUFACTURED FROM HEAVY-WALL, WELDED OR SEAMLESS STEEL PIPE. A FULL CIRCLE CONTINUOUSLY WELDED WATER STOP PLATE SHALL BE PROVIDED TO ASSURE POSITIVE WATER SEALING OF THE SLEEVE. SLEEVES SHALL BE PROTECTED BY A COATING OF ENRICHED RED PRIMER.

EQUIPMENT (220500)

1. MAKE ALL FINAL EQUIPMENT AND FIXTURE CONNECTIONS AND PROVIDE THE NECESSARY ADAPTORS, FITTINGS, VALVES, DEVICES, ETC. FOR A COMPLETE AND OPERABLE SYSTEM. PROVIDE COMPLETE WITH BASES, ISOLATORS, SUPPORTS AND OTHER REQUIRED ACCESSORIES. PROVIDE VALVES AND UNIONS WHERE NEEDED TO PERMIT DISCONNECTIONS OF EACH PIECE OF EQUIPMENT FOR REPAIRS. PLUMBING CONNECTIONS SHOWN ARE NOMINAL. VERIFY EXACT CONNECTION SIZE WITH EACH PIECE OF EQUIPMENT SUPPLIED.
2. EQUIPMENT SHALL BE INSTALLED IN FULL ACCORDANCE WITH THE MANUFACTURER'S DATA AND INSTALLATION INSTRUCTIONS, INCLUDING CLEARANCES, LUBRICATE AND ADJUST AS REQUIRED. IT IS THIS CONTRACTOR'S RESPONSIBILITY TO CHECK AND CONFORM TO THESE REQUIREMENTS PRIOR TO STARTING WORK. FURNISH AND INSTALL CLEAN SET OF FILTERS PRIOR TO BALANCING.
3. THE CONTRACTOR SHALL COORDINATE THE ELECTRICAL CHARACTERISTICS OF ALL MECHANICAL EQUIPMENT PRIOR TO ORDERING OF EQUIPMENT. COORDINATE REQUIREMENT FOR PROVISION OF MOTOR STARTERS, DISCONNECTS, CONTACTORS, CONTROL WIRING, ETC. AS REQUIRED FOR A PROPER FUNCTIONING SYSTEM WITH ELECTRICAL CONTRACTOR. NO ADDITIONAL PAYMENT WILL BE MADE FOR LACK OF CONTRACTOR COORDINATION OF ELECTRICAL CHARACTERISTICS.
4. ALL FLOOR MOUNTED EQUIPMENT SHALL BE INSTALLED ON CONCRETE HOUSEKEEPING PADS. MINIMUM PAD THICKNESS SHALL BE NOMINAL 4". PAD SHALL EXTEND BEYOND THE EQUIPMENT A MINIMUM OF 4" ON EACH SIDE. CONCRETE PADS SHALL BE PROVIDED BY THIS CONTRACTOR. IT SHALL BE THE RESPONSIBILITY OF THE THIS CONTRACTOR TO COORDINATE THE SIZE AND LOCATION OF THE CONCRETE HOUSEKEEPING PADS WITH THE GENERAL CONTRACTOR.
5. ALL EQUIPMENT SHALL BE MOUNTED ON VIBRATION ISOLATORS TO PREVENT THE TRANSMISSION OF VIBRATION AND MECHANICALLY TRANSMITTED SOUND TO THE BUILDING STRUCTURE.
6. ISOLATION EQUIPMENT SHALL BE THE PRODUCT OF A SINGLE MANUFACTURER AND SHALL BE DESIGNED SPECIFICALLY FOR THE APPLICATION REQUIRED. THIS INCLUDES, BUT IS NOT LIMITED TO, PIPING DUCTWORK, PUMPS, COMPRESSORS. VIBRATION ISOLATORS SHALL BE RATED FOR THE WEIGHT AND SPACING REQUIRED FOR THE EQUIPMENT REQUIRING ISOLATION.
7. ALL CONDENSATE DRAINS SHALL BE TRAPPED PER DETAIL ON MECHANICAL DRAWINGS. PROVIDE CLEANOUT(S). PROVIDE AUXILIARY DRAIN PANS AT ALL EQUIPMENT WHERE DAMAGE TO ANY BUILDING COMPONENT COULD OCCUR AS A RESULT OF OVERFLOW OR STOPPAGE OF THE PRIMARY SYSTEM. WATER LEVEL DETECTION SHALL BE PROVIDED IN AUXILIARY PAN TO PROVIDE SHUT DOWN OF EQUIPMENT.
8. PROVIDE CURBS FOR ALL ROOF OPENINGS FOR DUCTS, FLUES, PIPING AND EQUIPMENT. CURBS SHALL BE FURNISHED AS ACCESSORIES TO THE EQUIPMENT OR 8" HIGH PATE OR EQUAL EQUIPMENT SUPPORTS SPANNING STRUCTURE AND FLASHED INTO ROOFING. ALL CUTTING, FLASHING, AND PATCHING OF THE ROOF SHALL BE BY OWNER'S ROOFING CONTRACTOR AND PAID FOR BY PLUMBING CONTRACTOR.
9. SEAL JOINTS BETWEEN PLUMBING FIXTURES AND THE SURFACE TO WHICH THEY ARE MOUNTED USING SANITARY-TYPE, ONE-PART, MILDEW RESISTANT SILICONE SEALANT. MATCH SEALANT COLOR TO FIXTURE COLOR.

IDENTIFICATION (220553)

1. CONTRACTOR SHALL PROVIDE IDENTIFICATION LABELS, TAGS, ETC. AS INDICATED ON THE DRAWINGS AND AS SPECIFIED HEREIN. THE IDENTIFICATION SHALL BE IN ACCORDANCE WITH ANSI STANDARD A13.1. PRESSURE SENSITIVE MARKERS SHALL BE MANUFACTURED BY THE BRADY CO., OR APPROVED EQUAL. MARKERS SHALL BE MANUFACTURER'S STANDARD PRODUCT. PRESSURE SENSITIVE PIPE MARKERS SHALL BE MANUFACTURED BY THE BRADY CO., OR APPROVED EQUAL. PIPE MARKERS SHALL BE MANUFACTURER'S STANDARD PRODUCT.
2. PIPE LABEL LOCATIONS: LOCATE PIPE LABELS WHERE PIPING IS EXPOSED OR ABOVE ACCESSIBLE CEILINGS IN FINISHED SPACES; MACHINE ROOMS; ACCESSIBLE MAINTENANCE SPACES SUCH AS SHAFTS, TUNNELS, AND PLENUMS; AND EXTERIOR EXPOSED LOCATIONS AS FOLLOWS:
   a. NEAR EACH VALVE AND CONTROL DEVICE.
   b. NEAR EACH BRANCH CONNECTION, EXCLUDING SHORT TAKEOFFS FOR FIXTURES AND TERMINAL UNITS. WHERE FLOW PATTERN IS NOT OBVIOUS, MARK EACH PIPE AT BRANCH.
   c. NEAR PENETRATIONS AND ON BOTH SIDES OF THROUGH WALLS, FLOORS, CEILINGS, AND INACCESSIBLE ENCLOSURES.
   d. AT ACCESS DOORS, MANHOLES, AND SIMILAR ACCESS POINTS THAT PERMIT VIEW OF CONCEALED PIPING.
   e. NEAR MAJOR EQUIPMENT ITEMS AND OTHER POINTS OF ORIGINATION AND TERMINATION.
   f. SPACED AT MAXIMUM INTERVALS OF 50 FEET (15 m) ALONG EACH RUN. REDUCE INTERVALS TO 25 FEET (7.6 m) IN AREAS OF CONGESTED PIPING AND EQUIPMENT.
3. PROVIDE VALVE TAGS AND VALVE CHART PER ASME A13.1 SCHEME FOR THE IDENTIFICATION OF PIPING SYSTEMS.

CHECK, TEST, START, ADJUST, BALANCE AND INSTRUCTIONS (220593)

1. AFTER THE INSTALLATION, CHECK ALL EQUIPMENT, AND PERFORM START UP IN ACCORDANCE WITH THE MANUFACTURER'S INSTRUCTIONS.
2. PERFORM A HYDROSTATIC PRESSURE TEST ON ALL PIPING, AT THE PIPING SYSTEM WORKING PRESSURE, FOR A MINIMUM PERIOD OF 24-HOURS. REPAIR ANY LEAKS AND RETEST TO DEMONSTRATE TIGHTNESS. STOP-LEAK COMPOUNDS WILL NOT BE ALLOWED. ALL PIPING FOR PRESSURIZED WATER SYSTEMS SHALL HAVE A MINIMUM PRESSURE RATING OF 150 PSI.
3. CONCEALED OR INSULATED WORK SHALL REMAIN UNCOVERED UNTIL REQUIRED TESTS HAVE BEEN COMPLETED, BUT IF THE CONSTRUCTION SCHEDULE REQUIRES IT, ARRANGE FOR PRIOR TESTS ON PARTS OF SYSTEM AS APPROVED BY THE TENANT.
4. START UP AND PLACE ALL SYSTEMS IN OPERATION AND TAG ALL VALVES, SWITCHES AND CONTROLS WITH PERMANENT LABELS.
5. PROVIDE OWNER TRAINING AND DEMONSTRATION OF ALL PLUMBING SYSTEMS AND EQUIPMENT. INSTRUCT OWNER ON PROPER OPERATION AND PREVENTATIVE MAINTENANCE OF SYSTEM. SUBMIT OPERATING AND MAINTENANCE MANUAL ON ALL EQUIPMENT AND SYSTEMS.

VILLAGE OF OAK PARK
CONSTRUCTION DOCUMENT(S)
REVIEWED FOR COMPLIANCE
KEEP A PRINTED APPROVED COPY OF THE PLANS ON SITE AT ALL TIMES FOR CONTRACTORS AND INSPECTORS
- Signage is required to provide the address, contractor name and emergency contact information
- Before you dig call J.U.L.I.E @ 811
- Construction hours are 7:00AM through 6:00PM all seven days a week
- Address numbers shall be posted in the front and in the alley of the site (if applicable)
- Trees shall be protected in the parkways; do not block sidewalks or alleyways
- Portable toilets shall be properly maintained a minimum of 10' from the lot line
- Construction fencing shall secure the site and materials(6' high for res. & 8' high for comm. sites)
- Respect the neighboring properties; do not trespass on or damage neighboring properties
- Keep the site clean, safe, organized and free from debris.
- Maintain all guardrails, walkways, ladders and stairs in a safe condition

Any and all changes and/or deviations to the approved plans shall be proposed in writing, in triplicate, for a complete re-review and re-approval.

625 W Adams Street – 19th Floor
Chicago, IL 60661
312.320.3668

LICENSED PROFESSIONAL ENGINEER
ALEXANDER G. RADKOFF
062-073334
OF ILLINOIS

DESIGN FIRM LIC. NO: 184008703-002
DESIGN FIRM LIC. NO. EXP.: 04.30.2027
ILLINOIS LICENCE NUMBER: 062.073334
LIC. EXP.: 11.30. 2025

1144 Lake Street, LLC

BASE BUILDING MECHANICAL RENOVATIONS

1144 W LAKE ST
OAK PARK, IL 60301

NO.	DESCRIPTION	DATE
1	PERMIT REVISION 1	09/19/2025
1	ISSUED FOR PERMIT	08/26/2025

JOB NO.: 25.068

SCALE: AS SHOWN

TITLE: PLUMBING SPECIFICATIONS

SHEET: P0.2

8/24/2025 4:52:45 PM

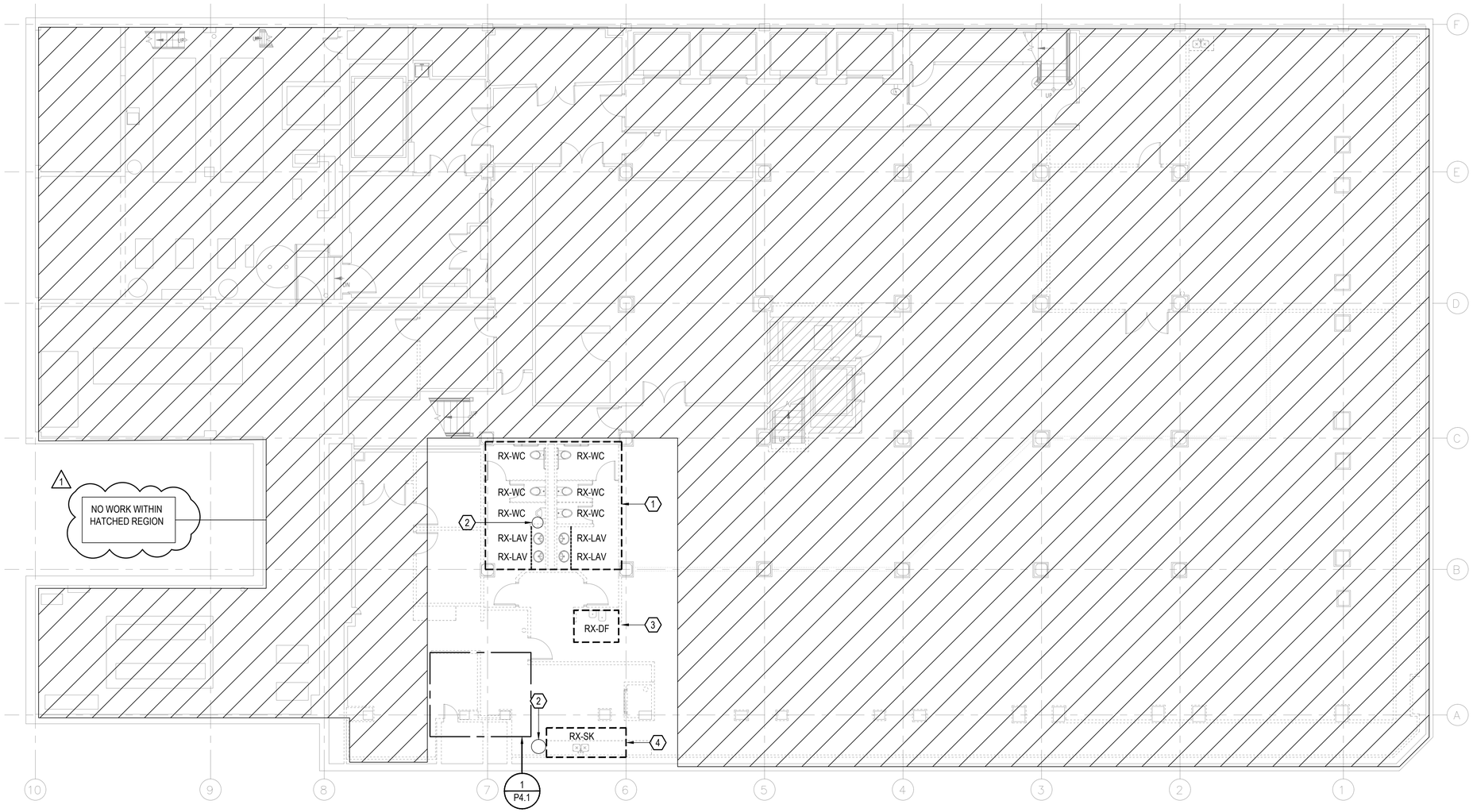

1 P1.1 BASEMENT PLUMBING DEMOLITION PLAN
1/8" = 1'-0"

SCALE: 1/8" = 1'-0"

PLUMBING DEMOLITION GENERAL NOTES:

1. EXISTING CONDITIONS SHOWN ON THIS DRAWING HAVE BEEN OBTAINED FROM EXISTING DRAWINGS, FIELD OBSERVATIONS AND PHOTOS, AND MAY NOT INDICATE ALL ACTUAL EXISTING CONDITIONS. THE CONTRACTOR IS RESPONSIBLE FOR DETERMINING THE ACTUAL EXISTING CONDITIONS PRIOR TO FABRICATION OR PERFORMANCE OF ANY WORK. SHOULD CONDITIONS BE DISCOVERED THAT PREVENT EXECUTION OF THE WORK AS INDICATED, THE CONTRACTOR SHALL IMMEDIATELY NOTIFY THE ENGINEER AND ARCHITECT IN WRITING AND AWAIT DIRECTION BEFORE PROCEEDING WITH THE WORK.
2. PATCH ALL WALL, FLOOR, AND CEILING SURFACES SCHEDULED TO REMAIN, WHERE MEP ELEMENTS ARE BEING REMOVED, TO MATCH EXISTING CONDITIONS. REFER TO ARCHITECTURAL DRAWINGS FOR ADDITIONAL INFORMATION.
3. PRIOR TO DISCONNECTION OF ANY PIPING SYSTEM, CONTRACTOR SHALL VERIFY SERVICES TO OTHER AREAS OF THE BUILDING NOT IN CONTRACT WILL NOT BE AFFECTED.

PLUMBING DEMOLITION KEY NOTES: (#)

1. DEMOLISH ALL PLUMBING FIXTURES IN BATHROOM. CAP EXISTING SANITARY PIPING AT FLOOR. EXISTING PLUMBING ROUGH-IN PIPING IN WALL SHALL BE DEMOLISHED ENTIRELY.
2. EXITING ELECTRIC WATER HEATER UNDER SINK TO BE DEMOLISHED.
3. DEMOLISH EXISTING DRINKING FOUNTAIN INCLUDING ASSOCIATED PLUMBING ROUGH-IN PIPING.
4. DEMOLISH EXISTING DOUBLE SINK INCLUDING ASSOCIATED PLUMBING ROUGH-IN PIPING.

VILLAGE OF OAK PARK
CONSTRUCTION DOCUMENT(S)
REVIEWED FOR COMPLIANCE
KEEP A PRINTED APPROVED COPY OF THE PLANS ON SITE AT ALL TIMES FOR CONTRACTORS AND INSPECTORS

625 W Adams Street – 19th Floor
Chicago, IL 60661
312.320.3668

LICENSED PROFESSIONAL ENGINEER
ALEXANDER G. RADKOFF
062-073334
OF ILLINOIS

DESIGN FIRM LIC. NO: 184008703-002
DESIGN FIRM LIC. NO. EXP : 04.30.2027
ILLINOIS LICENCE NUMBER: 062.073334
LIC. EXP.: 11.30. 2025

1144 Lake Street, LLC

BASE BUILDING MECHANICAL RENOVATIONS

1144 W LAKE ST
OAK PARK, IL 60301

NO.	DESCRIPTION	DATE
1	PERMIT REVISION 1	09/19/2025
	ISSUED FOR PERMIT	08/25/2025

JOB NO.: 25.068

SCALE: AS SHOWN

TITLE: BASEMENT FLOOR PLUMBING DEMOLITION PLAN

SHEET: P1.1

8/24/2025 4:52:45 PM

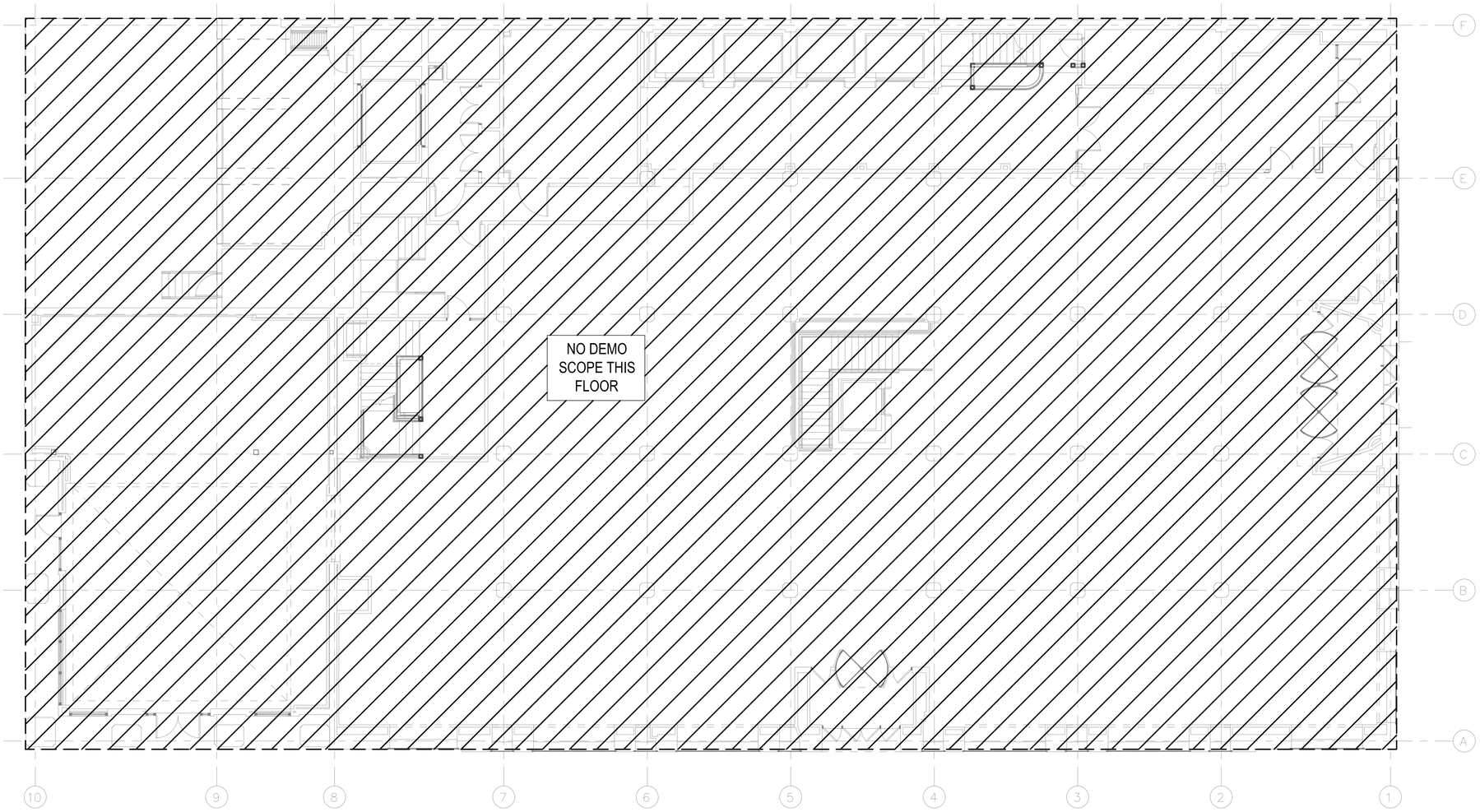

1 / P1.2 GROUND FLOOR PLUMBING DEMOLITION PLAN
1/8" = 1'-0"

0 1' 2' 3' 4' 5' 10'
SCALE: 1/8" = 1'-0"

VILLAGE OF OAK PARK
CONSTRUCTION DOCUMENT(S)
REVIEWED FOR COMPLIANCE

KEEP A PRINTED APPROVED COPY OF THE PLANS ON SITE AT ALL TIMES FOR CONTRACTORS AND INSPECTORS

625 W Adams Street – 19th Floor
Chicago, IL 60661
312.320.3668

LICENSED PROFESSIONAL ENGINEER
ALEXANDER G. RADKOFF
062-073334
OF ILLINOIS

DESIGN FIRM LIC. NO: 184008703-002
DESIGN FIRM LIC. NO. EXP : 04.30.2027
ILLINOIS LICENCE NUMBER: 062.073334
LIC. EXP.: 11.30. 2025

1144 Lake Street, LLC

BASE BUILDING MECHANICAL RENOVATIONS

1144 W LAKE ST
OAK PARK, IL 60301

NO.	DESCRIPTION	DATE
1	PERMIT REVISION 1	09/19/2025
1	ISSUED FOR PERMIT	08/25/2025

JOB NO.: 25.068

SCALE: AS SHOWN

TITLE: GROUND FLOOR PLUMBING DEMOLITION PLAN

SHEET: P1.2

9/24/2025 4:52:45 PM

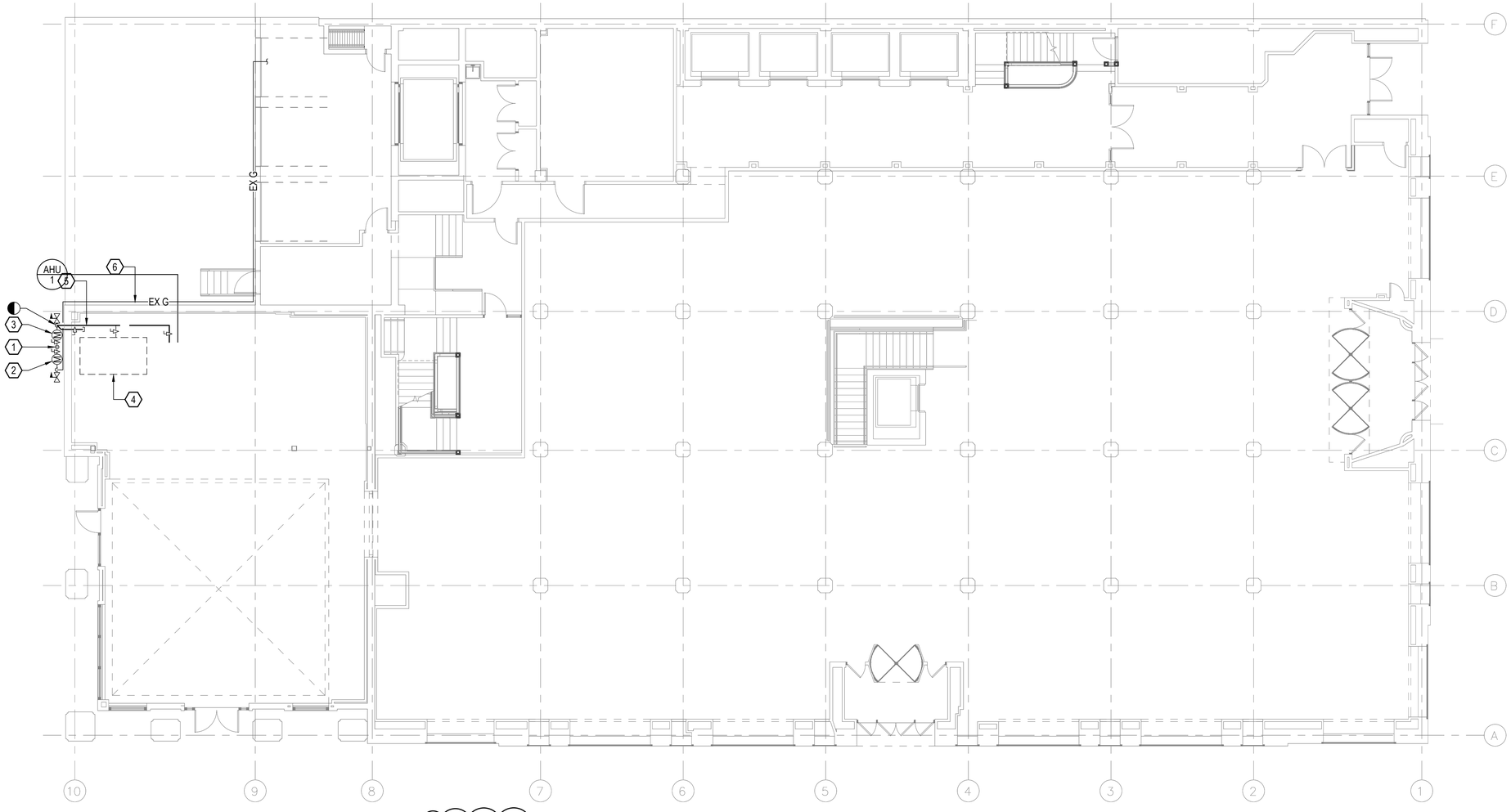

1 / P1.3 GROUND FLOOR GAS PIPING DEMOLITION PLAN
1/8" = 1'-0"

0 1' 2' 3' 4' 5' 10'
SCALE: 1/8" = 1'-0"

PLUMBING DEMOLITION KEY NOTES: (#)

1. EXISTING GAS SERVICE FROM STREET MAIN TO REMAIN.
2. EXISTING BUILDING METER TO REMAIN.
3. EXISTING RETAIL GAS METER TO REMAIN.
4. EXISTING MECH. RTU TO BE DEMOLISHED.
5. EXISTING GAS FEED TO MECH. RTU TO BE DEMOLISHED.
6. EXISTING GAS FEED TO BUILDING TO REMAIN.

PLUMBING DEMOLITION GENERAL NOTES:

1. EXISTING CONDITIONS SHOWN ON THIS DRAWING HAVE BEEN OBTAINED FROM EXISTING DRAWINGS, FIELD OBSERVATIONS AND PHOTOS, AND MAY NOT INDICATE ALL ACTUAL EXISTING CONDITIONS. THE CONTRACTOR IS RESPONSIBLE FOR DETERMINING THE ACTUAL EXISTING CONDITIONS PRIOR TO FABRICATION OR PERFORMANCE OF ANY WORK. SHOULD CONDITIONS BE DISCOVERED THAT PREVENT EXECUTION OF THE WORK AS INDICATED, THE CONTRACTOR SHALL IMMEDIATELY NOTIFY THE ENGINEER AND ARCHITECT IN WRITING AND AWAIT DIRECTION BEFORE PROCEEDING WITH THE WORK.

VILLAGE OF OAK PARK
CONSTRUCTION DOCUMENT(S)
REVIEWED FOR COMPLIANCE
KEEP A PRINTED APPROVED COPY OF THE PLANS ON SITE AT ALL TIMES FOR CONTRACTORS AND INSPECTORS

625 W Adams Street – 19th Floor
Chicago, IL 60661
312.320.3668

LICENSED PROFESSIONAL ENGINEER
ALEXANDER G. RADKOFF
062-073334
OF ILLINOIS

DESIGN FIRM LIC. NO: 184008703-002
DESIGN FIRM LIC. NO. EXP.: 04.30.2027
ILLINOIS LICENCE NUMBER: 062.073334
LIC. EXP.: 11.30. 2025

1144 Lake Street, LLC

BASE BUILDING MECHANICAL RENOVATIONS

1144 W LAKE ST
OAK PARK, IL 60301

NO.	DESCRIPTION	DATE
1	PERMIT REVISION 1	09/19/2025
1	ISSUED FOR PERMIT	08/26/2025

JOB NO.: 25.068

SCALE: AS SHOWN

TITLE: GROUND FLOOR GAS PIPING DEMO PLAN

SHEET: P1.3

8/24/2025 4:52:45 PM

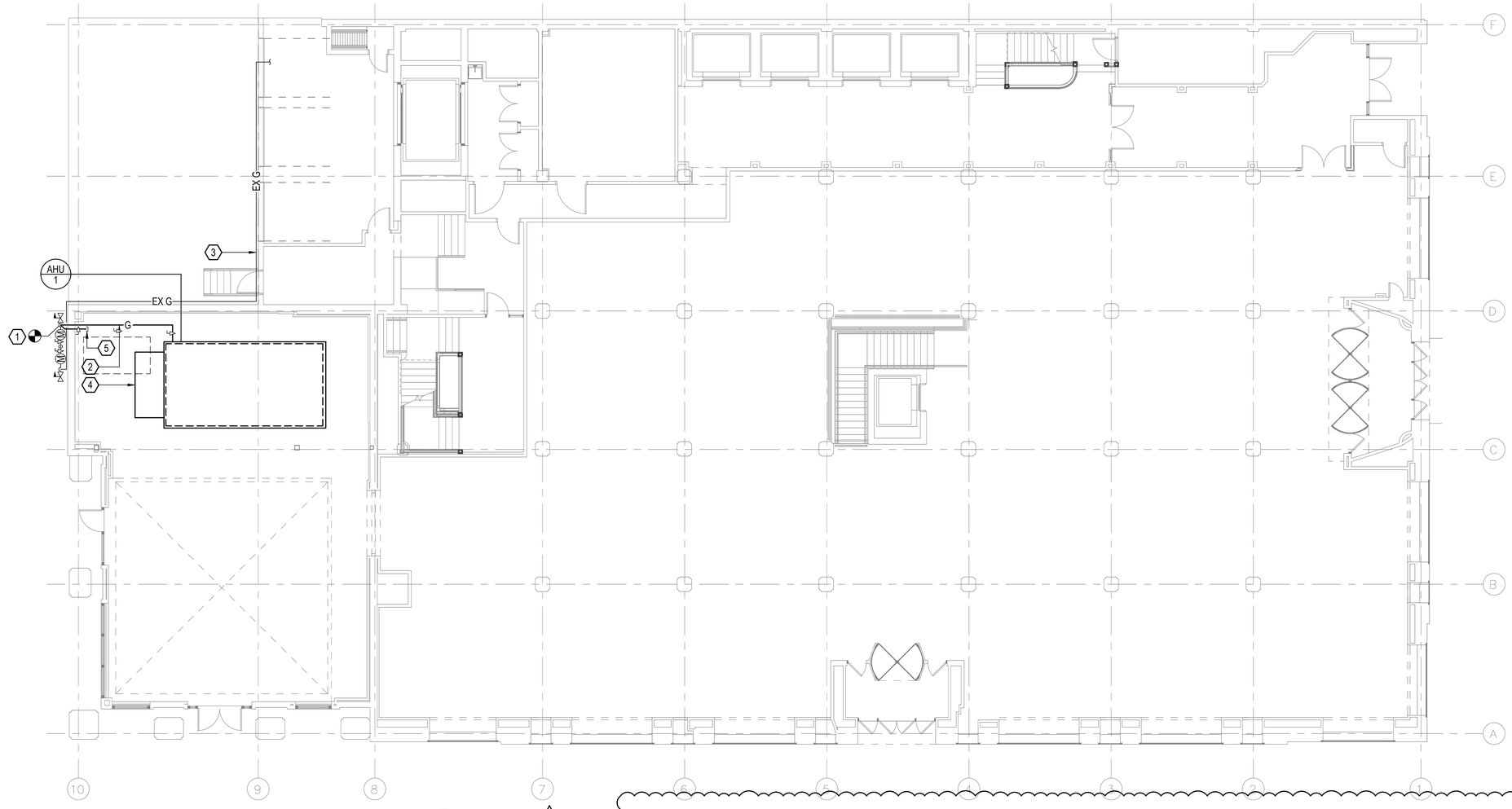

1 P2.1 GROUND FLOOR GAS PIPING PLAN
1/8" = 1'-0"

0 1' 2' 3' 4' 5' 10'
SCALE: 1/8" = 1'-0"

1

PLUMBING SUPPLY KEY NOTES:

1. NEW CONNECTION TO EXISTING GAS SERVICE DOWNSTREAM OF METER.
2. NEW ROOF MOUNTED GAS PIPING FOR NEW AHU.
3. EXISTING GAS FEED TO BUILDING TO REMAIN.
4. NEW MECHANICAL SYSTEM AHU. SEE MECH DRAWINGS.
5. EXISTING GAS FEED TO MECH. RTU TO BE DEMOLISHED.
6. NEW 1" GAS WITH LOCKED VALVE AND CAPPED FOR FUTURE TENANT USE.

PLUMBING SUPPLY GENERAL NOTES:

1. COORDINATE FIXTURES, PIPING, AND EQUIPMENT WITH OTHER TRADES.
2. PROVIDE INTERFERENCE/ COORDINATION DRAWINGS AS SPECIFIED.
3. SEE DETAILS FOR ADDITIONAL REQUIREMENTS.

PLUMBING GAS RISER KEY NOTES:

1. EXISTING GAS SERVICE FROM STREET MAIN TO REMAIN.
2. EXISTING GAS CONTROL VALVE.
3. EXISTING RETAIL GAS METER TO REMAIN.
4. EXISTING BUILDING METER TO REMAIN.
5. EXISTING GAS FEED TO ROOF TOP UNIT TO BE DEMOLISHED.
6. NEW 1-1/2" GAS FEED TO NEW ROOF TOP UNIT.
7. EXISTING MECH. RTU TO BE DEMOLISHED.
8. NEW MECHANICAL ROOF TOP UNIT. SEE MECH. DRAWINGS.
9. 1" LOCKED VALVE AND CAPPED OUTLET FOR FUTURE RETAIL TENANT USE INSIDE TENANT SPACE.
10. EXISTING GAS FEED TO BUILDING TO REMAIN.
11. EXISTING LOCKED VALVED AND CAPPED OUTLET ON BUILDING FEED TO REMAIN.

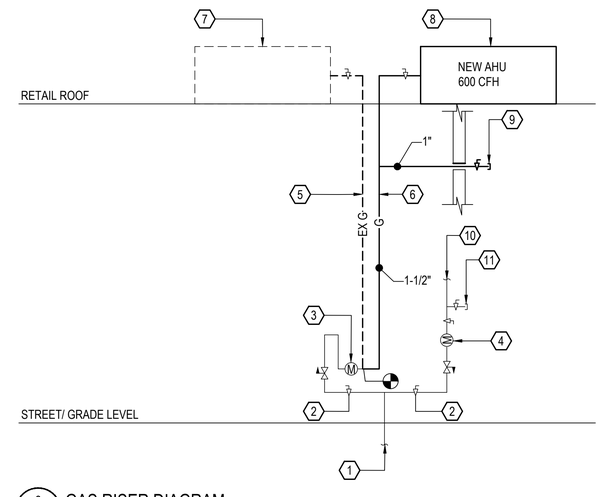

2 P2.1 GAS RISER DIAGRAM
N.T.S

1

VILLAGE OF OAK PARK
CONSTRUCTION DOCUMENT(S)
REVIEWED FOR COMPLIANCE

KEEP A PRINTED APPROVED COPY OF THE PLANS ON SITE AT ALL TIMES FOR CONTRACTORS AND INSPECTORS

625 W Adams Street – 19th Floor
Chicago, IL 60661
312.320.3668

LICENSED PROFESSIONAL ENGINEER
ALEXANDER G. RADKOFF
062-073334
OF ILLINOIS

DESIGN FIRM LIC. NO: 184008703-002
DESIGN FIRM LIC. NO. EXP.: 04.30.2027
ILLINOIS LICENCE NUMBER: 062.073334
LIC. EXP.: 11.30. 2025

1144 Lake Street, LLC

BASE BUILDING MECHANICAL RENOVATIONS

1144 W LAKE ST
OAK PARK, IL 60301

NO.	DESCRIPTION	DATE
1	PERMIT REVISION 1	09/19/2025
	ISSUED FOR PERMIT	08/25/2025

JOB NO.: 25.068

SCALE: AS SHOWN

TITLE: GROUND FLOOR PLUMBING PLANS & GAS RISER DIAGRAM

SHEET: P2.1

8/24/2025 4:52:45 PM

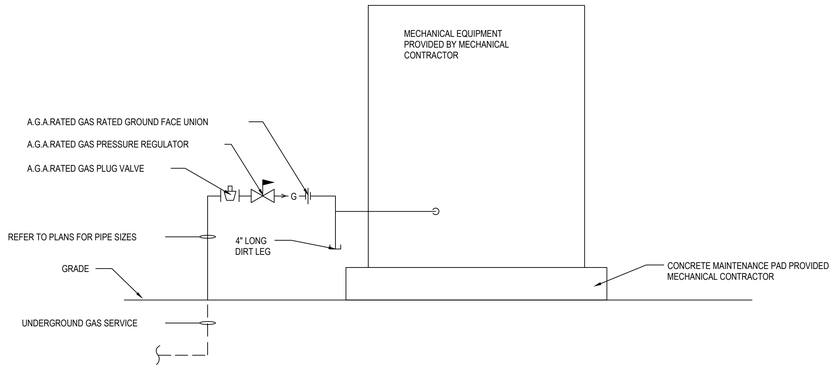

3 / P3.0 TYPICAL GAS EQUIPMENT CONNECTION DETAIL

NOT TO SCALE

PIPE/CONDUIT SUPPORT SIZING CHART						
MANUFACTURER	MODEL NO.	DIMENSIONS			LOAD CAPACITY	REMARKS
		L	W	H		
ERICO	PP50H4	10 1/2"	4"	4"	50 LBS	1,2
ERICO	PP50H6	10 1/2"	4"	6"	50 LBS	1,2
ERICO	PP150H4	12"	12"	4"	150 LBS	1,2
ERICO	PP300H4	21 1/2"	12"	4"	300 LBS	1,2
ERICO	PP50H2AH	10 1/2"	4"	2"	50 LBS	1,2

REMARKS:

1. PIPE/CONDUIT SUPPORT SHALL NOT TO BE ADHERED TO ROOF.
2. MAXIMUM SPACING BETWEEN BLOCKS SHALL BE 10'-0". CALCULATE REQUIRED SPACING PER MANUFACTURERS REQUIREMENTS.

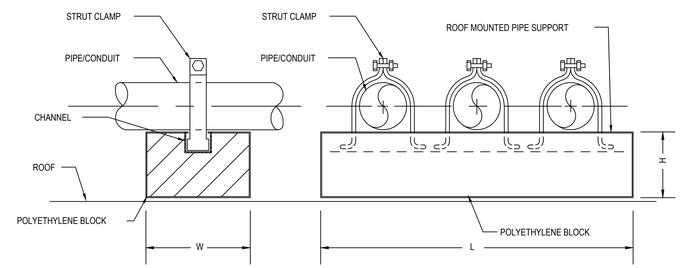

1 / P3.0 ROOF MOUNTED PIPE/CONDUIT SUPPORT DETAIL

NOT TO SCALE

System No. C-AJ-5091

F RATING - 2 HR
T RATING - 1 HR
L RATING AT AMBIENT - 4 CFM/SQ FT
L RATING AT 400 F - LESS THAN 1 CFM/SQ FT

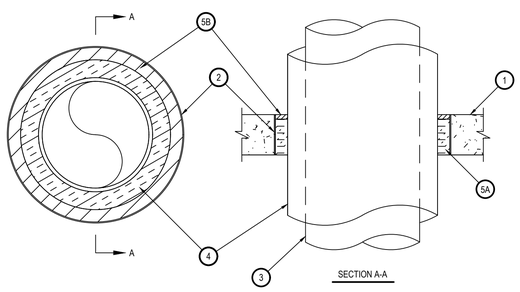

4 / P3.0 PIPE PENETRATION DETAIL - CONCRETE

NOT TO SCALE

1. FLOOR OR WALL ASSEMBLY — MIN 4-1/2 IN. THICK REINFORCED LIGHTWEIGHT OR NORMAL WEIGHT (100-150 PCF) CONCRETE. WALL MAY ALSO BE CONSTRUCTED OF ANY UL CLASSIFIED CONCRETE BLOCKS*. MAX DIAM OF OPENING IS 19-1/2 IN.
2. METALLIC SLEEVE — NOM 20 IN. DIAM (OR SMALLER) SCHEDULE 10 (OR HEAVIER) STEEL PIPE.
3. THROUGH PENETRANTS — ONE METALLIC PIPE OR TUBING TO BE INSTALLED EITHER CONCENTRICALLY OR ECCENTRICALLY WITHIN THE FIRESTOP SYSTEM. PIPE OR TUBING TO BE RIGIDLY SUPPORTED ON BOTH SIDES OF FLOOR OR WALL ASSEMBLY. THE FOLLOWING TYPES AND SIZES OF METALLIC PIPES OR TUBING MAY BE USED:
   A. STEEL PIPE — NOM 12 IN. DIAM (OR SMALLER) SCHEDULE 10 (OR HEAVIER) STEEL PIPE.
   B. IRON PIPE — NOM 12 IN. DIAM (OR SMALLER) CAST OR DUCTILE IRON PIPE.
   C. COPPER PIPE — NOM 6 IN. DIAM (OR SMALLER) REGULAR (OR HEAVIER) COPPER PIPE.
   D. COPPER TUBING — NOM 6 IN. DIAM (OR SMALLER) TYPE L (OR HEAVIER) COPPER TUBING.
4. PIPE COVERING — NOM 2 IN. THICK HOLLOW CYLINDRICAL HEAVY DENSITY (MIN 3.5 PCF) GLASS FIBER UNITS JACKETED ON THE OUTSIDE WITH AN ALL-SERVICE JACKET. LONGITUDINAL JOINTS SEALED WITH METAL FASTENERS OR FACTORY-APPLIED, SELF-SEALING LAP TAPE. TRANSVERSE JOINTS SECURED WITH METAL FASTENERS OR WITH BUTT TAPE SUPPLIED WITH THE PRODUCT. THE ANNULAR SPACE BETWEEN THE INSULATED PIPE AND THE EDGE OF THE PERIPHERY OF THE OPENING SHALL BE MIN 1/2 IN. TO A MAX 2-1/4 IN.
4A. PIPE COVERING — (NOT SHOWN) — AS AN ALTERNATE TO ITEM 4, MAX 2 IN. THICK CYLINDRICAL CALCIUM SILICATE (MIN 14 PCF) UNITS SIZED TO THE OUTSIDE DIAM OF THE PIPE OR TUBE MAY BE USED. PIPE INSULATION SECURED WITH STAINLESS STEEL BANDS OR MIN 8 AWG STAINLESS STEEL WIRE SPACED MAX 12 IN. OC. THE ANNULAR SPACE SHALL BE MIN 1/2 IN. TO MAX 2-1/4 IN.
5. FIRESTOP SYSTEM — THE FIRESTOP SYSTEM SHALL CONSIST OF THE FOLLOWING:
   A. PACKING MATERIAL — MIN 4 IN. THICKNESS OF MIN 4 PCF MINERAL WOOL BATT INSULATION FIRMLY PACKED INTO OPENING AS A PERMANENT FORM. PACKING MATERIAL TO BE RECESSED FROM TOP SURFACE OF FLOOR OR FROM BOTH SURFACES OF WALL AS REQUIRED TO ACCOMMODATE THE REQUIRED THICKNESS OF FILL MATERIAL.
   B. FILL, VOID OR CAVITY MATERIAL* — SEALANT — MIN 1/2 IN. THICKNESS OF FILL MATERIAL APPLIED WITHIN THE ANNULUS, FLUSH WITH TOP SURFACE OF FLOOR OR WITH BOTH SURFACES OF WALL.
   HILTI CONSTRUCTION CHEMICALS, DIV OF HILTI INC — FS-ONE SEALANT
*BEARING THE UL CLASSIFICATION MARK

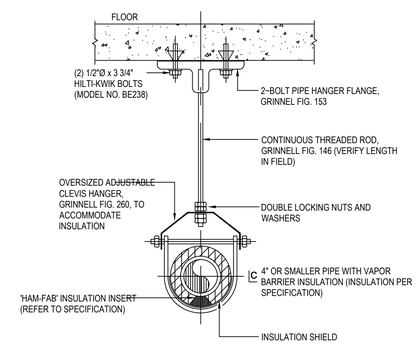

2 / P3.0 PIPE HANGER DETAIL

NO SCALE

VILLAGE OF OAK PARK
CONSTRUCTION DOCUMENT(S)
REVIEWED FOR COMPLIANCE
KEEP A PRINTED APPROVED COPY OF THE PLANS ON SITE AT ALL TIMES FOR CONTRACTORS AND INSPECTORS

625 W Adams Street – 19th Floor
Chicago, IL 60661
312.320.3668

LICENSED PROFESSIONAL ENGINEER
ALEXANDER G. RADKOFF
062-073334
OF ILLINOIS

DESIGN FIRM LIC. NO: 184008703-002
DESIGN FIRM LIC. NO. EXP.: 04.30.2027
ILLINOIS LICENCE NUMBER: 062.073334
LIC. EXP.: 11.30. 2025

1144 Lake Street, LLC

BASE BUILDING MECHANICAL RENOVATIONS

1144 W LAKE ST
OAK PARK, IL 60301

NO.	DESCRIPTION	DATE
1	PERMIT REVISION 1	09/19/2025
	ISSUED FOR PERMIT	08/25/2025

JOB NO.: 25.068

SCALE: AS SHOWN

TITLE: PLUMBING DETAILS

SHEET: P3.1

8/24/2025 4:52:45 PM

TENANT SPACE DEMOLITION

1144 W LAKE ST
OAK PARK, IL 60301

INTERIOR DEMOLITION OF AN EXISTING BASEMENT/FIRST FLOOR TENANT SPACE WITHIN AN EXISTING MIXED-USE 5-STORY BUILDING
TYPE I-B CONSTRUCTION - FULLY SPRINKLERED
GROUP M/A-2/B OCCUPANCY

2 TM 07/29/2025

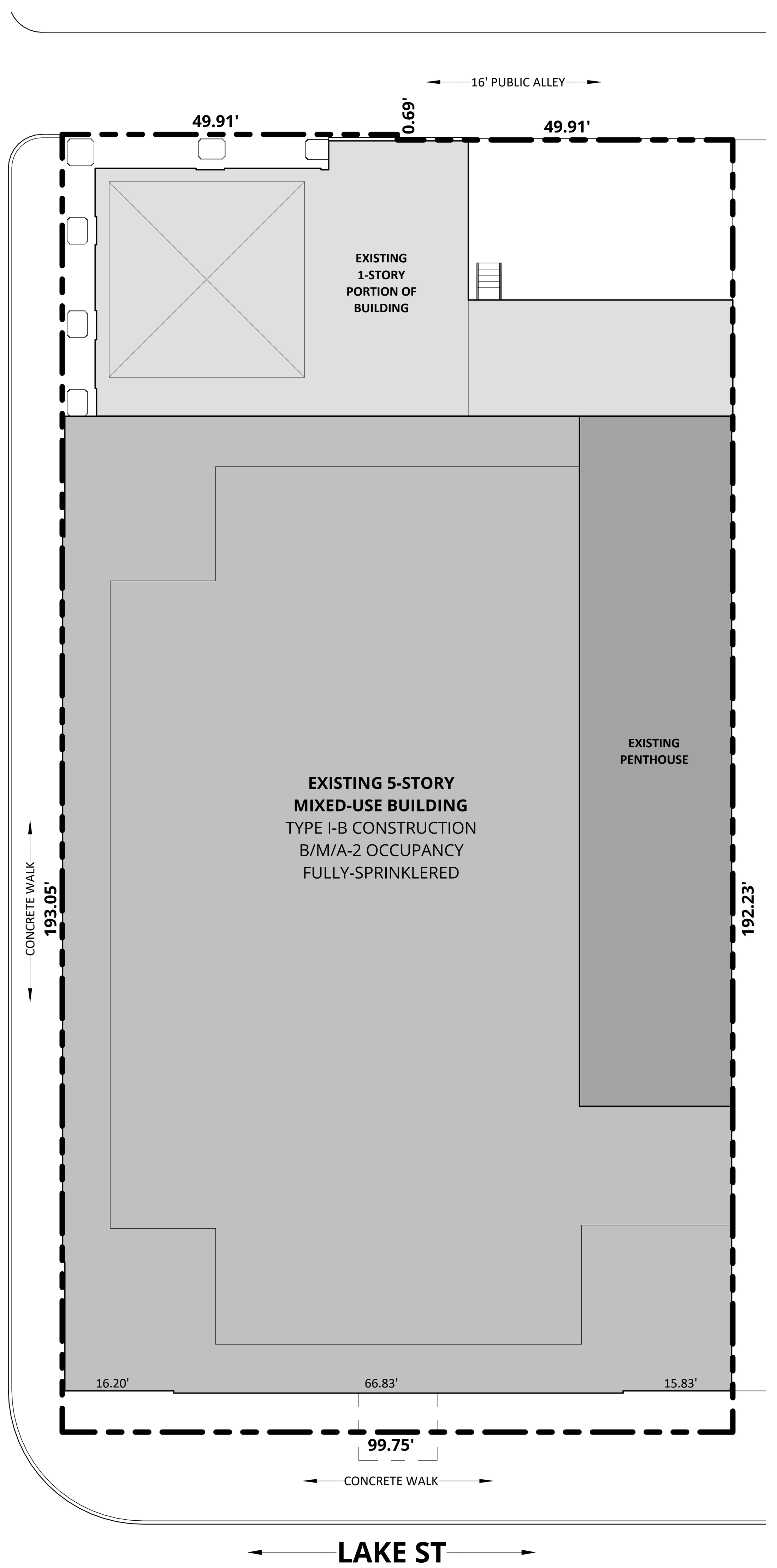

1 SITE PLAN
1/16" = 1'-0"

FIRE ALARM NOTES

1. CONTRACTOR SHALL DESIGN AND BUILD ALTERATIONS FOR A COMPLETE, OPERATING MANUAL AND AUTOMATIC FIRE ALARM SYSTEM FOR THE ENTIRE TENANT SPACE AS REQUIRED. FIRE ALARM SHALL BE INSTALLED IN ACCORDANCE WITH NFPA 72 AND LOCAL ORDINANCES.
2. WORK SHALL BE PERFORMED IN A NEAT WORKMANLIKE MANNER.
3. PROCURE ALL REQUIRED PERMITS AND INSPECTIONS. SUBMIT INSTALLATION DRAWINGS FOR VILLAGE AND FIRE DEPARTMENT APPROVAL. DRAWINGS SHALL BEAR THE SIGNATURE AND SEAL OF AN ILLINOIS REGISTERED PROFESSIONAL ENGINEER. ENTIRE INSTALLATION SHALL BE MADE IN ACCORD WITH REQUIREMENTS OF APPLICABLE NFPA STANDARDS AND THE LOCAL FIRE DEPARTMENT.
4. CONFER WITH THE OTHER TRADES IN THE COORDINATION OF THIS WORK FOR CLEARANCES, CHASES, RECESSES AND OPENINGS REQUIRED.
5. GUARANTEE THE WORK TO BE FREE FROM DEFECTIVE WORKMANSHIP AND MATERIALS FOR A PERIOD OF ONE YEAR FROM DATE OF FINAL CERTIFICATE. ANY REPAIRS OR REPLACEMENT DURING THIS PERIOD SHALL BE MADE WITHOUT COST TO THE OWNER.
6. FIRE PROTECTION CONTRACTOR TO PROVIDE 1/4"=1'-0" SCALE AS-BUILT DRAWINGS TO OWNER.
7. THE PRIMARY AND SECONDARY POWER SUPPLY FOR THE FIRE ALARM SHALL BE PROVIDED IN ACCORDANCE WITH NFPA 72.

SPRINKLER NOTES

1. CONTRACTOR SHALL DESIGN AND BUILD ALTERATIONS FOR A COMPLETE, OPERATING AUTOMATIC WET SPRINKLER SYSTEM FOR THE AREA OF WORK AS REQUIRED TO THE STANDARD OF NFPA 13. PROVIDE NEW MAIN (WHERE REQUIRED), BRANCHES AND SPRINKLER HEADS FOR RENOVATED AREA AND POSITION NEW SPRINKLER HEADS AND SYSTEM COMPONENTS AS REQUIRED BY NFPA, FIRE MARSHAL, AND VILLAGE REQUIREMENTS. REMOVE EXISTING PIPING AND HEADS WHERE NOT USED AND CAP PIPING. EXISTING SPRINKLERS SHALL BE REUSED WHEREVER POSSIBLE.
2. WORK SHALL BE PERFORMED IN A NEAT WORKMANLIKE MANNER.
3. PROCURE ALL REQUIRED PERMITS AND INSPECTIONS. SUBMIT INSTALLATION DRAWINGS FOR BOTH VILLAGE AND FIRE PROTECTION DISTRICT APPROVAL. DRAWINGS SHALL BEAR THE SIGNATURE AND SEAL OF AN ILLINOIS REGISTERED PROFESSIONAL ENGINEER.
4. THIS TRADE SHALL DO ITS OWN CUTTING AND PATCHING.
5. CONFER WITH THE OTHER TRADES IN THE COORDINATION OF THIS WORK FOR CLEARANCES, CHASES, RECESSES AND OPENINGS REQUIRED.
6. GUARANTEE THE WORK TO BE FREE FROM DEFECTIVE WORKMANSHIP AND MATERIALS FOR A PERIOD OF ONE YEAR FROM DATE OF FINAL CERTIFICATE. ANY REPAIRS OR REPLACEMENT DURING THIS PERIOD SHALL BE MADE WITHOUT COST TO THE OWNER.
7. ENTIRE INSTALLATION SHALL BE MADE IN ACCORD WITH REQUIREMENTS OF APPLICABLE NFPA STANDARDS AND THE LOCAL FIRE PREVENTION DEPARTMENT.
8. FIRE SPRINKLER PIPING SHALL BE SCHEDULE 40 BLACK STEEL PIPE, GROOVED OR WELDED.
9. ALL PIPING SHALL BE SUPPORTED AND BRACED IN ACCORDANCE WITH NFPA-13.
10. INSTALL PIPING & EQUIPMENT AS REQUIRED BY NFPA-13.
11. PRESSURE TEST & FLUSH PIPING ACCORDING TO PROCEDURES SET FORTH NFPA. REPAIR ANY DAMAGE TO ANY OTHER WORK CAUSED BY INSTALLATION OR BY LEAKS IN THE FIRE PROTECTION.
12. THE ENTIRE PROJECT AREA SHALL BE PROTECTED WITH AN APPROVED, WET HYDRAULIC CALCULATED AUTOMATIC SPRINKLER SYSTEM. COORDINATE WITH FLOOR CEILING CONSTRUCTION TRADES TO PROVIDE ACCESS TO ALL VALVES AND OTHER EQUIPMENT.
13. PIPE AND FITTINGS SHALL BE IN ACCORDANCE WITH NFPA #13. THE CORROSION RESISTANCE RATION (CRR) OF PIPING SHALL NOT BE LESS THAN 1.0.
14. FINAL SPRINKLER SYSTEM TEST SHALL BE MADE IN ACCORDANCE WITH NFPA #13.
15. FIRE PROTECTION CONTRACTOR TO PROVIDE 1/4"=1'-0" SCALE AS-BUILT DRAWINGS TO OWNER.
16. WORK ON THE FIRE SPRINKLER SYSTEM REQUIRES A SEPARATE PERMIT APPLICATION AND SHOP DRAWINGS SHALL BE SUBMITTED FOR REVIEW AND APPROVAL PRIOR TO ANY INSTALLATION.

ABBREVIATIONS

A/C	AIR CONDITIONING
AFF	ABOVE FINISHED FLOOR
BD	BOARD
BLD	BUILDING
CPT	CARPET
CLG	CEILING
CJ	CONTROL JOINT
CMU	CONCRETE MASONRY UNIT
CONC	CONCRETE
CONT	CONTINUOUS
CO	CLEAN OUT
CW	COLD WATER
CT	CERAMIC TILE
DF	DRINKING FOUNTAIN
DIA	DIAMETER
DIM	DIMENSION
DN	DOWN
DS	DOWNSPOUT
DET	DETAIL
DWG	DRAWING
EA	EACH
EQ	EQUAL
EX OR EXIST	EXISTING
EXT	EXTERIOR
FEC	FIRE EXTINGUISHER CABINET
FHC	FIRE HOSE CABINET
FLR	FLOOR
FD	FLOOR DRAIN
GALV	GALVANIZED
GA	GAUGE
GB	GYPSUM BOARD
HDWR	HARDWARE
H OR HT	HEIGHT
HM	HOLLOW METAL
HW	HOT WATER
MFR	MANUFACTURER
MO	MASONRY OPENING
MTL	METAL
NIC	NOT IN CONTRACT
NTS	NOT TO SCALE
OC	ON CENTER
PT	PAINT
PLAM	PLASTIC LAMINATE
PL	PLATE
R OR RAD	RADIUS
RO	ROUGH OPENING
SHT	SHEET
SIM	SIMILAR
STD	STANDARD
T & G	TONGUE AND GROOVE
T/	TOP
TRANS	TRANSPARENT
TYP	TYPICAL
UNO OR UON	UNLESS NOTED OTHERWISE
VIF	VERIFY IN FIELD
W	WIDTH
WWF	WELDED WIRE FABRIC

PROJECT DIRECTORY

OWNER

1144 LAKE STREET, LLC
415 N LASALLE ST
CHICAGO, IL 60654

ARCHITECT

THOMAS MONTGOMERY ARCHITECT
1701 W 19TH ST
CHICAGO, IL 60608

CONTACT: THOMAS MONTGOMERY
(773) 999-9842
tom@tcmontgomery.com

AREA OF WORK

BASEMENT:	20,110 SF	EXISTING
	1,350 SF	RENOVATED
FIRST FLOOR:	17,050 SF	EXISTING
SECOND FLOOR	14,430 SF	EXISTING
THIRD FLOOR	14,430 SF	EXISTING
FOURTH FLOOR	14,430 SF	EXISTING
FIFTH FLOOR	12,930 SF	EXISTING
PENTHOUSE	2,327 SF	EXISTING
UPPER PENTHOUSE	2,327 SF	EXISTING
TOTAL:	**98,034 SF**	**EXISTING**
	1,350 SF	**RENOVATED**
	LEVEL 2 ALTERATIONS	

SYMBOLS

- ROOM NAME 101 — ROOM REFERENCE
- 1 A8.6 SIM — SECTION REFERENCE
- A8.6 SIM — EXTERIOR ELEVATION
- 1 2 3 4 A-7.1 — INTERIOR ELEVATION
- 1 A-0 — DETAIL / ENLARGED PLAN
- Name Elevation — ELEVATION MARK
- 1 View Name 1/8" = 1'-0" — VIEW TITLE AND NUMBER
- 1 — REVISION CLOUD
- X'-X" — DIMENSION
- ℄ — CENTERLINE
- #.# #.# — COLUMN GRID LINE

2 TM 07/29/2025

PROJECT SCOPE

THE SCOPE FOR THIS PROJECT INCLUDES LANDLORD WORK THAT IS INTERIOR DEMOLITION OF AN EXISTING BASEMENT AND FIRST FLOOR.
DEMOLITION WILL INCLUDE REMOVAL OF PREVIOUS TENANT PARTITIONS AND FIXTURES AS NOTED ON THE PLANS.
ALL OF THE WORK INCLUDED IN THIS SCOPE WILL BE CONDUCTED IN A SINGLE PHASE, HOWEVER THE TENANT BUILD-OUT OF THE SPACE WILL BE PERMITTED SEPERATELY BY OTHERS.

NOTE: NO NEW PLUMBING, FUEL GAS, OR MECHANICAL WORK IS PROPOSED IN THIS SCOPE OF WORK.

LOCATION MAP

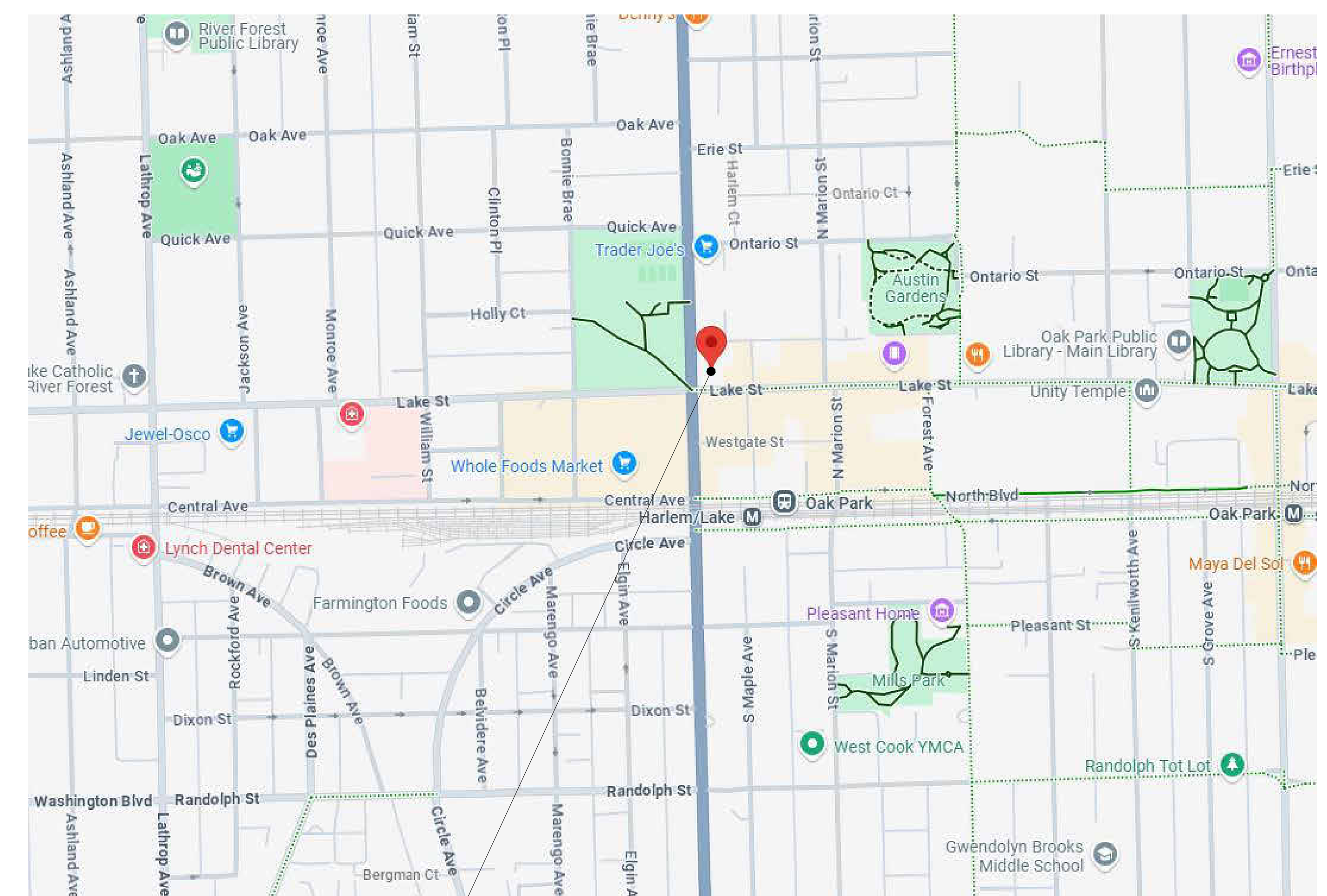

SITE LOCATION

DRAWING INDEX

SHEET NO.	SHEET TITLE	ISSUED FOR PERMIT	PERMIT CORRECTIONS			
G-0	COVER SHEET	•	•			
G-1	EGRESS PLANS & CODE MATRIX	•	•			
D-1.0	BASEMENT DEMOLITION PLAN	•	•			
D-1.1	FIRST FLOOR DEMOLITION PLAN	•	•			

LICENSED ARCHITECT OF RECORD STATEMENT

I HEREBY CERTIFY THAT THESE PLANS HAVE BEEN PREPARED UNDER MY DIRECTION, AND TO THE BEST OF MY KNOWLEDGE AND BELIEFS CONFORM TO THE VILLAGE OF OAK PARK BUILDING CODES AND ORDINANCES.

SIGNED: ______

ILLINOIS LICENSE NUMBER: 001.022640

DATE: 07/29/2025

LICENSED ARCHITECT — THOMAS CLINTON MONTGOMERY — 001.022640 — STATE OF ILLINOIS

AFFIX PROFESSIONAL SEAL HERE

THE DRAWINGS COMPLY WITH THE FOLLOWING CODES:

- **OAK PARK ZONING ORDINANCE**
- **2021 INTERNATIONAL BUILDING CODE W/AMENDMENTS**
- **2021 INTERNATIONAL EXISTING BUILDING CODE (IEBC**
- **2020 NATIONAL ELECTRICAL CODE (NEC) W/AMENDMENTS**
- **2021 INTERNATIONAL FIRE CODE (IFC) W/AMENDMENTS**
- **2021 LLINOIS ENERGY CONSERVATION CODE (IECC)**
- **2021 INTERNATIONAL MECHANICAL CODE (IMC) W/ AMENDMENTS**
- **2021 INTERNATIONAL FUEL GAS CODE (IFGC)**
- **2018 ILLINOIS ACCESSIBILITY CODE (IAC)**
- **2017 ICC A117.1**
- **2014 ILLINOIS PLUMBING CODE (IPC)**

2 TM 07/29/2025

VILLAGE OF OAK PARK
CONSTRUCTION DOCUMENT(S)
REVIEWED FOR COMPLIANCE

These document(s) has been reviewed for conformance with applicable provisions of the codes and ordinances of the Village of Oak Park. The permit process is a check and balance system that normally involves a licensed designer, plans examiner, contractor, and inspector to ensure the best quality and safest construction possible. As much as the mentioned professionals attempt to achieve full code compliance every effort has been made to identify all code deficiencies however; failure to identify a code deficiency during plan review and inspection does not alleviate any obligation to comply with all applicable code provisions. Ultimately the owner and contractor are responsible for full code compliance.

KEEP A PRINTED APPROVED COPY OF THE PLANS ON SITE AT ALL TIMES FOR CONTRACTORS AND INSPECTORS

- Signage is required to provide the address, contractor name and emergency contact information
- Before you dig call J.U.L.I.E @ 811
- Construction hours are 7:00AM through 6:00PM all seven days a week
- Address numbers shall be posted in the front and in the alley of the site (if applicable)
- Trees shall be protected in the parkways; do not block sidewalks or alleyways
- Portable toilets shall be properly maintained a minimum of 10' from the lot line
- Construction fencing shall secure the site and materials(6' high for res. & 8' high for comm. sites)
- Respect the neighboring properties; do not trespass on or damage neighboring properties
- Keep the site clean, safe, organized and free from debris.
- Maintain all guardrails, walkways, ladders and stairs in a safe condition

Any and all changes and/or deviations to the approved plans shall be proposed in writing, in triplicate, for a complete re-review and re-approval.

LICENSED ARCHITECT — THOMAS CLINTON MONTGOMERY — 001.022640 — STATE OF ILLINOIS

07/29/2025

ILLINOIS LICENSE NO: 001.022640
EXPIRATION: 11/30/2026

1144 Lake Street, LLC
TENANT SPACE DEMOLITION

1144 W LAKE ST
OAK PARK, IL 60301

NO.	DESCRIPTION	DATE
2	PERMIT CORRECTIONS	07/29/2025
1	ISSUED FOR PERMIT	07/16/2025

THOMAS MONTGOMERY **ARCHITECT**
www.tcmontgomery.com

1701 W 19TH ST
CHICAGO IL 60608
773.999.9842

tom@tcmontgomery.com

JOB NO.: 25.068

COPYRIGHT **2025**: THOMAS MONTGOMERY ARCHITECT, EXPRESSLY RESERVES ITS COMMON LAW COPYRIGHT AND OTHER PROPERTY RIGHTS IN THESE PLANS. THESE PLANS ARE NOT TO BE REPRODUCED, CHANGED OR COPIED IN ANY FORM OR MANNER WHATSOEVER, NOR ARE THEY TO BE ASSIGNED TO ANY THIRD PARTY, WITHOUT FIRST OBTAINING THE EXPRESSED WRITTEN PERMISSION AND CONSENT OF THOMAS MONTGOMERY.

THESE DRAWINGS MAY HAVE BEEN REPRODUCED AT A SIZE DIFFERENTLY THAN ORIGINALLY DRAWN. OWNER AND ARCHITECT ASSUME NO RESPONSIBILITY FOR USE OF INCORRECT SCALE.

SCALE: As indicated

TITLE: **COVER SHEET**

SHEET: **G-0**

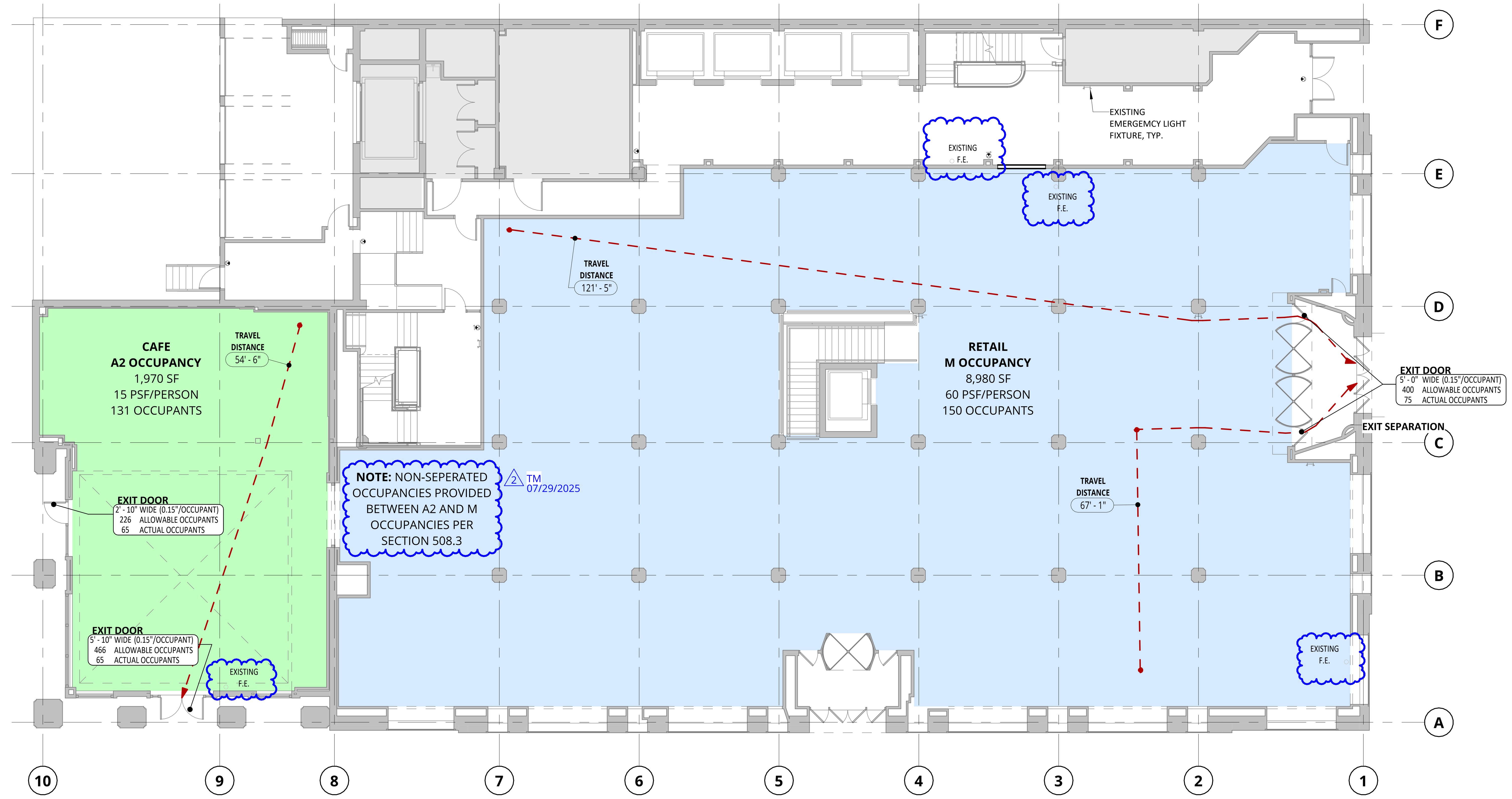

2 FIRST FLOOR EGRESS PLAN
3/32" = 1'-0"

0' 4' 8' 16'

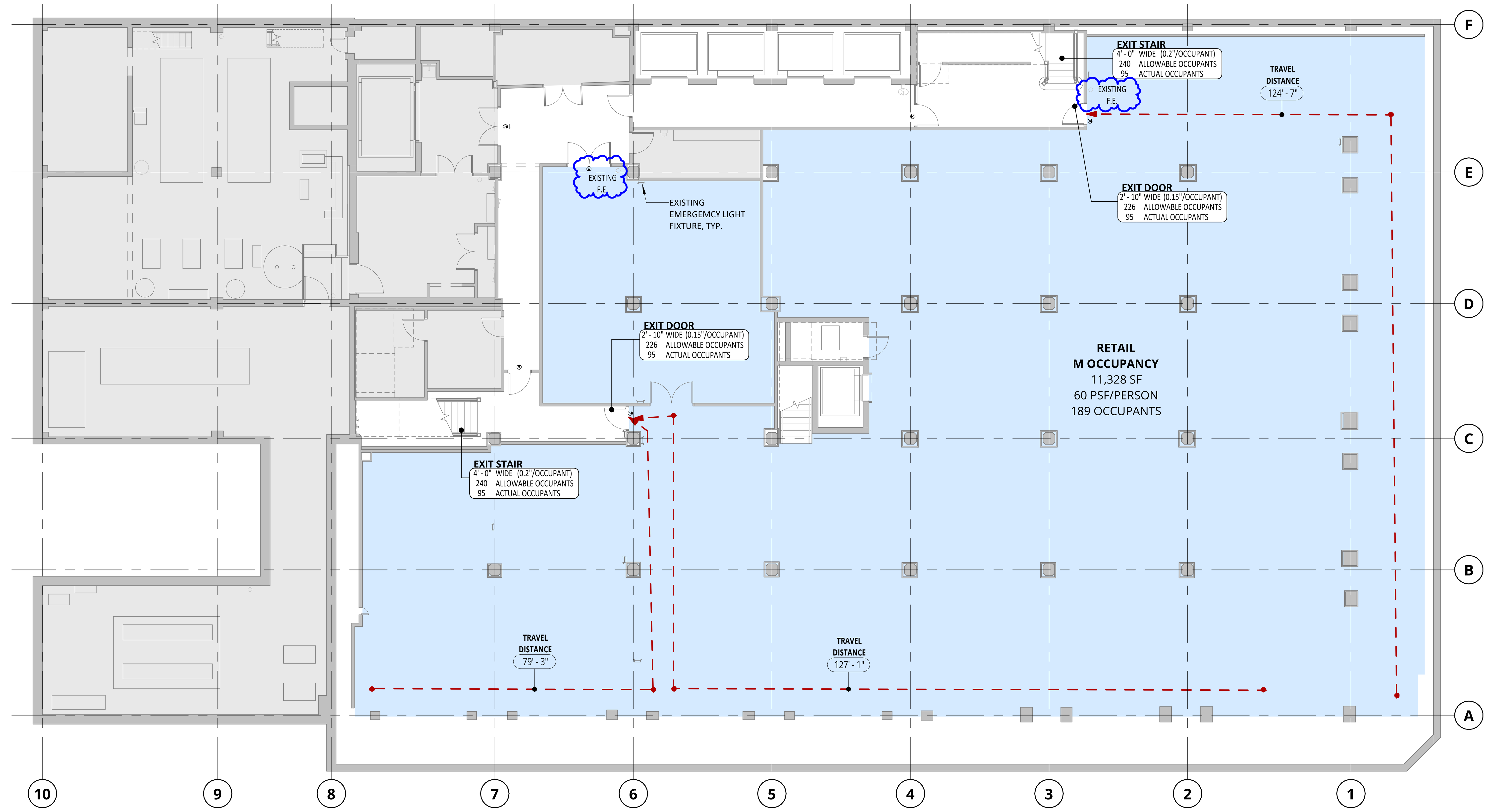

1 BASEMENT EGRESS PLAN
3/32" = 1'-0"

0' 4' 8' 16'

7/31/2025 5:27:42 PM

EXITING AND FIRE SEPARATION LEGEND

- AREA N.I.C.
- NEW CONSTRUCTION
- EXISTING CONSTRUCTION
- 1-HR FIRE-RATED
- 2-HR FIRE-RATED
- 3-HR FIRE-RATED
- EXIT TRAVEL DISTANCE

EXIT
3' - 0" WIDE (0.15"/OCCUPANT)
240 ALLOWABLE OCCUPANTS
0 ACTUAL OCCUPANTS

EXIT COMPONENT TAG

SHEET NOTES

1. ALL DOORS REQUIRED AS EXITS SHALL SWING IN THE DIRECTION OF TRAVEL, U.N.O.
2. DOORS IN ANY POSITION SHALL NOT REDUCE THE WIDTH OF MEANS OF EGRESS BY MORE THAN 25% OF THE REQUIRED WIDTH.
3. ALL DOORS SHALL BE READILY OPERABLE WITHOUT THE USE OF A KEY FROM THE SIDE FROM WHICH EGRESS IS MADE.
4. THE MEANS OF EGRESS HAVE A CEILING HEIGHT OF NOT LESS THAN 7'-6".

2021 INTERNATIONAL BUILDING CODE - CODE MATRIX

ITEM	CHAPTER / ARTICLE	ISSUE	BUILDING CODE REQUIREMENT	ACTUAL PROVIDED	REMARKS
2.1 - OCCUPANCY CLASSIFICATIONS					
BUILDING OCCUPANCY CLASSIFICATIONS	302.1	OCCUPANCY GROUPS	M MERCANTILE A-2 ASSEMBLY	M MERCANTILE A-2 ASSEMBLY	
ACESSORY OCCUPANCIES	508.2	ACCESSORY OCCUPANCIES SHALL NOT OCCUPY MORE THAN 25% OF THE FLOOR AREA OR 5% OF THE TOTAL AREA	ACCESSORY OCCUPANCIES NOT REQUIRED TO BE SEPERATED	N/A	
NON-SEPARATED OCCUPANCIES	508.3	THE MOST RESTRICTIVE PROVISIONS OF EACH CLASSIFICATION SHALL APPLY	NON-SEPARATED OCCUPANCIES NOT REQUIRED TO BE SEPARATED	PROVIDED, MOST RESTRICTIVE OCCUPANCY GOVERNS	
SEPERATED OCCUPANCIES	508.4	FIRE SEPARATION REQUIREMENTS FOR MIXED OCCUPANCY SEPARATIONS	M MERCANTILE & A-2 ASSEMBLY: 1	N/A	
2.2 - ALLOWABLE BUILDING HEIGHTS & AREAS					
ALLOWABLE HEIGHT	504	HEIGHT AND STORY LIMITATIONS BASED ON CONSTRUCTION TYPE: I-B	M MERCANTILE: 12 STORIES - 180 FT A-2 ASSEMBLY : 12 STORIES - 180 FT	5-STORIES - 90'-0"	
ALLOWABLE AREA	506	AREA LIMITATIONS BASED ON CONSTRUCTION TYPE: I-B	M MERCANTILE: NO LIMIT A-2 ASSEMBLY: NO LIMIT	MAX. PROVIDED FLOOR AREA: 17050 SF, TOTAL BUILDING AREA: 73270 SF	
FRONTAGE INCREASE	506.3	AREA CAN BE INCREASED IF PERIMETER FRONTING A YARD OR PUBLIC WAY IS GREATER THAN 20 FT WIDE AND IS GREATER THAN 25% OF THE BUILDING PERIMETER	N/A	N/A	
2.3 - BUILDING CONSTRUCTION TYPE					
TYPE OF CONSTRUCTION	601	BUILDING CONSTRUCTION TYPE	TYPE I-B	TYPE I-B	
REQUIRED FIRE-RESISTANCE RATINGS FOR BUILDING ELEMENTS	TABLE 601	PRIMARY STRUCTURAL FRAME	2-HR	2-HR	NOT LESS THAN FIRE RATINGS NASED ON FIRE SEPERATION DISTANCE
		EXTERIOR BEARING WALLS	2-HR	2-HR	
		INTERIOR BEARING WALLS	2-HR	2-HR	
		EXTERIOR NON-BEARING WALLS	PER TABLE 602		
		INTERIOR NON-BEARING WALLS	0-HR	0-HR	
		FLOOR CONSTRUCTION	2-HR	2-HR	
		ROOF CONSTRUCTION	1-HR	1-HR	
FIRE-RESISTANCE RATING REQUIREMENTS FOR EXTERIOR WALLS BASED ON FIRE SEPARATION DISTANCE	TABLE 705.5	NORTH WALL	16 FT - 1-HR	2-HR	THE REQUIRED RATING FOR ANY EXTERIOR WALL WITH A SEPERATION DISTANCE OF 10 FT OR GREATER SHALL ONLY BE REQUIRED TO BE RATED ON THE INSIDE OF WALL.
		SOUTH WALL	30 FT - 0-HR	2-HR	
		WEST WALL	30 FT - 0-HR	2-HR	ANY EXTERIOR WALL WITH A FIRE SEPARATION DISTANCE OF LESS THAN 3 FT SHALL BE 2 HR RATED AND CONSTRUCTED OF NON-COBUSTIBLE MATERIALS.
		EAST WALL	0 FT - 2-HR	2-HR	
COMBUSTIBLE MATERIALS	603	ALL MATERIALS IN CONSTRUCTION TYPES I & II AND EXTERIOR WALLS IN CONSTRUCTION TYPE III SHALL BE CONSTRUCTED OF NON-COMBUSTIBLE MATERIALS	REQUIRED	PROVDED	
2.4 - FIRE AND SMOKE PROTECTION FEATURES					
MAXIMUM AREA OF WALL OPENINGS	TABLE 705.8	NORTH WALL	75%	EXISTING PROVIDED	BUILDINGS WHOSE EXTERIOR BEARING WALLS, EXTERIOR NON-BEARING WALLS, AND EXTERIOR PRIMARY STRUCTURAL FRAME ARE NOT REQUIRED TO BE FIRE-RESISTANCE RATED SHALL BE PERMITTED TO HAVE UNLIMITED OPENINGS.
		SOUTH WALL	NO LIMIT	EXISTING PROVIDED	
		WEST WALL	NO LIMIT	EXISTING PROVIDED	
		EAST WALL	NOT PERMITTED	EXISTING PROVIDED	
2.5 - INTERIOR FINISHES					
INTERIOR WALL AND CEILING FINISH REQUIREMENTS BY OCCUPANCY	TABLE 803.13	INTERIOR EXIT STAIRWAYS, RAMPS. AND EXIT PASSAGEWAYS	CLASS A	CLASS A	
		CORRIDORS, EXIT ACCESS STAIRWAYS ENCLOSURES	CLASS C	CLASS C	
		ROOMS AND ENCLOSED SPACES	CLASS C	CLASS C	
2.6 - FIRE PROTECTION SYSTEMS					
SPRINKLER REQUIREMENTS	903	M MERCANTILE	REQUIRED	SPRINKLERS PROVIDED	
2.7 -MEANS OF EGRESS					
CEILING HEIGHT	1003.2	THE MEANS OF EGRESS SHALL HAVE A CEILING HEIGHT OF NOT LESS THAN 7'-6"	REQUIRED	PROVIDED	SEE EGRESS PLANS
OCCUPANT LOAD	1004	MAXIMUM FLOOR AREA ALLOWANCES PER OCCUPANT	OCCUPANT LOAD DETERMINED BY OCCUPANCY USE PER TABLE 1004.5	PROVIDED	
MEANS OF EGRESS SIZING - REQUIRED SIZE BASED ON OCCUPANT LOAD	1005.3.1	STAIRWAY WIDTH	SPRINKLERED - 0.2"PER OCCUPANT	PROVIDED	
	1005.3.2	OTHER EGRESS COMPONENT WIDTH	SPRINKLERED - 0.15"PER OCCUPANT	PROVIDED	
MINIMUMNUMBER OF EXITS AND EXIT ACCESS DOORWAYS	1006	TWO EXITS SHALL BE PROVIDED FROM EACH SPACE WHERE THE DESIGN OCCUPANT LOAD OR COMMON PATH OF TRAVEL EXCEED VALUES OF TABLE 1006.2	MAX OCCUPANT LOAD: M MERCANTILE: 49 OCCUPANTS A-2 ASSEMBLY: 49 OCCUPANTS	PROVIDED	
			MAX COMMON PATH: M MERCANTILE: 115 FT A-2 ASSEMBLY: 75 FT	PROVIDED	
MINIMUM NUMBER OF EXITS PER STORY	1006.3.2	MINIMUM NUMBER OF EXITS PER STORY: 1-500 OCCUPANTS, 2; 501-1,000 OCCUPANTS, 3; MORE THAN 1,000 OCCUPANTS, 4.	2 EXITS PER STORY REQUIRED	PROVIDED	
EXIT ACCESS CONFIGURATION	1007.1	WHERE TWO EXITS ARE REQUIRED, EXITS SHALL BE SEPARATED	EXITS SHALL BE NO MORE THAN 1/3 THE MAX. TOTAL DIAGONAL LENGTH OF THE BUILDING OR AREA SERVED.	PROVIDED	

Oak Park
VILLAGE OF OAK PARK
CONSTRUCTION DOCUMENT(S)
REVIEWED FOR COMPLIANCE
These document(s) has been reviewed for conformance with applicable provisions of the codes and ordinances of the Village of Oak Park. The permit process is a check and balance system that normally involves a licensed designer, plans examiner, contractor, and inspector to ensure the best quality and safest construction possible. As much as the mentioned professionals attempt to achieve full code compliance every effort has been made to identify all code deficiencies however; failure to identify a code deficiency during plan review and inspection does not alleviate any obligation to comply with all applicable code provisions. Ultimately the owner and contractor are responsible for full code compliance.
KEEP A PRINTED APPROVED COPY OF THE PLANS ON SITE AT ALL TIMES FOR CONTRACTORS AND INSPECTORS
- Signage is required to provide the address, contractor name and emergency contact information
- Before you dig call J.U.L.I.E @ 811
- Construction hours are 7:00AM through 6:00PM all seven days a week
- Address numbers shall be posted in the front and in the alley of the site (if applicable)
- Trees shall be protected in the parkways; do not block sidewalks or alleyways
- Portable toilets shall be properly maintained a minimum of 10' from the lot line
- Construction fencing shall secure the site and materials(6' high for res. & 8' high for comm. sites)
- Respect the neighboring properties; do not trespass on or damage neighboring properties
- Keep the site clean, safe, organized and free from debris.
- Maintain all guardrails, walkways, ladders and stairs in a safe condition

Any and all changes and/or deviations to the approved plans shall be proposed in writing, in triplicate, for a complete re-review and re-approval.

LICENSED ARCHITECT
THOMAS CLINTON MONTGOMERY
001.022640
STATE OF ILLINOIS

07/29/2025

ILLINOIS LICENSE NO: 001.022640
EXPIRATION: 11/30/2026

1144 Lake Street, LLC

TENANT SPACE DEMOLITION

1144 W LAKE ST
OAK PARK, IL 60301

NO.	DESCRIPTION	DATE
2	PERMIT CORRECTIONS	07/29/2025
1	ISSUED FOR PERMIT	07/16/2025

THOMAS
MONTGOMERY
ARCHITECT
www.tcmontgomery.com

1701 W 19TH ST
CHICAGO IL 60608
773.999.9842

tom@tcmontgomery.com

JOB NO.: 25.068

COPYRIGHT **2025**: THOMAS MONTGOMERY ARCHITECT, EXPRESSLY RESERVES ITS COMMON LAW COPYRIGHT AND OTHER PROPERTY RIGHTS IN THESE PLANS. THESE PLANS ARE NOT TO BE REPRODUCED, CHANGED OR COPIED IN ANY FORM OR MANNER WHATSOEVER, NOR ARE THEY TO BE ASSIGNED TO ANY THIRD PARTY, WITHOUT FIRST OBTAINING THE EXPRESSED WRITTEN PERMISSION AND CONSENT OF THOMAS MONTGOMERY.

THESE DRAWINGS MAY HAVE BEEN REPRODUCED AT A SIZE DIFFERENTLY THAN ORIGINALLY DRAWN. OWNER AND ARCHITECT ASSUME NO RESPONSIBILITY FOR USE OF INCORRECT SCALE.

SCALE: As indicated

TITLE: **EGRESS PLANS & CODE MATRIX**

SHEET: **G-1**

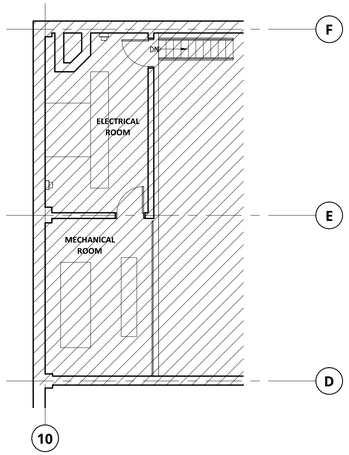

2 **BOILER MEZZANINE DEMOLITION PLAN**
1/8" = 1'-0"

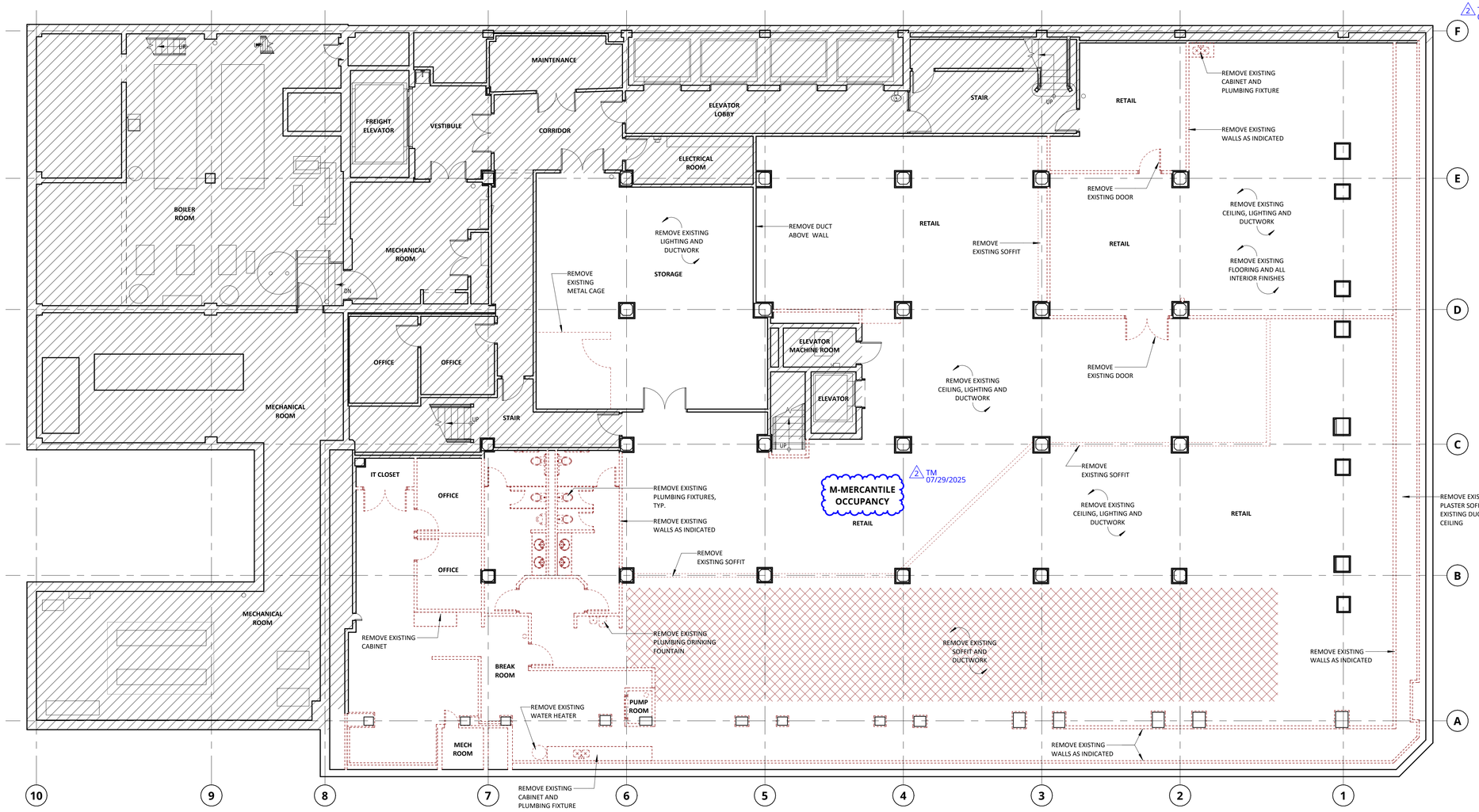

1 **BASEMENT DEMOLITION PLAN**
1/8" = 1'-0"

DEMOLITION LEGEND

CONSTRUCTION TO BE DEMOLISHED

EXISTING CONSTRUCTION TO REMAIN

AREA N.I.C.

SHEET NOTES

1. ALL EXISTING WORK TO REMAIN, U.O.N.
2. WHERE DEMOLITION OCCURS, ALL PARTITIONS TO REMAIN ARE TO BE PATCHED AND PREPARED FOR NEW FINISHES.
3. GC TO NOTIFY ARCHITECT, IN WRITING, OF ANY DISCREPANCY IN THE PLANS.
4. AT ALL AREAS WHERE ELECTRICAL/TELE/DATA ARE REMOVED, POWER IS TO BE CUT AND ALL CABLING IS TO BE PULLED BACK TO SOURCE. DO NOT LEAVE ABANDONED JUNCTION BOXES OR BLANK COVER PLATES.
5. GENERAL CONTRACTOR IS TO VERIFY ALL WALLS BEING REMOVED ARE NON LOAD-BEARING. NOTIFY ARCHITECT IMMEDIATELY IF THERE IS ANY DISCREPANCY. NO LOAD-BEARING WALLS ARE TO BE REMOVED.
6. ALL EXISTING WALL COVERINGS, TILE AND WALL TREATMENTS ARE TO BE REMOVED THROUGHOUT, U.N.O.
7. ALL EXISTING FLOORING IS TO BE REMOVED THROUGHOUT, U.N.O. ALL EXISTING GLUE AND OTHER RESIDE SHALL BE REMOVED AND PREPPED FOR NEW FINISHES.
8. ALL DROPPED CEILINGS ARE TO BE REMOVED, U.N.O. REMOVE ALL WIRING AND SUPPORTS, CLEAN & PREPARE FOR NEW WORK. ALL DROPPED DRYWALL CEILINGS, SOFFITS AND BULKHEADS ARE TO BE REMOVED, U.N.O.
9. IF ASBESTOS OR OTHER HAZARDOUS MATERIALS ARE DISCOVERED DURING DEMOLITION, THE CONTRACTOR SHALL NOTIFY THE OWNER AND THE VILLAGE OF OAK PARK IN WRITING, THEN WAIT FOR DIRECTION FROM THE OWNER.
10. STORAGE OF REMOVED ITEMS WILL BE PERMITTED AS DIRECTED BY THE OWNER.
11. PROVIDE PROTECTIVE BARRICADES, PROTECTIVE CANOPIES, AND OTHER FORMS OF PROTECTION AS REQUIRED TO PROTECT OWNER'S PERSONNEL AND GENERAL PUBLIC FROM INJURY DUE TO DEMOLITION WORK.
12. COVER AND PROTECT FURNITURE, EQUIPMENT, FIXTURES, AND OTHER ITEMS TO REMAIN FROM SOILING OR DAMAGE DURING DEMOLITION WORK.
13. PROTECT FLOORS AND OTHER FINISHES TO REMAIN WITH SUITABLE COVERINGS WHEN NECESSARY.
14. CONSTRUCT TEMPORARY DUST-PROOF PARTITIONS WHERE REQUIRED TO SEPARATE AREAS WHERE NOISY OR EXTENSIVE DIRT OR DUST OPERATIONS ARE PERFORMED. EQUIP PARTITIONS WITH DUST-PROOF DOORS AND SECURITY LOCKS IF REQUIRED. USE TEMPORARY ENCLOSURES AND OTHER SUITABLE METHODS TO ISOLATE DUST AND DIRT RISING AND SCATTERING. COMPLY WITH BUILDING MANAGEMENT REGULATIONS AND GOVERNING REGULATIONS PERTAINING TO ENVIRONMENTAL PROTECTION.
15. PROVIDE TEMPORARY WEATHER PROTECTION WHEN APPLICABLE DURING INTERVAL BETWEEN DEMOLITION AND REMOVAL OF EXISTING CONSTRUCTION ON EXTERIOR SURFACES AND INSTALLATION OF NEW CONSTRUCTION TO ENSURE THAT NO WATER LEAKAGE OR DAMAGE OCCURS TO THE STRUCTURE OR INTERIOR AREAS OF THE EXISTING BUILDING. REMOVE PROTECTIONS AT COMPLETION OF WORK.
16. PROMPTLY REPAIR DAMAGES CAUSED TO ADJACENT FACILITIES BY DEMOLITION WORK AT NO ADDITIONAL COST TO OWNER.
17. CONDUCT DEMOLITION OPERATIONS AND DEBRIS REMOVAL IN A MANNER TO ENSURE MINIMUM INTERFERENCE WITH ROADS, STREETS, WALKS, CORRIDORS, AND OTHER ADJACENT OCCUPIED OR USED FACILITIES.
18. IDENTIFY, KEEP IN SERVICE, AND PROTECT AGAINST DAMAGE ALL UTILITIES AND FIRE PROTECTION SYSTEMS TO REMAIN DURING DEMOLITION OPERATIONS. PROVIDE TEMPORARY LIGHT AND POWER AS REQUIRED. REMOVE TO SOURCE ALL PIPES, VENTS, APPLIANCES, OR DRAINS NOT BEING REUSED.
19. CONTRACTOR IS SOLELY RESPONSIBLE FOR ANY INTERIOR AND EXTERIOR SHORING, BRACING, OR SUPPORT TO PREVENT MOVEMENT, SETTLEMENT, OR COLLAPSE OF STRUCTURES TO BE DEMOLISHED AND ADJACENT FACILITIES TO REMAIN.
20. CONTRACTOR IS SOLELY RESPONSIBLE FOR DEMOLITION MEANS AND METHODS.
21. AT THE COMPLETION OF DEMOLITION WORK, CONSTRUCTION AREAS SHALL BE LEFT IN A CLEAN CONDITION. ALL DEBRIS AND MISCELLANEOUS MATERIAL SHALL BE REMOVED AT THE END OF EACH WORK DAY.
22. REMOVE TO SOURCE ALL ANCILLARY PIPES, VENTS, APPLIANCES AND DRAINS SCHEDULED FOR DEMOLITION. WHERE APPLICABLE, CAP AT RISER AND PROVIDE UL APPROVED FIRESTOPPING AT PENETRATIONS THROUGH FIRE-RATED ASSEMBLIES.
23. DEMOLITION IS NOT NECESSARILY LIMITED TO WHAT IS SHOWN ON DRAWINGS. THE INTENT IS TO INDICATE THE GENERAL SCOPE OF DEMOLITION REQUIRED TO COMPLETE THE SCOPE OF WORK. IF QUESTIONS ARISE AS TO THE REMOVAL OF ANY MATERIAL IN ACCORDANCE WITH THE CONTRACT DOCUMENTS, CLARIFY THE POINT IN QUESTION WITH THE ARCHITECT BEFORE PROCEEDING.
24. STAIRWAYS AND A CLEAR PATH OF EGRESS MUST REMAIN ACCESSIBLE AT ALL TIMES DURING DEMOLITION.
25. ALL DEMOLITION DURING CONSTRUCTION SHALL FOLLOW THE 2021 INTERNATIONAL FIRE CODE CHAPTER 33: FIRE SAFETY DURING CONSTRUCTION AND DEMOLITION.

2 TM 07/29/2025

VILLAGE OF OAK PARK
CONSTRUCTION DOCUMENT(S)
REVIEWED FOR COMPLIANCE
Date: 07/29/2025
Approved: Building Commissioner
Comments: See approved plans, permit and inspection card for conditions.
KEEP A PRINTED APPROVED COPY OF THE PLANS ON SITE AT ALL TIMES FOR CONTRACTORS AND INSPECTORS
- Signage is required to provide the address, contractor name and emergency contact information at the site in accordance with 15.12.110 of the Code.
- Construction hours are 7:00AM through 8:00PM at permit date is issued.
- Address numbers shall be posted to the front and in the alley of the site (if applicable) in accordance with the Village's requirements and shall be maintained throughout the project.
- Portable toilets shall be properly maintained a minimum of 10' from the lot line.
- Construction fencing shall square the site and maintained 'tight' for sec. 6.12 sign to stakes, where required. Fencing shall be maintained throughout the duration of the project and properties kept free of litter, weeds, rubbish and free from debris.
- Sidewalks and parkways must remain open and free from debris.
Any and all changes and/or revisions to the approved plans shall be processed in writing in triplicate, for a complete in-review and re-approval.

LICENSED ARCHITECT
THOMAS CLINTON MONTGOMERY
001.022640
STATE OF ILLINOIS
07/29/2025

ILLINOIS LICENSE NO: 001.022640
EXPIRATION: 11/30/2026

1144 Lake Street, LLC

TENANT SPACE DEMOLITION

1144 W LAKE ST
OAK PARK, IL 60301

NO.	DESCRIPTION	DATE
2	PERMIT CORRECTIONS	07/29/2025
1	ISSUED FOR PERMIT	07/16/2025

THOMAS MONTGOMERY
ARCHITECT
www.tcmontgomery.com

1701 W 19TH ST
CHICAGO IL 60608
773.999.9842

tom@tcmontgomery.com

JOB NO.: 25.068

COPYRIGHT **2025**: THOMAS MONTGOMERY ARCHITECT, EXPRESSLY RESERVES ITS COMMON LAW COPYRIGHT AND OTHER PROPERTY RIGHTS IN THESE PLANS. THESE PLANS ARE NOT TO BE REPRODUCED, CHANGED OR COPIED IN ANY FORM OR MANNER WHATSOEVER, NOR ARE THEY TO BE ASSIGNED TO ANY THIRD PARTY, WITHOUT FIRST OBTAINING THE EXPRESSED WRITTEN PERMISSION AND CONSENT OF THOMAS MONTGOMERY.

THESE DRAWINGS MAY HAVE BEEN REPRODUCED AT A SIZE DIFFERENTLY THAN ORIGINALLY DRAWN. OWNER AND ARCHITECT ASSUME NO RESPONSIBILITY FOR USE OF INCORRECT SCALE.

SCALE: 1/8" = 1'-0"

TITLE: **BASEMENT DEMOLITION PLAN**

SHEET: **D-1.0**

7/31/2025 5:27:43 PM

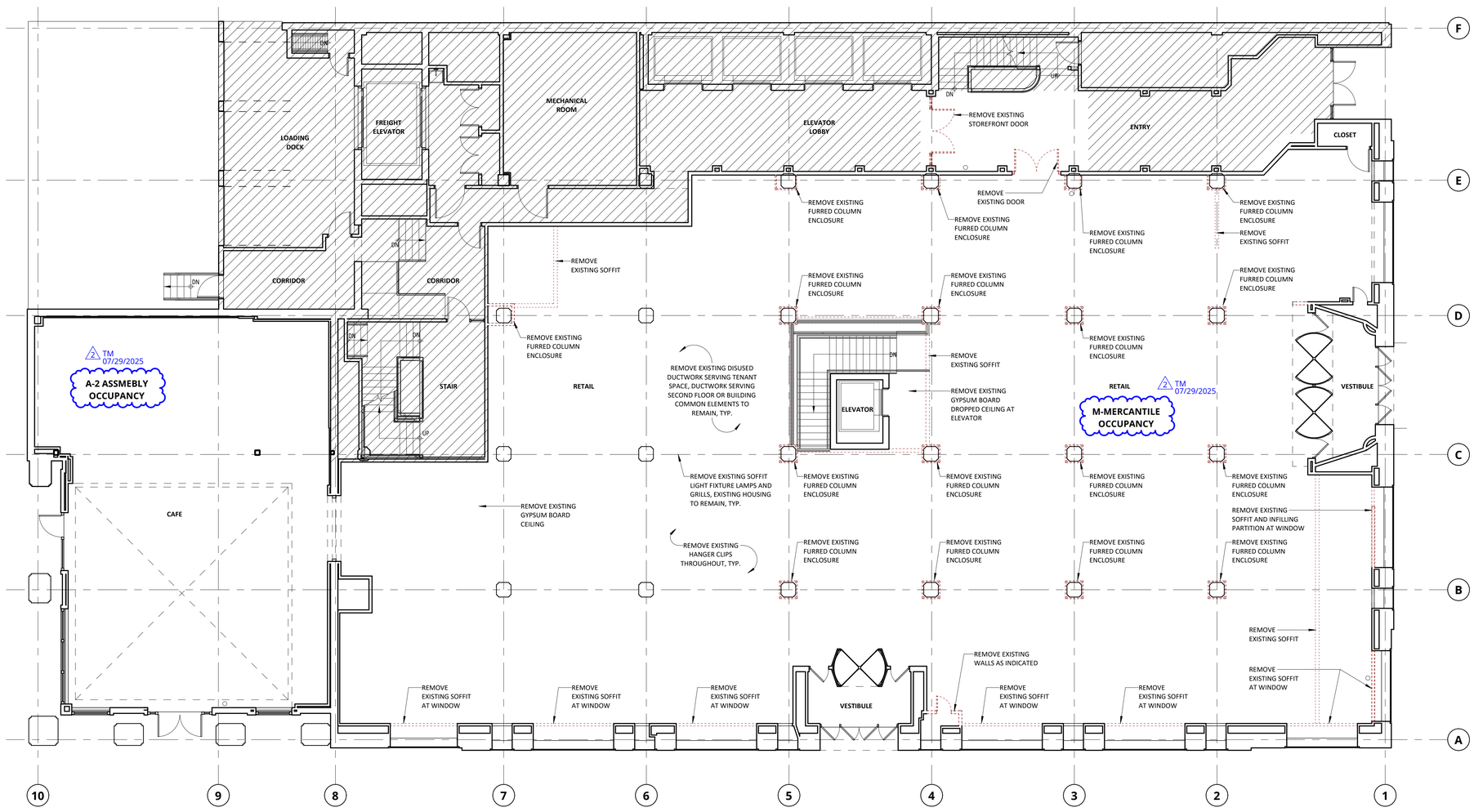

1 **FIRST FLOOR DEMOLITION PLAN**
1/8" = 1'-0"

DEMOLITION LEGEND

CONSTRUCTION TO BE DEMOLISHED

EXISTING CONSTRUCTION TO REMAIN

AREA N.I.C.

SHEET NOTES

1. ALL EXISTING WORK TO REMAIN, U.O.N.
2. WHERE DEMOLITION OCCURS, ALL PARTITIONS TO REMAIN ARE TO BE PATCHED AND PREPARED FOR NEW FINISHES.
3. GC TO NOTIFY ARCHITECT, IN WRITING, OF ANY DISCREPANCY IN THE PLANS.
4. AT ALL AREAS WHERE ELECTRICAL/TELE/DATA ARE REMOVED, POWER IS TO BE CUT AND ALL CABLING IS TO BE PULLED BACK TO SOURCE. DO NOT LEAVE ABANDONED JUNCTION BOXES OR BLANK COVER PLATES.
5. GENERAL CONTRACTOR IS TO VERIFY ALL WALLS BEING REMOVED ARE NON LOAD-BEARING. NOTIFY ARCHITECT IMMEDIATELY IF THERE IS ANY DISCREPANCY. NO LOAD-BEARING WALLS ARE TO BE REMOVED.
6. ALL EXISTING WALL COVERINGS, TILE AND WALL TREATMENTS ARE TO BE REMOVED THROUGHOUT, U.N.O.
7. ALL EXISTING FLOORING IS TO BE REMOVED THROUGHOUT, U.N.O. ALL EXISTING GLUE AND OTHER RESIDE SHALL BE REMOVED AND PREPPED FOR NEW FINISHES.
8. ALL DROPPED CEILINGS ARE TO BE REMOVED, U.N.O. REMOVE ALL WIRING AND SUPPORTS, CLEAN & PREPARE FOR NEW WORK. ALL DROPPED DRYWALL CEILINGS, SOFFITS AND BULKHEADS ARE TO BE REMOVED, U.N.O.

2 TM 07/29/2025

9. IF ASBESTOS OR OTHER HAZARDOUS MATERIALS ARE DISCOVERED DURING DEMOLITION, THE CONTRACTOR SHALL NOTIFY THE OWNER AND THE VILLAGE OF OAK PARK IN WRITING, THEN WAIT FOR DIRECTION FROM THE OWNER.
10. STORAGE OF REMOVED ITEMS WILL BE PERMITTED AS DIRECTED BY THE OWNER.
11. PROVIDE PROTECTIVE BARRICADES, PROTECTIVE CANOPIES, AND OTHER FORMS OF PROTECTION AS REQUIRED TO PROTECT OWNER'S PERSONNEL AND GENERAL PUBLIC FROM INJURY DUE TO DEMOLITION WORK.
12. COVER AND PROTECT FURNITURE, EQUIPMENT, FIXTURES, AND OTHER ITEMS TO REMAIN FROM SOILING OR DAMAGE DURING DEMOLITION WORK.
13. PROTECT FLOORS AND OTHER FINISHES TO REMAIN WITH SUITABLE COVERINGS WHEN NECESSARY.
14. CONSTRUCT TEMPORARY DUST-PROOF PARTITIONS WHERE REQUIRED TO SEPARATE AREAS WHERE NOISY OR EXTENSIVE DIRT OR DUST OPERATIONS ARE PERFORMED. EQUIP PARTITIONS WITH DUST-PROOF DOORS AND SECURITY LOCKS IF REQUIRED. USE TEMPORARY ENCLOSURES AND OTHER SUITABLE METHODS TO ISOLATE DUST AND DIRT RISING AND SCATTERING. COMPLY WITH BUILDING MANAGEMENT REGULATIONS AND GOVERNING REGULATIONS PERTAINING TO ENVIRONMENTAL PROTECTION.
15. PROVIDE TEMPORARY WEATHER PROTECTION WHEN APPLICABLE DURING INTERVAL BETWEEN DEMOLITION AND REMOVAL OF EXISTING CONSTRUCTION ON EXTERIOR SURFACES AND INSTALLATION OF NEW CONSTRUCTION TO ENSURE THAT NO WATER LEAKAGE OR DAMAGE OCCURS TO THE STRUCTURE OR INTERIOR AREAS OF THE EXISTING BUILDING. REMOVE PROTECTIONS AT COMPLETION OF WORK.
16. PROMPTLY REPAIR DAMAGES CAUSED TO ADJACENT FACILITIES BY DEMOLITION WORK AT NO ADDITIONAL COST TO OWNER.
17. CONDUCT DEMOLITION OPERATIONS AND DEBRIS REMOVAL IN A MANNER TO ENSURE MINIMUM INTERFERENCE WITH ROADS, STREETS, WALKS, CORRIDORS, AND OTHER ADJACENT OCCUPIED OR USED FACILITIES.
18. IDENTIFY, KEEP IN SERVICE, AND PROTECT AGAINST DAMAGE ALL UTILITIES AND FIRE PROTECTION SYSTEMS TO REMAIN DURING DEMOLITION OPERATIONS. PROVIDE TEMPORARY LIGHT AND POWER AS REQUIRED. REMOVE TO SOURCE ALL PIPES, VENTS, APPLIANCES, OR DRAINS NOT BEING REUSED.
19. CONTRACTOR IS SOLELY RESPONSIBLE FOR ANY INTERIOR AND EXTERIOR SHORING, BRACING, OR SUPPORT TO PREVENT MOVEMENT, SETTLEMENT, OR COLLAPSE OF STRUCTURES TO BE DEMOLISHED AND ADJACENT FACILITIES TO REMAIN.
20. CONTRACTOR IS SOLELY RESPONSIBLE FOR DEMOLITION MEANS AND METHODS.
21. AT THE COMPLETION OF DEMOLITION WORK, CONSTRUCTION AREAS SHALL BE LEFT IN A CLEAN CONDITION. ALL DEBRIS AND MISCELLANEOUS MATERIAL SHALL BE REMOVED AT THE END OF EACH WORK DAY.
22. REMOVE TO SOURCE ALL ANCILLARY PIPES, VENTS, APPLIANCES AND DRAINS SCHEDULED FOR DEMOLITION. WHERE APPLICABLE, CAP AT RISER AND PROVIDE UL APPROVED FIRESTOPPING AT PENETRATIONS THROUGH FIRE-RATED ASSEMBLIES.
23. DEMOLITION IS NOT NECESSARILY LIMITED TO WHAT IS SHOWN ON DRAWINGS. THE INTENT IS TO INDICATE THE GENERAL SCOPE OF DEMOLITION REQUIRED TO COMPLETE THE SCOPE OF WORK. IF QUESTIONS ARISE AS TO THE REMOVAL OF ANY MATERIAL IN ACCORDANCE WITH THE CONTRACT DOCUMENTS, CLARIFY THE POINT IN QUESTION WITH THE ARCHITECT BEFORE PROCEEDING.
24. STAIRWAYS AND A CLEAR PATH OF EGRESS MUST REMAIN ACCESSIBLE AT ALL TIMES DURING DEMOLITION.
25. ALL DEMOLITION DURING CONSTRUCTION SHALL FOLLOW THE 2021 INTERNATIONAL FIRE CODE CHAPTER 33: FIRE SAFETY DURING CONSTRUCTION AND DEMOLITION.

2 TM 07/29/2025

VILLAGE OF OAK PARK
CONSTRUCTION DOCUMENT(S)
REVIEWED FOR COMPLIANCE
KEEP A PRINTED APPROVED COPY OF THE PLANS ON SITE AT ALL TIMES FOR CONTRACTORS AND INSPECTORS

LICENSED ARCHITECT
THOMAS CLINTON MONTGOMERY
001.022640
STATE OF ILLINOIS

07/29/2025

ILLINOIS LICENSE NO: 001.022640
EXPIRATION: 11/30/2026

1144 Lake Street, LLC

TENANT SPACE DEMOLITION

1144 W LAKE ST
OAK PARK, IL 60301

NO.	DESCRIPTION	DATE
2	PERMIT CORRECTIONS	07/29/2025
1	ISSUED FOR PERMIT	07/16/2025

THOMAS MONTGOMERY
ARCHITECT
www.tcmontgomery.com

1701 W 19TH ST
CHICAGO IL 60608
773.999.9842

tom@tcmontgomery.com

JOB NO.: 25.068

COPYRIGHT **2025**: THOMAS MONTGOMERY ARCHITECT, EXPRESSLY RESERVES ITS COMMON LAW COPYRIGHT AND OTHER PROPERTY RIGHTS IN THESE PLANS. THESE PLANS ARE NOT TO BE REPRODUCED, CHANGED OR COPIED IN ANY FORM OR MANNER WHATSOEVER, NOR ARE THEY TO BE ASSIGNED TO ANY THIRD PARTY, WITHOUT FIRST OBTAINING THE EXPRESSED WRITTEN PERMISSION AND CONSENT OF THOMAS MONTGOMERY.

THESE DRAWINGS MAY HAVE BEEN REPRODUCED AT A SIZE DIFFERENTLY THAN ORIGINALLY DRAWN. OWNER AND ARCHITECT ASSUME NO RESPONSIBILITY FOR USE OF INCORRECT SCALE.

SCALE: 1/8" = 1'-0"

TITLE: **FIRST FLOOR DEMOLITION PLAN**

SHEET: **D-1.1**

7/31/2025 5:27:44 PM

Development Customer Services Department

COMMERCIAL / MULTI-FAMILY / MIXED-USE
Construction Site Requirements

The Village of Oak Park
123 Madison Street
Oak Park, IL. 60302-4272

Permits@Oak-Park.us

CONSTRUCTION DOCUMENTS: Shall remain on site during the entire project.

1) PERMIT / PERMISSION TO WORK placard(s) must be displayed in a conspicuous place visible form the public street.
2) CUT SHEETS aka Manufacturer Documentation is to be available to the inspector for all items installed.
3) APPROVED "JOB COPY" PLANS Readable stamped plans shall be on site until Building Final has been fully approved. Plans submitted electronically through the village portal shall be printed by the applicant (marked (Stamped)) and be retained on site for contractors and inspectors.

Failure to keep documents on site at all times may result in a failed inspection(s), a "STOP WORK" order being placed on the project, and/or citations being issued with possible fines. Having these documents on site helps all Village employees access scope of work for inspections and during emergency situations.

JOB SITE MAINTENANCE:
- Signage is required that shows the address of the project, the contractor name, and contact information.
- Before you dig call J.U.L.I.E. @ 811.
- Construction hours are 7:00am through 6:00pm (Municipal Code Article 16).
- Address numbers shall be posted in the front and in the alley of the site (if applicable).
- Trees shall be protected in the parkways.
- Do not block sidewalks or alleyways.
- Portable toilets shall be properly maintained a minimum of 10' from the lot line.
- 6' Construction fencing shall be required.
- Respect the neighboring properties; do not trespass on or damage neighboring properties.
- Keep the site clean, safe, organized, and free from debris.
- Maintain all guardrails, walkways, ladders, and stain in a safe condition.

COMPLETION & OCCUPANCY:
Once the project is completed, all projects require a final inspection. A Certificate of Occupancy is often required for new construction and newly remodeled spaces.

IN EMERGENCY CALL
Police / Fire @ 911
NICOR @ 888-642-6748
ComEd @888-344-7661
J.U.L.I.E. @ 811

ADOPTED VILLAGE OF OAK PARK CODES
In addition to the amendments posted on-line at www.oak-park.us, Oak Park has adopted the following codes:
- International Building Code - 2021 Edition
- International Energy Conservation Code - 2021 Edition
- National Electric Code - 2020 Edition
- International Mechanical Code – 2021 Edition
- International Fire Code - 2021 Edition
- International Existing Building Code – 2021 Edition
- International Fuel Gas Code – 2021 Edition
- Illinois State Plumbing Code - 2014 Addition
- Illinois Accessibility Code

Other Codes to Consider
- OSHA, FEMA, ADA, Cook County, State of Illinois, United States

Code books may be purchased by contacting the International Code Council, 800.214.4321 or www.intlcode.org
These codes are available for public free access on-line at https://codes.iccsafe.org/public/collections/I-Codes

TO SCHEDULE AN INSPECTION
CALL 708-358-5430 or www.oak-park.us
- In general, nothing should be concealed unless a passing inspection has been issued.
- Inspections must be called for a minimum of 24 business hours in advance, although it is not guaranteed that an inspection time will be available in 24 hours.
- For increased likelihood in getting an inspection on the day and time you want, call 3 business days before you want the inspection.
- Please have your permit number(s) when phoning in for an inspection.

REQUIRED INSPECTION CHECKLIST
The Village of Oak Park requires the following inspections to pass prior to construction continuance.

	Pre-Demolition	A pre-demolition inspection of the primary structure after all required fencing, barricades, etc. are installed.
	Footing (Pre-pour)	Inspected after a footing is formed out, including all steel bars, before concrete is placed.
	Foundation (Pre-pour)	Inspected after a foundation is formed out, including all reinforcing steel bars, before concrete is placed.
	Foundation (Backfill)	Inspected after foundation waterproofing, exterior drain tile, exterior insulation, and anchoring or bracing have been installed before it is covered.
	Plumbing (Underground) (Storm, Sanitary Sewer and/or Water)	PRIVATE PROPERTY: inspect plumbing / sewer pipes before it is covered. Call D.S.C Right-of-way: Inspect plumbing / sewer pipes before it is covered. Call Public Works.
	Electric (Underground)	Inspected after electrical work below grade is complete before it is covered.
	HVAC (Underground)	Inspected after gas lines or ducts are installed below grade before it is covered.
	Slab (Pre-pour)	Inspected after forms, sub-grade, reinforcement, interior drain tile, vapor barrier are installed, and other required below grade inspections have passed, before concrete is placed or pavers are installed.
	Plumbing (Rough)	Inspected after plumbing work in concealed spaces is completed, before being covered.
	Electric (Rough)	Inspected after electric work in concealed spaces including wire pull is completed, before being covered. Splices may be done but is not required. LV and communication cables must also be installed and inspected.
	HVAC (Rough)	Inspected after ducts, vents, and/or gas lines are installed in concealed spaces, before being covered.
	Framing (Structure)	Inspected after other required rough inspections have passed, after all framing is completed, before walls and ceilings are insulated. NOTE: Fire-stopping and fire blocking shall be installed.
	Insulation	Inspected after the framing inspection has passed, after insulation is installed, before being covered.
	Drywall	**Required ONLY for fire rated construction.** Inspected after each layer of drywall is installed, before taping or installing additional layers of drywall, wallpaper, ceiling tiles, paint, or similar is installed.
	Electric (Service)	Inspected after the electric service is installed. *The electrical inspector notifies ComEd after a service is passed.*
	Plumbing (Service)	Inspected after the plumbing service is installed before being covered. (IDPH)
	Plumbing (Final)	Inspected after all plumbing work is complete. (Any service work will be listed as a service inspection).
	Electric (Final)	Inspected after all electric work is complete. (Any service work will be listed as a service inspection).
	HVAC (Final)	Inspected after all HVAC equipment is installed and operating.
	Energy (Final)	Inspects insulation certificates and a blower door test, etc.
	Building (Final) **REQUIRED**	Inspected after all other phases of work, including any other Village Department final inspections are approved, after all work is complete.
Other Inspections (If Applicable)		
	Elevator (Final)	Inspected after all equipment regulated by the Elevator Safety & Regulation Act is installed and operating.
	Fire (Rough & Final)	Inspects sprinkler systems and other associated fire control devices, KNOX box locations.
	Health (Rough & Final)	All food, daycares, and body art establishments.
	PW – Forestry	Tree oversight.
	PW – Engineering (Rough & Final)	Inspects all drainage systems and major water systems, along with MWRD.

NOTE: Additional inspections required by other village departments, such as Fire (708-358-5609), Health (708-358-5489), Engineering (708-358-5722) or MWRD (708-588-4055) are not included in this list. It is the contractor's and/or owner's responsibility to assure they have obtained all the necessary inspections required by each department in proper sequence as related to the inspections listed below.

Special inspections or other third party testing is required to be hired by and paid for by the contractor / owner of record. All testing results whether required by code or done for other reasons are to be uploaded to the Village Portal and available on site for inspections. Some examples would be: soil or concrete testing, welding, spray-applied fire-resistant materials, HVAC pressure balance and testing, and infiltration blower door testing.

ELECTRICAL: GENERAL
- ALL ELECTRICAL ITEMS TO BE U.L. LISTED AND LABELED - cut sheets to be available at inspection.
- All receptacles located in Kitchen (including prep areas) and Bathroom areas are to be GFCI protected.
- Showroom outlets are required above every 12' of store front windows
- A GFCI outlet is required within 25' of all mechanical equipment.
- Outdoor outlets are required to be listed WR (Weather Resistant) and have an in-use cover.
- The branch circuit feeding the emergency lights shall be the same branch circuit as that feeding the normal lighting fixtures in the area.
- All Telecom and fire alarm cables must have their own raceway which is secured to the structure.
- Please note that all low voltage cabling shall be secured within a cable tray.
- Provide a minimum of 1 foot-candle of emergency lighting along all areas of the egress corridors.
- An approved exit sign shall mark all exit doors and paths & be readily visible from any direction of egress travel.

ELECTRICAL: SERVICE
- All work to be done per ComEd "Red Book"
- The service panel, exterior electrical meter, disconnects shall have a 30"x3' working clearance.
- Overhead wires and service drop must be a minimum of 5 feet away from operable windows.
- Overhead service drop clearances:

1. At the service entrance: 10 feet above the ground
2. Above roofs with a slope of less than 4 in 12: 8 feet
3. Above roofs with a slope of 4 in 12 or greater: 3 feet
4. Over public streets, alleys, roads, and parking areas subject to truck traffic: 18 feet
5. Service conductor clearance from doors, porches, balconies, ladders, stairs, etc.: 3 feet

MANUFACTURED ITEMS
- Any and all manufactured items must be rated for the use and installed per manufacturer's installation instructions.
- Provide a copy of the manufacturer's installation instructions for the permit file and site inspection.

EGRESS
- All routes / hallways shall be a minimum of 36" with occupancy of 50 or less. Greater than 50 refer to the IBC.
- All Bedrooms, Basements, Basement Living Spaces, and Basement Bedrooms shall have egress directly to the exterior grade by a door or egress window.

ENERGY
- Refer to the certificate from the design professional or follow the prescribed ratings on the following charts:

Climate Zone 5	OTHER	Group R
Roof-Insulation entirely above the roof deck-	R30ci	**SAME**
Roof-Metal Buildings	R19+R11 LS	**SAME**
Roof-Attic & Other	R49	**SAME**
Walls-Above Grade-Mass	R11.4ci	R13.3ci
Walls- Above Grade-Metal Buildings	R13+R 14ci	**SAME**
Walls- Above Grade-Metal Frame	R13+R10ci	**SAME**
Walls-Wood Frame and Other	R13+7.5ci or R20+3.8ci	**SAME**
Walls-Below Grade	R7.5ci	R10ci
Floors-Mass below grade	**R14.6 ci**	**R16.7ci**
Floors-Joist/framing	R30	R30
Unheated Slabs	R15 for 24" below	R20 for 24" below
Heated Slabs	R15 for 36" below +R5 full slab	**SAME**

- U-factor for new windows shall be 0.36 or less for a fixed unit.
- U-factor for new windows shall be 0.45 or less for an operable unit.
- All HVAC ductwork shall be sealed.
- Building entrances which serve the public and open into spaces with an area of 3000 sf or more shall be protected with an enclosed vestibule, with all doors opening into and out of the vestibule equipped with self-closing devices. Vestibules shall be designed so that in passing through the vestibule it is not necessary for the interior and exterior doors to open at the same time.
- Ductwork shall be insulated in unconditioned spaces.
- Heating water pipes or hot water pipes shall be wrapped.
- Heated exteriors shall be radiant heat.
- Wood-burning fireplaces shall have tight fitting air dampers.
- Provide the proposed detail of the lighting controls.
- Provide occupancy sensors in spaces less than 300sf, where lights shall shut off within 30 minutes after occupants leave the space.
- A MINIMUM of 100% of all lamps in permanently installed light fixtures shall be high efficiency lamps.
- Provide an electric detail pertaining to the required tandem wiring if fluorescent lighting.
- Provide occupant sensor controls with manual override or time switch controls for lighting in classrooms/lecture/training rooms, conference/meeting/multi-purpose rooms, copy/print rooms, lounges, employee lunch and break rooms, private offices, restrooms, storage rooms, janitorial closets, locker rooms, other spaces 300 sf or less that are enclosed by floor-to-ceiling height partitions, and warehouses. Where spaces are provided with time clock controls for lighting, they shall also be provided with light reduction controls that allows the occupant to reduce the connected lighting load in a reasonably uniform illumination pattern by at least 50 percent.

GAS PIPING
- The gas meter shall be accessible.
- All devices shall have accessible shut offs.
- Provide a copy of the manufacturer's installation instructions for the permit file and site inspection.
- Inspection required.
- In multiple tenant and multiple family buildings shutoff valves shall be provided for each tenant. Each tenant shall have access to the shutoff valve serving that tenant's space.

GLAZING
- Bathtub glazing shall be safety glazed / tempered glass.
- Glazing at the staircase will be safety glazed.
- Glazing at the door swing will be safety glazed.
- Skylights shall be safety glazed.
- See other requirements in the IBC.

STAIR REQUIREMENTS FOR COMMERCIAL AND MULTI-FAMILY BUILDINGS
- Minimum stair width: 44" – if occupancy is less than 50 people, minimum width = 36"
- Minimum tread width: 11"
- Maximum riser height: 7"
- Minimum riser height: 4"
- Minimum landing width: same as stair width.
- Maximum height of a flight of stairs between a floor or landing: 12 feet
- Minimum clear headroom above nosing: 6' 8"
- Nosing's are required at each tread.
- Nosing projection from riser if nosing's are provided: ②" to 1 ¼"
- Handrails required on both sides of the stairs.
- Intermediate handrails are required so that all portions of the stair are within 30" from a handrail.
- Spacing of handrail from the wall: 1 ½" (Maximum and Minimum)
- Handrail brackets shall be attached to the bottom of the handrail and shall attach to the wall 1 ½" below the bottom of the handrail.
- Handrails shall return to the wall.
- Height of handrails: 34" to 38" above nosing
- Handrails extension at bottom floor, top floor or landing: 12"
- Size of handrails

• Circular cross section: 1 ¼" diameter to 2" diameter
•Rectangular cross section: Perimeter of 4" to 6 ¼" with maximum dimension of 2 ¼"

- Guards: required at stairs, ramps, landings and floor openings which are more than 30" higher than surface below.
- Height of guards above stair nosing, floor or landing: 42" minimum
- Spacing of balusters in handrails and guards: sized as to not to allow passage of a 4" sphere between balusters and 6" sphere at the triangular opening formed by the tread, riser and bottom rail of a guard or handrail.

HVAC
- Heating system: Provide equipment and distribution system capable of maintaining indoor temperature at 68 degrees F at -10 degrees F exterior.
- Provide a mechanical ventilation schedule verifying the area of each room or space, the mechanical code occupant load and the outside air required for each room or space as required by the IMC Table 403.3.
- Provide ACCA Manuals S and J results to determine heating and cooling sizing.
- Per VOP Guidelines, HVAC, A/C & Exhaust shall not cause nuisances and shall be located:
- Minimum of TEN (10') FEET from lot lines and openable windows.
- Minimum of THREE (3') FEET from exterior walls and roofs.
- Per VOP Guidelines, Kitchen & Bath exhaust shall not cause nuisances and shall be located:
- Minimum of THREE (3') FEET from lot lines and openable windows.
- Minimum of TEN (10') FEET from mechanical intakes.
- For commercial, multi-family and mixed-use buildings, provide a HVAC test and balance report for village approval prior to obtaining a certificate of occupancy.
- Ducts shall be supported with approved hangers at intervals not exceeding 10 feet or by other approved duct support systems designed in accordance with the International Building Code- flexible and other factory-made ducts shall be supported in accordance with the manufacturer's installation instructions.

PLUMBING
- A Metropolitan Water Reclamation District Permit may be required, refer to the City Engineer.
- WATER SERVICE BACKFLOW PREVENTION:

The following buildings will need to install an RPZ (Reduced Pressure Zone backflow preventer) device on the potable water supply:
- New commercial, or mixed-use commercial and residential buildings.
- Additions to existing commercial or mixed-use commercial and residential buildings.
- Existing commercial or mixed-use commercial and residential buildings which undergo Alterations Level 2 or Level 3 in accordance with the International Existing Building Code, where a minimum of 25% of existing plumbing work is to alter.
- EXCEPTION: If there is no existing floor drain within ten feet from the water meter, a testable double check valve is required in lieu of an RPZ.
- Backflow prevention devices will require certification by a certified backflow inspector at the time of installation and annually thereafter.
- An RPZ is required on all equipment directly connected to the water supply.
- The water meter shall be accessible and serviceable.
- All devices shall have accessibility shut offs.
- Provide a copy of the manufacturer's installation instructions for the permit file and site inspection.
- Any project proposing a new plumbing fixture (one or more) shall complete a Village of Oak Park "Water Service Fixture Unit Calculation Worksheet" to assess the need to upgrade the water system. The required form is available on the Village's website and shall be submitted with all required documents.

FIRE BLOCKING / DRAFT STOPPING
- Fire blocking / Draft stopping shall be installed and be a maximum ten feet on center, horizontal and vertical.

PUBLIC Right-of-Ways
- TREES (Parkway): Shall be protected by a fence a minimum of 10' away from any tree.
- RESTORATION: Public sidewalks shall be restored within 3-7 days (weather permitting) from removal or temporarily backfilled with compacted limestone screenings.

EXTERIOR SITE GRADING
- New principal commercial buildings require detailed engineering drawings for storm water drainage.
- Wood framed structures shall have a minimum of 6" of exposed concrete / masonry 4".
- Grades shall conform to the natural slope of the neighborhood.
- Grades shall not cause a nuisance.
- Grades shall not cause ponding.
- Grades shall not create icing or alga on Village property.
- All sumps or Hub drains for receiving clear water waste shall extend two inches above the floor. All indirect clear water waste lines shall be above the floor level. Any floor drain which is level which is level with the floor shall discharge to a sanitary waste drain.

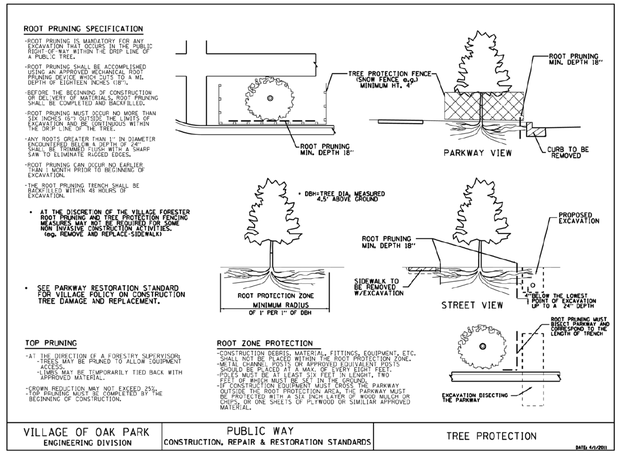

Disclaimer: **This guideline is not all inclusive of the related codes and laws that pertain to this project. Please refer to the actual code book for details. The permit process is a check and balance system that normally involves a designer, plans examiner, contractor, and inspector to ensure the best quality and safest construction possible. As much as the mentioned professionals attempt to achieve full code compliance every effort has been made to identify all code deficiencies, however, failure to identify a code deficiency during plan review and inspection does not alleviate any obligation to comply with all applicable code provisions.**

LANDLORD TENANT SPACE RENOVATIONS

1144 W LAKE ST
OAK PARK, IL 60301

ALTERATIONS TO EXISTING GROUND FLOOR & BASEMENT TENANT SPACE
WITHIN AN EXISTING MIXED-USE FIVE-STORY BUILDING
TYPE I-B CONSTRUCTION - FULLY SPRINKLERED
GROUP M/A-2/B OCCUPANCY

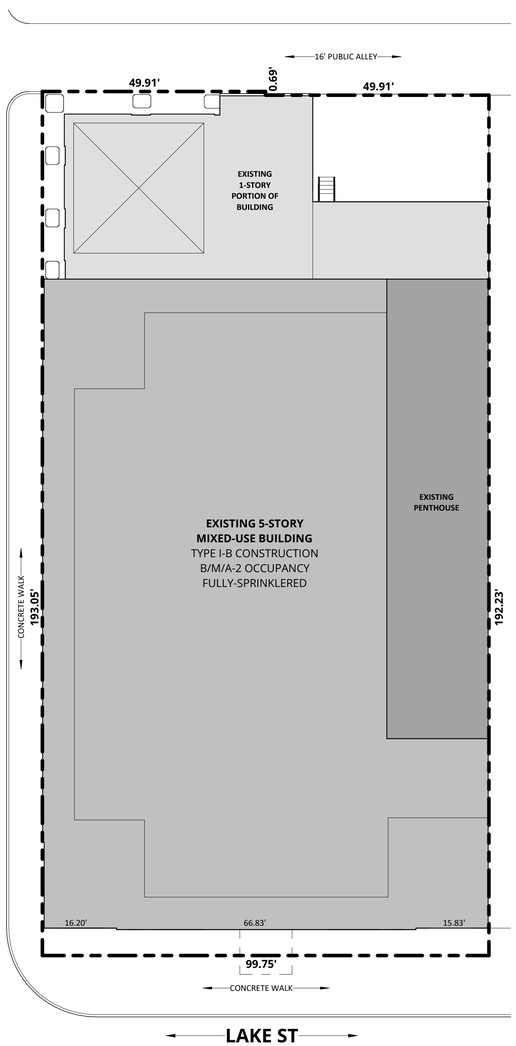

1 **SITE PLAN-FOR REFERENCE**
1/16" = 1'-0"

0' 8' 16' 32'

3 TM 08/19/2025

FIRE ALARM NOTES

1. CONTRACTOR SHALL DESIGN AND BUILD ALTERATIONS FOR A COMPLETE, OPERATING MANUAL AND AUTOMATIC FIRE ALARM SYSTEM FOR THE AREA OF WORK AS REQUIRED. FIRE ALARM SHALL BE INSTALLED IN ACCORDANCE WITH NFPA 72 AND LOCAL ORDINANCES.
2. WORK SHALL BE PERFORMED IN A NEAT WORKMANLIKE MANNER.
3. PROCURE ALL REQUIRED PERMITS AND INSPECTIONS. SUBMIT INSTALLATION DRAWINGS FOR VILLAGE AND FIRE DEPARTMENT APPROVAL. DRAWINGS SHALL BEAR THE SIGNATURE AND SEAL OF AN ILLINOIS REGISTERED PROFESSIONAL ENGINEER.
4. CONFER WITH THE OTHER TRADES IN THE COORDINATION OF THIS WORK FOR CLEARANCES, CHASES, RECESSES AND OPENINGS REQUIRED.
5. GUARANTEE THE WORK TO BE FREE FROM DEFECTIVE WORKMANSHIP AND MATERIALS FOR A PERIOD OF ONE YEAR FROM DATE OF FINAL CERTIFICATE. ANY REPAIRS OR REPLACEMENT DURING THIS PERIOD SHALL BE MADE WITHOUT COST TO THE OWNER.
6. FIRE PROTECTION CONTRACTOR TO PROVIDE 1/4"=1'-0" SCALE AS-BUILT DRAWINGS TO OWNER.
7. THE PRIMARY AND SECONDARY POWER SUPPLY FOR THE FIRE ALARM SHALL BE PROVIDED IN ACCORDANCE WITH NFPA 72.

SPRINKLER NOTES

1. CONTRACTOR SHALL DESIGN AND BUILD ALTERATIONS FOR A COMPLETE, OPERATING AUTOMATIC WET SPRINKLER SYSTEM FOR THE AREA OF WORK AS REQUIRED TO THE STANDARD OF NFPA 13. PROVIDE NEW MAIN (WHERE REQUIRED), BRANCHES AND SPRINKLER HEADS FOR RENOVATED AREA AND POSITION NEW SPRINKLER HEADS AND SYSTEM COMPONENTS AS REQUIRED BY NFPA, FIRE MARSHAL, AND VILLAGE REQUIREMENTS. REMOVE EXISTING PIPING AND HEADS WHERE NOT USED AND CAP PIPING. EXISTING SPRINKLERS SHALL BE REUSED WHEREVER POSSIBLE.
2. WORK SHALL BE PERFORMED IN A NEAT WORKMANLIKE MANNER.
3. PROCURE ALL REQUIRED PERMITS AND INSPECTIONS. SUBMIT INSTALLATION DRAWINGS FOR VILLAGE AND FIRE DEPARTMENT APPROVAL. DRAWINGS SHALL BEAR THE SIGNATURE AND SEAL OF AN ILLINOIS REGISTERED PROFESSIONAL ENGINEER.
4. THIS TRADE SHALL DO ITS OWN CUTTING AND PATCHING.
5. CONFER WITH THE OTHER TRADES IN THE COORDINATION OF THIS WORK FOR CLEARANCES, CHASES, RECESSES AND OPENINGS REQUIRED.
6. GUARANTEE THE WORK TO BE FREE FROM DEFECTIVE WORKMANSHIP AND MATERIALS FOR A PERIOD OF ONE YEAR FROM DATE OF FINAL CERTIFICATE. ANY REPAIRS OR REPLACEMENT DURING THIS PERIOD SHALL BE MADE WITHOUT COST TO THE OWNER.
7. ENTIRE INSTALLATION SHALL BE MADE IN ACCORD WITH REQUIREMENTS OF APPLICABLE NFPA STANDARDS AND THE LOCAL FIRE PREVENTION DEPARTMENT.
8. FIRE SPRINKLER PIPING SHALL BE SCHEDULE 40 BLACK STEEL PIPE, GROOVED OR WELDED.
9. ALL PIPING SHALL BE SUPPORTED AND BRACED IN ACCORDANCE WITH NFPA-13.
10. INSTALL PIPING & EQUIPMENT AS REQUIRED BY NFPA-13.
11. PRESSURE TEST & FLUSH PIPING ACCORDING TO PROCEDURES SET FORTH NFPA. REPAIR ANY DAMAGE TO ANY OTHER WORK CAUSED BY INSTALLATION OR BY LEAKS IN THE FIRE PROTECTION.
12. THE ENTIRE PROJECT AREA SHALL BE PROTECTED WITH AN APPROVED, WET HYDRAULIC CALCULATED AUTOMATIC SPRINKLER SYSTEM. COORDINATE WITH FLOOR CEILING CONSTRUCTION TRADES TO PROVIDE ACCESS TO ALL VALVES AND OTHER EQUIPMENT.
13. PIPE AND FITTINGS SHALL BE IN ACCORDANCE WITH NFPA #13. THE CORROSION RESISTANCE RATION (CRR) OF PIPING SHALL NOT BE LESS THAN 1.0.
14. FINAL SPRINKLER SYSTEM TEST SHALL BE MADE IN ACCORDANCE WITH NFPA #13.
15. FIRE PROTECTION CONTRACTOR TO PROVIDE 1/4"=1'-0" SCALE AS-BUILT DRAWINGS TO OWNER.
16. WORK ON THE FIRE SPRINKLER SYSTEM REQUIRES A SEPARATE PERMIT APPLICATION AND SHOP DRAWINGS SHALL BE SUBMITTED FOR REVIEW AND APPROVAL PRIOR TO ANY INSTALLATION.

ABBREVIATIONS

A/C	AIR CONDITIONING
AFF	ABOVE FINISHED FLOOR
BD	BOARD
BLD	BUILDING
CPT	CARPET
CLG	CEILING
CJ	CONTROL JOINT
CMU	CONCRETE MASONRY UNIT
CONC	CONCRETE
CONT	CONTINUOUS
CO	CLEAN OUT
CW	COLD WATER
CT	CERAMIC TILE
DF	DRINKING FOUNTAIN
DIA	DIAMETER
DIM	DIMENSION
DN	DOWN
DS	DOWNSPOUT
DET	DETAIL
DWG	DRAWING
EA	EACH
EQ	EQUAL
EX OR EXIST	EXISTING
EXT	EXTERIOR
FEC	FIRE EXTINGUISHER CABINET
FHC	FIRE HOSE CABINET
FLR	FLOOR
FD	FLOOR DRAIN
GALV	GALVANIZED
GA	GAUGE
GB	GYPSUM BOARD
HDWR	HARDWARE
H OR HT	HEIGHT
HM	HOLLOW METAL
HW	HOT WATER
MFR	MANUFACTURER
MO	MASONRY OPENING
MTL	METAL
NIC	NOT IN CONTRACT
NTS	NOT TO SCALE
OC	ON CENTER
PT	PAINT
PLAM	PLASTIC LAMINATE
PL	PLATE
R OR RAD	RADIUS
RO	ROUGH OPENING
SHT	SHEET
SIM	SIMILAR
STD	STANDARD
T & G	TONGUE AND GROOVE
T/	TOP
TRANS	TRANSPARENT
TYP	TYPICAL
UNO OR UON	UNLESS NOTED OTHERWISE
VIF	VERIFY IN FIELD
W	WIDTH
WWF	WELDED WIRE FABRIC

PROJECT DIRECTORY

OWNER

1144 LAKE STREET, LLC
415 N LASALLE ST
CHICAGO, IL 60654

ARCHITECT

THOMAS MONTGOMERY ARCHITECT
1701 W 19TH ST
CHICAGO, IL 60608

CONTACT: THOMAS MONTGOMERY
(773) 999-9842
tom@tcmontgomery.com

AREA OF WORK

BASEMENT:	20,110 SF	EXISTING
	230 SF	RENOVATED
FIRST FLOOR:	17,050 SF	EXISTING
	4,500 SF	RENOVATED
SECOND FLOOR	14,430 SF	EXISTING
THIRD FLOOR	14,430 SF	EXISTING
FOURTH FLOOR	14,430 SF	EXISTING
FIFTH FLOOR	12,930 SF	EXISTING
PENTHOUSE	2,327 SF	EXISTING
UPPER PENTHOUSE	2,327 SF	EXISTING
TOTAL:	**98,034 SF**	**EXISTING**
	4,730 SF	**RENOVATED**
	LEVEL 2 ALTERATIONS	

SYMBOLS

ROOM NAME 101	ROOM REFERENCE
SIM 1 A8.6	SECTION REFERENCE
SIM 1 A8.6	EXTERIOR ELEVATION
1 4 A-7.1 2 3	INTERIOR ELEVATION
1 A-0	DETAIL / ENLARGED PLAN
Name Elevation	ELEVATION MARK
1 View Name 1/8" = 1'-0"	VIEW TITLE AND NUMBER
1	REVISION CLOUD
X'-X"	DIMENSION
℄	CENTERLINE
#.# #.#	COLUMN GRID LINE

PROJECT SCOPE

THE SCOPE FOR THIS PROJECT INCLUDES LANDLORD WORK THAT INVOLVES RENOVATIONS TO AN EXISTING BASEMENT AND FIRST FLOOR TENANT SPACE TO PREP THE SPACE FOR A TENANT RENOVATION. THE PROPOSED SCOPE OF WORK INCLUDES REPAIR OF DRYWALL PARTITIONS AND DECORATIVE PLASTER ELEMENTS AND ALTERED/NEW STOREFRONT DOORS IN THE BUILDING ENTRY AND TO ACCESS THE TENANT SPACE.

ALL OF THE WORK INCLUDED IN THIS SCOPE WILL BE CONDUCTED IN A SINGLE PHASE, HOWEVER THE TENANT BUILD-OUT OF THE SPACE WILL BE PERMITTED SEPARATELY BY OTHERS.

NOTE: NO NEW PLUMBING, FUEL GAS, ENERGY CONSERVATION OR MECHANICAL WORK IS PROPOSED IN THIS SCOPE OF WORK.

LOCATION MAP

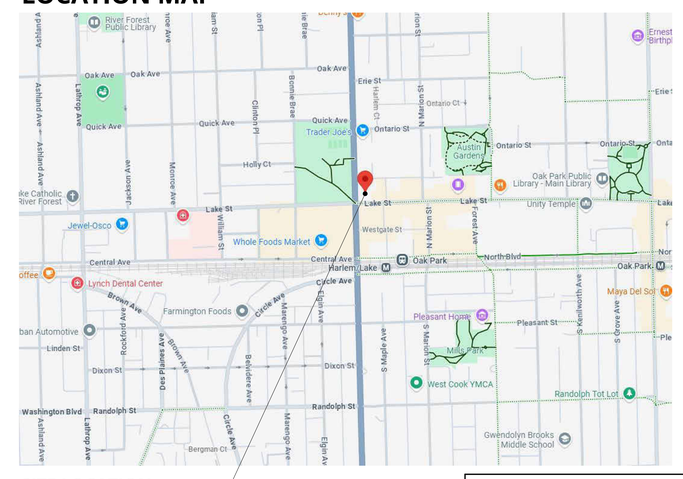

SITE LOCATION

DRAWING INDEX

SHEET NO.	SHEET TITLE	ISSUED FOR PERMIT	PERMIT CORRECTIONS			
G-000	COVER SHEET	•				
G-100	EGRESS PLANS & CODE MATRIX	•	•			
G-200	ACCESSIBILITY DIAGRAMS					
A-100	BASEMENT PLAN	•				
A-101	FIRST FLOOR PLAN	•				

LICENSED ARCHITECT OF RECORD STATEMENT

I HEREBY CERTIFY THAT THESE PLANS HAVE BEEN PREPARED UNDER MY DIRECTION, AND TO THE BEST OF MY KNOWLEDGE AND BELIEFS CONFORM TO THE VILLAGE OF OAK PARK BUILDING CODES AND ORDINANCES.

SIGNED:

ILLINOIS LICENSE NUMBER: 001.022640

DATE: 08/19/2025

LICENSED ARCHITECT
THOMAS CLINTON MONTGOMERY
001.022640
STATE OF ILLINOIS

AFFIX PROFESSIONAL SEAL HERE

THE DRAWINGS COMPLY WITH THE FOLLOWING CODES:

- **OAK PARK ZONING ORDINANCE**
- **2021 INTERNATIONAL BUILDING CODE W/AMENDMENTS**
- **2021 INTERNATIONAL EXISTING BUILDING CODE (IEBC**
- **2020 NATIONAL ELECTRICAL CODE (NEC) W/AMENDMENTS**
- **2021 INTERNATIONAL FIRE CODE (IFC) W/AMENDMENTS**
- **2021 ILLINOIS ENERGY CONSERVATION CODE (IECC)**
- **2021 INTERNATIONAL MECHANICAL CODE (IMC) W/ AMENDMENTS**
- **2021 INTERNATIONAL FUEL GAS CODE (IFGC)**
- **2018 ILLINOIS ACCESSIBILITY CODE (IAC)**
- **2017 ICC A117.1**
- **2014 ILLINOIS PLUMBING CODE (IPC)**

VILLAGE OF OAK PARK
CONSTRUCTION DOCUMENT(S)
REVIEWED FOR COMPLIANCE
KEEP A PRINTED APPROVED COPY OF THE PLANS ON SITE AT ALL TIMES FOR CONTRACTORS AND INSPECTORS

LICENSED ARCHITECT
THOMAS CLINTON MONTGOMERY
001.022640
STATE OF ILLINOIS

08/19/2025

ILLINOIS LICENSE NO: 001.022640
EXPIRATION: 11/30/2026

1144 Lake Street, LLC

LANDLORD TENANT SPACE RENOVATIONS

1144 W LAKE ST
OAK PARK, IL 60301

NO.	DESCRIPTION	DATE
3	PERMIT CORRECTIONS	08/19/2025
1	ISSUED FOR PERMIT	07/16/2025

THOMAS MONTGOMERY
ARCHITECT
www.tcmontgomery.com

1701 W 19TH ST
CHICAGO IL 60608
773.999.9842

tom@tcmontgomery.com

JOB NO.: 25.068

COPYRIGHT **2025**: THOMAS MONTGOMERY ARCHITECT, EXPRESSLY RESERVES ITS COMMON LAW COPYRIGHT AND OTHER PROPERTY RIGHTS IN THESE PLANS. THESE PLANS ARE NOT TO BE REPRODUCED, CHANGED OR COPIED IN ANY FORM OR MANNER WHATSOEVER, NOR ARE THEY TO BE ASSIGNED TO ANY THIRD PARTY, WITHOUT FIRST OBTAINING THE EXPRESSED WRITTEN PERMISSION AND CONSENT OF THOMAS MONTGOMERY.

THESE DRAWINGS MAY HAVE BEEN REPRODUCED AT A SIZE DIFFERENTLY THAN ORIGINALLY DRAWN. OWNER AND ARCHITECT ASSUME NO RESPONSIBILITY FOR USE OF INCORRECT SCALE.

SCALE: As indicated

TITLE: **COVER SHEET**

SHEET: **G-000**

8/19/2025 11:43:06 AM

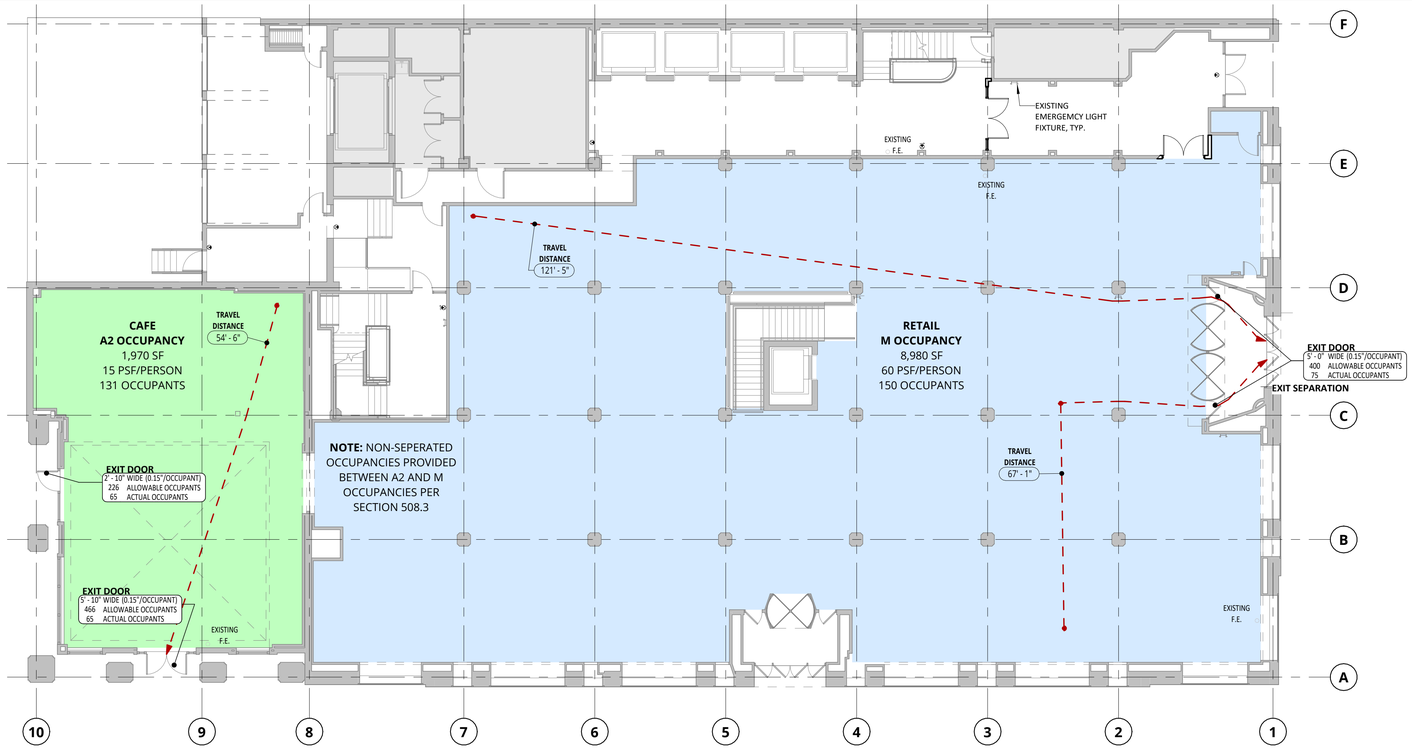

2 **FIRST FLOOR EGRESS**
3/32" = 1'-0"

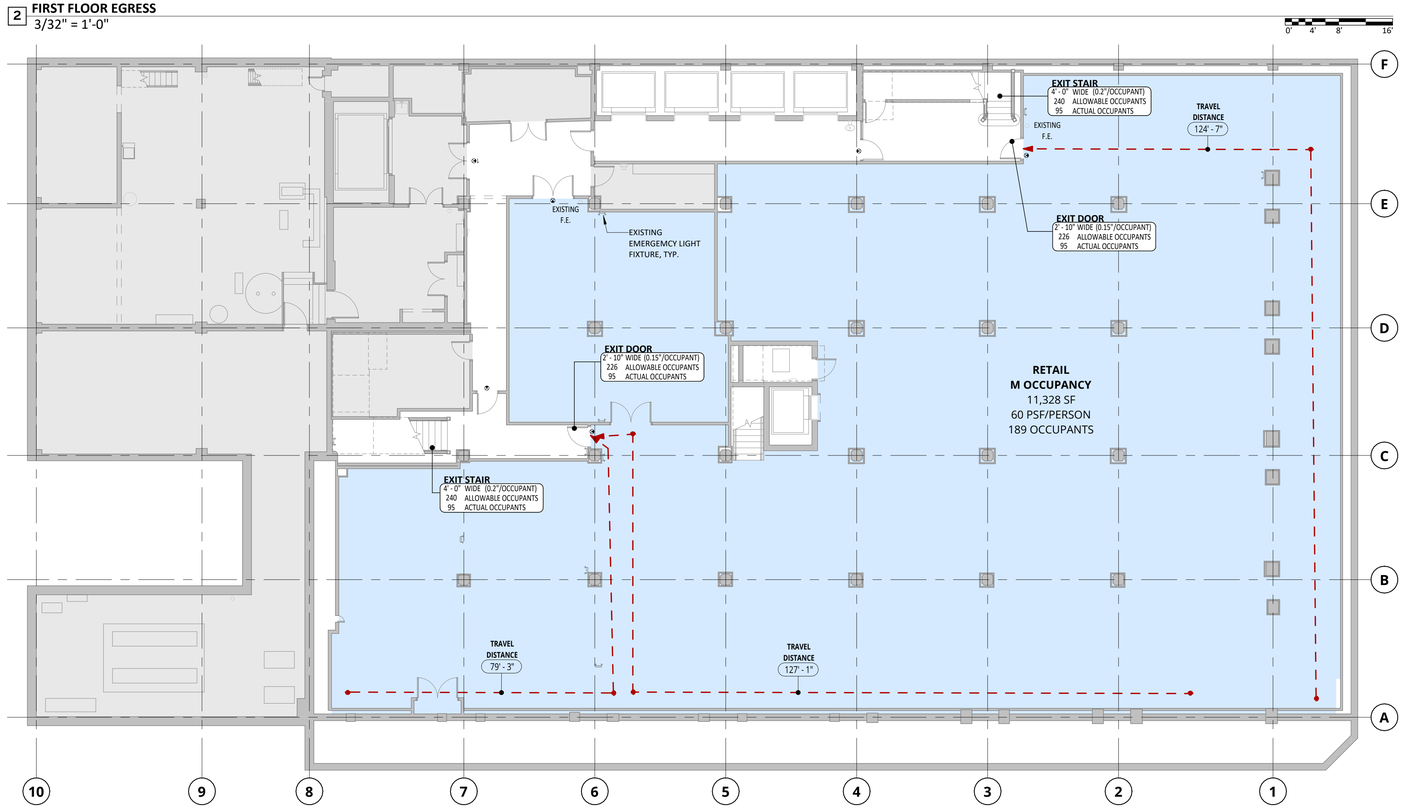

1 **BASEMENT EGRESS**
3/32" = 1'-0"

8/19/2025 11:45:10 AM

EXITING AND FIRE SEPARATION LEGEND

AREA N.I.C.

NEW CONSTRUCTION

EXISTING CONSTRUCTION

1-HR FIRE-RATED

2-HR FIRE-RATED

3-HR FIRE-RATED

EXIT TRAVEL DISTANCE

EXIT
3' - 0" WIDE (0.15"/OCCUPANT)
240 ALLOWABLE OCCUPANTS
0 ACTUAL OCCUPANTS

EXIT COMPONENT TAG

SHEET NOTES

1. ALL DOORS REQUIRED AS EXITS SHALL SWING IN THE DIRECTION OF TRAVEL, U.N.O.
2. DOORS IN ANY POSITION SHALL NOT REDUCE THE WIDTH OF MEANS OF EGRESS BY MORE THAN 25% OF THE REQUIRED WIDTH.
3. ALL DOORS SHALL BE READILY OPERABLE WITHOUT THE USE OF A KEY FROM THE SIDE FROM WHICH EGRESS IS MADE.
4. THE MEANS OF EGRESS HAVE A CEILING HEIGHT OF NOT LESS THAN 7'-6".

2021 INTERNATIONAL BUILDING CODE - CODE MATRIX

ITEM	CHAPTER / ARTICLE	ISSUE	BUILDING CODE REQUIREMENT	ACTUAL PROVIDED	REMARKS
2.1 - OCCUPANCY CLASSIFICATIONS					
BUILDING OCCUPANCY CLASSIFICATIONS	302.1	OCCUPANCY GROUPS	M MERCANTILE A-2 ASSEMBLY	M MERCANTILE A-2 ASSEMBLY	
ACESSORY OCCUPANCIES	508.2	ACCESSORY OCCUPANCIES SHALL NOT OCCUPY MORE THAN 25% OF THE FLOOR AREA OR 5% OF THE TOTAL AREA	ACCESSORY OCCUPANCIES NOT REQUIRED TO BE SEPERATED	N/A	
NON-SEPARATED OCCUPANCIES	508.3	THE MOST RESTRICTIVE PROVISIONS OF EACH CLASSIFICATION SHALL APPLY	NON-SEPARATED OCCUPANCIES NOT REQUIRED TO BE SEPARATED	PROVIDED, MOST RESTRICTIVE OCCUPANCY GOVERNS	
SEPERATED OCCUPANCIES	508.4	FIRE SEPARATION REQUIREMENTS FOR MIXED OCCUPANCY SEPARATIONS	M MERCANTILE & A-2 ASSEMBLY: 1	N/A	
2.2 - ALLOWABLE BUILDING HEIGHTS & AREAS					
ALLOWABLE HEIGHT	504	HEIGHT AND STORY LIMITATIONS BASED ON CONSTRUCTION TYPE: I-B	M MERCANTILE: 12 STORIES - 180 FT A-2 ASSEMBLY: 12 STORIES - 180 FT	S-STORIES - 90'-0"	
ALLOWABLE AREA	506	AREA LIMITATIONS BASED ON CONSTRUCTION TYPE: I-B	M MERCANTILE: NO LIMIT A-2 ASSEMBLY: NO LIMIT	MAX. PROVIDED FLOOR AREA: 17050 SF, TOTAL BUILDING AREA: 73270 SF	
FRONTAGE INCREASE	506.3	AREA CAN BE INCREASED IF PERIMETER FRONTING A YARD OR PUBLIC WAY IS GREATER THAN 20 FT WIDE AND IS GREATER THAN 25% OF THE BUILDING PERIMETER	N/A	N/A	
2.3 - BUILDING CONSTRUCTION TYPE					
TYPE OF CONSTRUCTION	601	BUILDING CONSTRUCTION TYPE	TYPE I-B	TYPE I-B	
REQUIRED FIRE-RESISTANCE RATINGS FOR BUILDING ELEMENTS	TABLE 601	PRIMARY STRUCTURAL FRAME	2-HR	2-HR	NOT LESS THAN FIRE RATINGS NASED ON FIRE SEPERATION DISTANCE
		EXTERIOR BEARING WALLS	2-HR	2-HR	
		INTERIOR BEARING WALLS	2-HR	2-HR	
		EXTERIOR NON-BEARING WALLS	PER TABLE 602		
		INTERIOR NON-BEARING WALLS	0-HR	0-HR	
		FLOOR CONSTRUCTION	2-HR	2-HR	
		ROOF CONSTRUCTION	1-HR	1-HR	
FIRE-RESISTANCE RATING REQUIREMENTS FOR EXTERIOR WALLS BASED ON FIRE SEPARATION DISTANCE	TABLE 705.5	NORTH WALL	1'6 FT - 1-HR	2-HR	THE REQUIRED RATING FOR ANY EXTERIOR WALL WITH A SEPARATION DISTANCE OF 10 FT OR GREATER SHALL ONLY BE REQUIRED TO BE RATED ON THE INSIDE OF WALL. ANY EXTERIOR WALL WITH A FIRE SEPARATION DISTANCE OF LESS THAN 3 FT SHALL BE 2-HR RATED AND CONSTRUCTED OF NON-COMBUSTIBLE MATERIALS.
		SOUTH WALL	30 FT - 0-HR	2-HR	
		WEST WALL	30 FT - 0-HR	2-HR	
		EAST WALL	0 FT - 2-HR	2-HR	
COMBUSTIBLE MATERIALS	603	ALL MATERIALS IN CONSTRUCTION TYPES I & II AND EXTERIOR WALLS IN CONSTRUCTION TYPE III SHALL BE CONSTRUCTED OF NON-COMBUSTIBLE MATERIALS	REQUIRED	PROVIDED	
2.4 - FIRE AND SMOKE PROTECTION FEATURES					
MAXIMUM AREA OF WALL OPENINGS	TABLE 705.8	NORTH WALL	75%	EXISTING PROVIDED	BUILDINGS WHOSE EXTERIOR BEARING WALLS, EXTERIOR NON-BEARING WALLS, AND EXTERIOR PRIMARY STRUCTURAL FRAME ARE NOT REQUIRED TO BE FIRE-RESISTANCE RATED SHALL BE PERMITTED TO HAVE UNLIMITED OPENINGS.
		SOUTH WALL	NO LIMIT	EXISTING PROVIDED	
		WEST WALL	NO LIMIT	EXISTING PROVIDED	
		EAST WALL	NOT PERMITTED	EXISTING PROVIDED	
2.5 - INTERIOR FINISHES					
INTERIOR WALL AND CEILING FINISH REQUIREMENTS BY OCCUPANCY	TABLE 803.13	INTERIOR EXIT STAIRWAYS, RAMPS, AND EXIT PASSAGEWAYS	CLASS A	CLASS A	
		CORRIDORS, EXIT ACCESS STAIRWAYS ENCLOSURES	CLASS C	CLASS C	
		ROOMS AND ENCLOSED SPACES	CLASS C	CLASS C	
2.6 - FIRE PROTECTION SYSTEMS					
SPRINKLER REQUIREMENTS	903	M MERCANTILE	REQUIRED	SPRINKLERS PROVIDED	
2.7 -MEANS OF EGRESS					
CEILING HEIGHT	1003.2	THE MEANS OF EGRESS SHALL HAVE A CEILING HEIGHT OF NOT LESS THAN 7'-6"	REQUIRED	PROVIDED	SEE EGRESS PLANS
OCCUPANT LOAD	1004	MAXIMUM FLOOR AREA ALLOWANCES PER OCCUPANT	OCCUPANT LOAD DETERMINED BY OCCUPANCY USE PER TABLE 1004.5	PROVIDED	
MEANS OF EGRESS SIZING - REQUIRED SIZE BASED ON OCCUPANT LOAD	1005.3.1	STAIRWAY WIDTH	SPRINKLERED - 0.2"PER OCCUPANT	PROVIDED	
	1005.3.2	OTHER EGRESS COMPONENT WIDTH	SPRINKLERED - 0.15"PER OCCUPANT	PROVIDED	
MINIMUM/MINUMBER OF EXITS AND EXIT ACCESS DOORWAYS	1006	TWO EXITS SHALL BE PROVIDED FROM EACH SPACE WHERE THE DESIGN OCCUPANT LOAD OR COMMON PATH OF TRAVEL EXCEED VALUES OF TABLE 1006.2	MAX OCCUPANT LOAD M MERCANTILE: 49 OCCUPANTS A-2 ASSEMBLY: 49 OCCUPANTS MAX COMMON PATH M MERCANTILE: 115 FT A-2 ASSEMBLY: 75 FT	PROVIDED PROVIDED	
MINIMUM NUMBER OF EXITS PER STORY	1006.3.2	MINIMUM NUMBER OF EXITS PER STORY: 1-500 OCCUPANTS, 2; 501-1,000 OCCUPANTS, 3; MORE THAN 1,000 OCCUPANTS, 4.	2 EXITS PER STORY REQUIRED	PROVIDED	
EXIT ACCESS CONFIGURATION	1007.1	WHERE TWO EXITS ARE REQUIRED, EXITS SHALL BE SEPARATED	EXITS SHALL BE NO MORE THAN 1/3 THE MAX. TOTAL DIAGONAL LENGTH OF THE BUILDING OR AREA SERVED.	PROVIDED	

VILLAGE OF OAK PARK
CONSTRUCTION DOCUMENT(S)
REVIEWED FOR COMPLIANCE
KEEP A PRINTED APPROVED COPY OF THE PLANS ON SITE AT ALL TIMES FOR CONTRACTORS AND INSPECTORS
Signage is required to provide the following information: Address (as set forth in VOP Code Section 15.12.110 & 15.12.120)
Construction hours are limited to the following: 7:00 AM to 6:00 PM
Limited construction is permitted on the Village's public right of way (Parkway) only between the hours of 8:00 AM and 5:00 PM
These plans are processed in the parkway, do not move sidewalks or obstruct parkway without permission from Public Works Department (708) 358-5700 at least 48 hours in advance.
Construction fencing shall secure the site and maintained "tight" for up to 2.5' high for safety, when required.
Respect the neighboring properties, do not trespass on or damage neighboring properties without written permission from the adjacent property owner.
Maintain all parkways, sidewalks, roadway and alleys in a safe condition.
Any and all changes and/or deviations to the approved plans shall be proposed in writing, in triplicate, for a complete review and re-approval.

LICENSED ARCHITECT
THOMAS CLINTON MONTGOMERY
001.022640
STATE OF ILLINOIS

07/16/2025

ILLINOIS LICENSE NO: 001.022640
EXPIRATION: 11/30/2026

1144 Lake Street, LLC

LANDLORD TENANT SPACE RENOVATIONS

1144 W LAKE ST
OAK PARK, IL 60301

NO.	DESCRIPTION	DATE
1	ISSUED FOR PERMIT	07/16/2025

THOMAS MONTGOMERY
ARCHITECT
www.tcmontgomery.com

1701 W 19TH ST
CHICAGO IL 60608
773.999.9842

tom@tcmontgomery.com

JOB NO.: 25.068

COPYRIGHT **2025**: THOMAS MONTGOMERY ARCHITECT, EXPRESSLY RESERVES ITS COMMON LAW COPYRIGHT AND OTHER PROPERTY RIGHTS IN THESE PLANS. THESE PLANS ARE NOT TO BE REPRODUCED, CHANGED OR COPIED IN ANY FORM OR MANNER WHATSOEVER, NOR ARE THEY TO BE ASSIGNED TO ANY THIRD PARTY, WITHOUT FIRST OBTAINING THE EXPRESSED WRITTEN PERMISSION AND CONSENT OF THOMAS MONTGOMERY.

THESE DRAWINGS MAY HAVE BEEN REPRODUCED AT A SIZE DIFFERENTLY THAN ORIGINALLY DRAWN. OWNER AND ARCHITECT ASSUME NO RESPONSIBILITY FOR USE OF INCORRECT SCALE.

SCALE: As indicated

TITLE: **EGRESS PLANS & CODE MATRIX**

SHEET: **G-100**

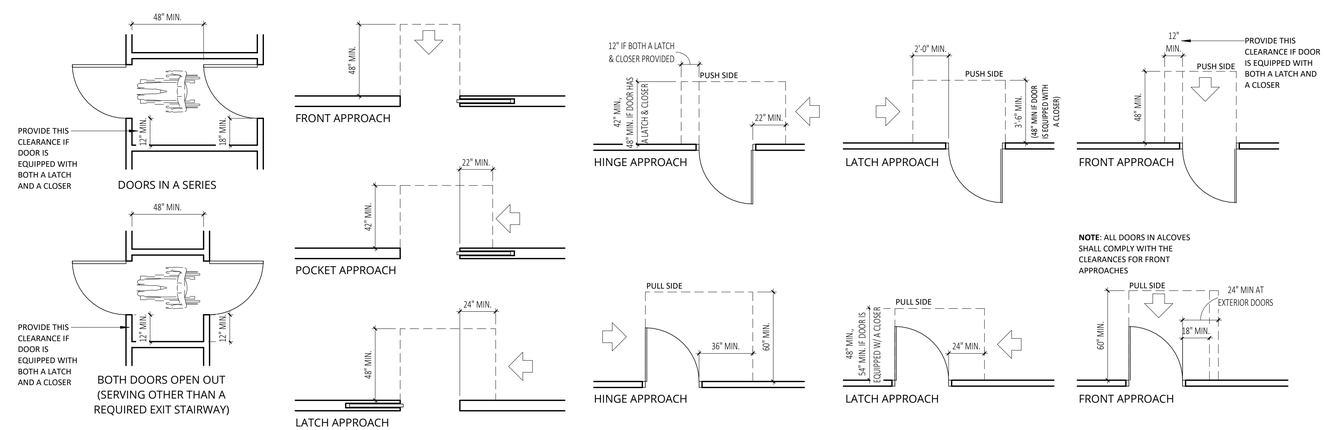

4 **MANEUVERING CLEARANCES AT DOORS**
1/4" = 1'-0"

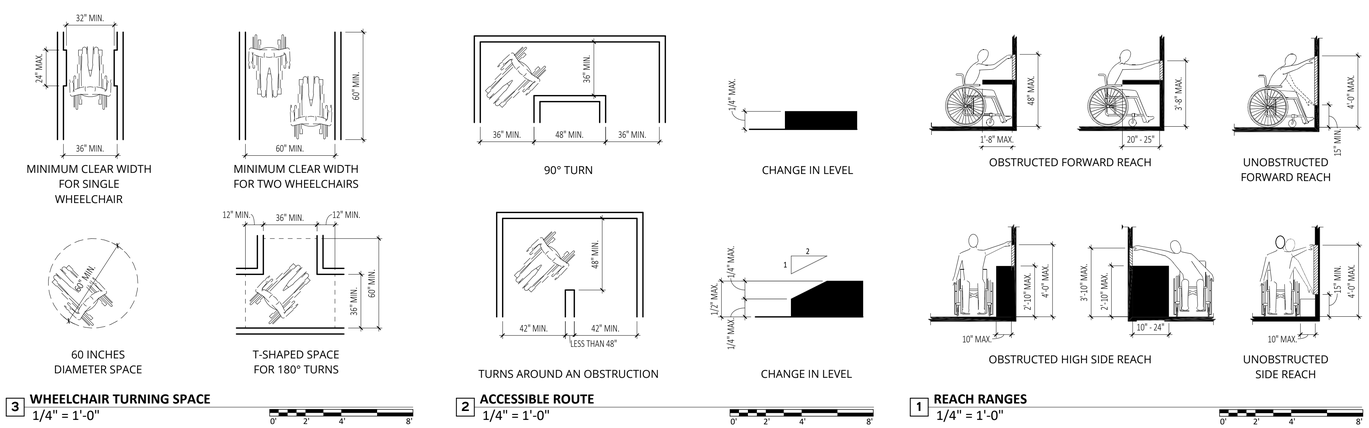

3 **WHEELCHAIR TURNING SPACE**
1/4" = 1'-0"

2 **ACCESSIBLE ROUTE**
1/4" = 1'-0"

1 **REACH RANGES**
1/4" = 1'-0"

0' 2' 4' 8'

VILLAGE OF OAK PARK
CONSTRUCTION DOCUMENT(S)
REVIEWED FOR COMPLIANCE
This construction document has been reviewed for compliance with the Village of Oak Park Municipal Code, including the Building Code, Zoning Ordinance, Historic Preservation Ordinance, and other applicable ordinances. Review for compliance does not include review for compliance with other codes, statutes, regulations, easements, covenants, restrictions or agreements. Review for compliance does not include review for accuracy or completeness of plans, specifications and other documents.
KEEP A PRINTED APPROVED COPY OF THE PLANS ON SITE AT ALL TIMES FOR CONTRACTORS AND INSPECTORS
- Signage is required to be posted on site showing the following emergency contact information:
  Address (no zip or apt.) (+1.2.3.4 ST NO)
  Coordinate (lat.,long.) (+1.2.3.4 ST NO)
- Lot line establishment is required to be fixed prior to the delivery of the first of each material.
- Trees shall be protected in the parkway; do not move obstacles or otherwise compromise the parkway without permission from the Forestry Dept. (708.848.7830).
- Construction fencing shall secure the site and maintained* tight to the 6.5' high for users, when:
  - Request the neighboring properties, do not trespass on or damage neighboring properties during construction, and keep the site free of debris and rodents.
  - Minimum: all gateways, walkways, sections and stairs in a safe condition.
Any and all changes and/or deviations to the approved plans shall be proposed in writing, in triplicate, for a complete review and re-approval.

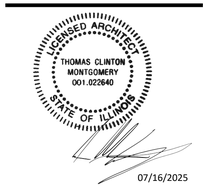

07/16/2025

ILLINOIS LICENSE NO: 001.022640
EXPIRATION: 11/30/2026

1144 Lake Street, LLC

LANDLORD TENANT SPACE RENOVATIONS

1144 W LAKE ST
OAK PARK, IL 60301

NO.	DESCRIPTION	DATE
1	ISSUED FOR PERMIT	07/16/2025

THOMAS MONTGOMERY
ARCHITECT
www.tcmontgomery.com

1701 W 19TH ST
CHICAGO IL 60608
773.999.9842

tom@tcmontgomery.com

JOB NO.: 25.068

COPYRIGHT **2025**: THOMAS MONTGOMERY ARCHITECT, EXPRESSLY RESERVES ITS COMMON LAW COPYRIGHT AND OTHER PROPERTY RIGHTS IN THESE PLANS. THESE PLANS ARE NOT TO BE REPRODUCED, CHANGED OR COPIED IN ANY FORM OR MANNER WHATSOEVER, NOR ARE THEY TO BE ASSIGNED TO ANY THIRD PARTY, WITHOUT FIRST OBTAINING THE EXPRESSED WRITTEN PERMISSION AND CONSENT OF THOMAS MONTGOMERY.

THESE DRAWINGS MAY HAVE BEEN REPRODUCED AT A SIZE DIFFERENTLY THAN ORIGINALLY DRAWN. OWNER AND ARCHITECT ASSUME NO RESPONSIBILITY FOR USE OF INCORRECT SCALE.

SCALE: 1/4" = 1'-0"

TITLE: **ACCESSIBILITY DIAGRAMS**

SHEET: **G-200**

8/19/2025 11:45:11 AM

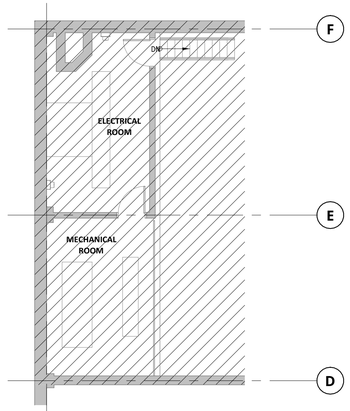

BOILER MEZZANINE PLAN - FOR REFERENCE
2 1/8" = 1'-0"

1 **BASEMENT PLAN**
1/8" = 1'-0"

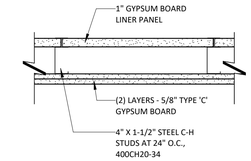

UL# U415
NON-BEARING

3 **2-HR RATED SHAFT PARTITION**
1 1/2" = 1'-0"

FLOOR PLAN LEGEND

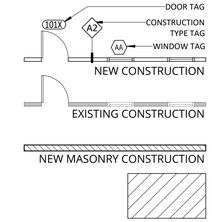

SHEET NOTES

1. DO NOT SCALE DRAWINGS, WRITTEN DIMENSIONS GOVERN.
2. IN CASE OF ANY DISCREPANCY WITHIN THE DRAWINGS, OR ANY DISCREPANCY BETWEEN THE DRAWINGS AND SITE CONDITIONS, NOTIFY ARCHITECT.
3. INDICATED DIMENSIONS ARE TO THE FINISHED FACE OF MATERIALS, U.O.N.
4. ALL DIMENSIONS MARKED "CLEAR", "CLR", OR "HOLD" SHALL BE MAINTAINED AND SHALL ALLOW FOR THICKNESS OF ALL WALL FINISHES, AND SHALL NOT VARY MORE THAN ±1/8" WITHOUT WRITTEN INSTRUCTION FROM ARCHITECT.
5. PROVIDE FIRE SAFE PENETRATIONS AT FIRE RATED PARTITIONS PER THE APPLICABLE UL ASSEMBLY. ALL EXISTING AND NEW UL RATED FLOOR PENETRATIONS FOR PIPING AND CONDUIT SHALL BE FULLY PACKED AND SEALED. FIRE SEAL ALL OPENINGS IN WALLS AND FLOORS AROUND DRAINS AND WATER LINES.
6. PROVIDE BLOCKING AS REQUIRED AT LOCATIONS INCLUDING, BUT NOT LIMITED TO: GRAB BARS, SHELVING, OVERHEAD CABINETS, SIGNAGE, TOILET ROOM ACCESSORIES, WALL MOUNTED EQUIPMENT, ETC.
7. ALL WORK SHALL BE ERECTED AND INSTALLED PLUMB, LEVEL, SQUARE AND TRUE, AND IN PROPER ALIGNMENT. "ALIGN" MEANS TO ACCURATELY LOCATE FINISHED FACES IN THE SAME PLANE.
8. WHERE EXISTING EXTERIOR WALLS OR CEILINGS ARE STRIPPED DOWN TO THE EXISTING STUDS, OR WHERE ANY EXTERIOR WALL STUD CAVITY IS EXPOSED, THE STUD CAVITIES MUST BE COMPLETELY FILLED WITH INSULATION.
9. PROVIDE ALL FIRESTOPPING AS REQUIRED BY CODE.
10. ANY TYPE OF CONSTRUCTION TESTING, WHETHER STRUCTURAL/SPECIAL INSPECTIONS, HVAC, PLUMBING, FUEL GAS TESTING, OR ANY TESTING NOT MENTIONED, A COPY OF SUCH TESTING SHALL BE PROVIDED TO THE VILLAGE OF OAK PARK FOR THE PERMANENT BUILDING PERMIT FILE.

SAFEGUARDS DURING CONSTRUCTION

1. EACH CONTRACTOR SHALL OBSERVE ALL LOCAL, STATE, AND FEDERAL RULES AND REGULATIONS REGARDING SAFETY AND SHALL PROVIDE ALL NECESSARY EQUIPMENT, SCAFFOLDING, PLANKING, RAILING, SHEETING, ETC. IN ORDER TD SAFEGUARD AND PROTECT THE HEALTH, AND WELL BEING OF ALL THE WORKERS EMPLOYED BY THE CONTRACTOR ON THE CONSTRUCTION SITE. EACH CONTRACTOR SHALL EXPLAIN, INSTRUCT, AND DIRECT ALL WORKERS UNDER HIS JURISDICTION TO OBSERVE ALL THE NECESSARY SAFETY, RULES AND REGULATIONS, EACH CONTRACTOR SHALL MAKE DAILY INSPECTIONS TO VERIFY THAT ALL SAFETY RULES ARE BEING OBSERVED.
2. ALL PROCEDURES REGARDING SAFETY ARE THE RESPONSIBILITY OF THE CONTRACTOR. CONTRACTOR SHALL PROCURE AND PAY FOR THE INSURANCE TO INDEMNIFY AND HOLD HARMLESS THE OWNER, AND THEIR AGENTS, EMPLOYEES AND CONSULTANTS FROM AND AGAINST ALL CLAIMS, DAMAGES, LOSS AND EXPENSES, INCLUDING ATTORNEYS FEES, RESULTING FROM INJURIES, DEATH, SICKNESS, DISEASES, OR ANY OTHER PHYSICAL HANDICAP ARISING FROM NON-OBSERVANCE OF THE SAFETY RULES AND REGULATIONS.

VILLAGE OF OAK PARK
CONSTRUCTION DOCUMENT(S)
REVIEWED FOR COMPLIANCE
KEEP A PRINTED APPROVED COPY OF THE PLANS ON SITE AT ALL TIMES FOR CONTRACTORS AND INSPECTORS
- Signage is required to be posted on the premises showing contact information
Violations dial 311 (+1 708 358 5311)
Inspections dial 708 358 5400
- Approved plans are required to be kept on the site of the work
- Trees shall be protected in the parkway; do not move sidewalks or obstruct parkway without approval; no parking/storage in parkway; no work in the parkway
- Construction fencing shall secure the site and maintained right to the 8.5' sign for users, when
- Respect the neighboring properties; do not trespass on or damage neighboring properties
Maintain the site in a safe and sanitary condition
- Maintain all geotechnic, estimate, business and plans in a safe condition
Any and all changes and/or deviations to the approved plans shall be proposed in writing, in triplicate, for a complete review and re-approval.

ILLINOIS LICENSED ARCHITECT
THOMAS CLINTON MONTGOMERY
001.022640
STATE OF ILLINOIS
07/16/2025

ILLINOIS LICENSE NO: 001.022640
EXPIRATION: 11/30/2026

1144 Lake Street, LLC

LANDLORD TENANT SPACE RENOVATIONS

1144 W LAKE ST
OAK PARK, IL 60301

NO.	DESCRIPTION	DATE
1	ISSUED FOR PERMIT	07/16/2025

THOMAS MONTGOMERY
ARCHITECT
www.tcmontgomery.com

1701 W 19TH ST
CHICAGO IL 60608
773.999.9842

tom@tcmontgomery.com

JOB NO.: 25.068

COPYRIGHT **2025**: THOMAS MONTGOMERY ARCHITECT, EXPRESSLY RESERVES ITS COMMON LAW COPYRIGHT AND OTHER PROPERTY RIGHTS IN THESE PLANS. THESE PLANS ARE NOT TO BE REPRODUCED, CHANGED OR COPIED IN ANY FORM OR MANNER WHATSOEVER, NOR ARE THEY TO BE ASSIGNED TO ANY THIRD PARTY, WITHOUT FIRST OBTAINING THE EXPRESSED WRITTEN PERMISSION AND CONSENT OF THOMAS MONTGOMERY.

THESE DRAWINGS MAY HAVE BEEN REPRODUCED AT A SIZE DIFFERENTLY THAN ORIGINALLY DRAWN. OWNER AND ARCHITECT ASSUME NO RESPONSIBILITY FOR USE OF INCORRECT SCALE.

SCALE: As indicated

TITLE: **BASEMENT PLAN**

SHEET: **A-100**

8/19/2025 11:45:12 AM

DOOR, HARDWARE, AND WINDOW NOTES

GENERAL DOOR NOTES

1. ALL DOORS AND FRAMES TO BE INSTALLED PLUMB, STRAIGHT AND TRUE. MAINTAIN ADEQUATE TOLERANCES AND CLEARANCES SO THAT ALL DOORS FIT AS SPECIFIED AND SWING/SLIDE PROPERLY. ANY DEVIATION FROM THIS WILL BE REJECTED BY OWNER AS UNACCEPTABLE AND WILL BE REPLACED AT SUPPLIER'S AND INSTALLER'S SOLE COST.
2. ALL GLAZING AND SIDELITES TO BE CLEAR TEMPERED GLASS, U.O.N.
3. DOOR OPENINGS IN PARTITIONS NOT DIMENSIONED ARE TO BE LOCATED WITHIN 4" OF ADJACENT PARTITION, U.O.N.

ALUMINUM STOREFRONT NOTES

1. PROVIDE STOREFRONT SYSTEM COMPLETE WITH GLAZING AS PER DRAWINGS.
2. DIMENSIONS AND ALIGNMENTS SHALL BE AS PER DRAWINGS AND WINDOW SCHEDULE. FIELD VERIFY ALL OPENING DIMENSIONS PRIOR TO ORDERING MATERIAL OR FABRICATING STOREFRONT SYSTEM.
3. INSTALL STOREFRONT SYSTEM ACCORDING TO MANUFACTURER'S INSTRUCTIONS. INSTALL STOREFRONT SYSTEM THAT IS WEATHERTIGHT AND ALLOWS NO AIR INFILTRATION. INSTALL HARDWARE TO OPERATE EASILY AND WITHOUT STICKING.
4. AFTER INSTALLATION, INSPECT STOREFRONT SYSTEM TO FIND AND REPAIR DAMAGE. REPAIR OR REPLACE ANY DAMAGED MATERIALS AS DIRECTED BY THE OWNER. ANY COSTS FOR REPLACING WINDOWS FOR NON-COMPLIANCE WILL BE PAID BY THE CONTRACTOR.
5. TEMPERED GLAZING SHALL BE PROVIDED AT LOCATIONS WITH GLASS INSTALLED LESS THAN 24 INCHES ABOVE THE FINISHED FLOOR, IN DOORS AND SIDELIGHTS.

ACCESSIBLE DOOR NOTES

1. SEE ACCESSIBILITY DIAGRAMS FOR REQUIRED ACCESSIBLE DOOR CLEARANCES AND OTHER ACCESSIBLE DOOR AND HARDWARE REQUIREMENTS.
2. ALL INTERIOR DOORS SHALL HAVE A MAXIMUM OPENING FORCE OF 5 LBS. ALL EXTERIOR DOORS SHALL HAVE A MAXIMUM OPENING FORCE OF 8.5 LBS. ALL FIRE-RATED DOORS SHALL HAVE A MAXIMUM OPENING FORCE OF 15 LBS.
3. ALL DOORS SHALL BE EQUIPPED WITH SINGLE-EFFORT, NON-GRASP HARDWARE (I.E., LEVER OR LOOP) CENTERED BETWEEN 30" AND 44" ABOVE THE FLOOR.
4. ALL DOORWAYS SHALL HAVE A MAXIMUM THRESHOLD NOT TO EXCEED 1/4". RAISED THRESHOLDS AND FLOOR LEVEL CHANGES AT ACCESSIBLE DOORWAYS SHALL BE BEVELED WITH A SLOPE NO GREATER THAN 1:2.

HARDWARE NOTES

1. PROVIDE ALL PARTS NECESSARY FOR PROPER OPERATION OF ALL DOORS.
2. ALL DOORS MUST BE OPERABLE FROM THE INSIDE WITHOUT THE USE OF KEY, SPECIAL KNOWLEDGE OR EFFORT.
3. GENERAL CONTRACTOR TO PROVIDE AND INSTALL CYLINDERS AS REQUIRED BY OWNER AND LOCKS SHALL BE KEYED AS PER OWNER'S REQUIREMENTS.
4. INSTALL EACH HARDWARE ITEM PER MANUFACTURERS INSTRUCTIONS AND RECOMMENDATIONS. DO NOT INSTALL SURFACE-MOUNTED ITEMS UNTIL FINISHES HAVE BEEN COMPLETED ON THE SUBSTRATE. SET UNITS LEVEL, PLUMB, AND TRUE TO LINE AND LOCATION. ADJUST AND REINFORCE THE ATTACHMENT SUBSTRATE AS NECESSARY FOR PROPER INSTALLATION AND OPERATION. ADJUST AND CHECK EACH OPERATING ITEM OF HARDWARE AND EACH DOOR TO ENSURE PROPER OPERATION OR FUNCTION OF EVERY UNIT. REPLACE UNITS WHICH CANNOT BE ADJUSTED TO OPERATE FREELY AND SMOOTHLY.
5. VERIFY ALL HARDWARE REQUIREMENTS WITH OWNER BEFORE ORDERING.

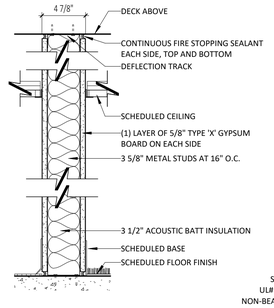

A **TYPE A - UN-RATED WALL**
1 1/2" = 1'-0"

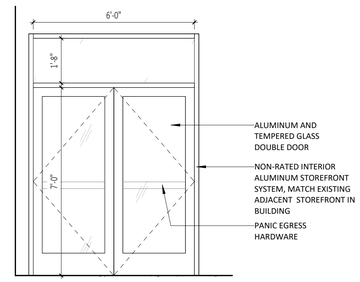

3 **DOOR ELEVATION 2**
3/8" = 1'-0"

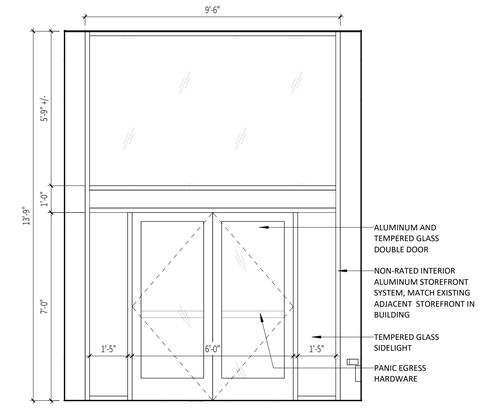

2 **DOOR ELEVATION**
3/8" = 1'-0"

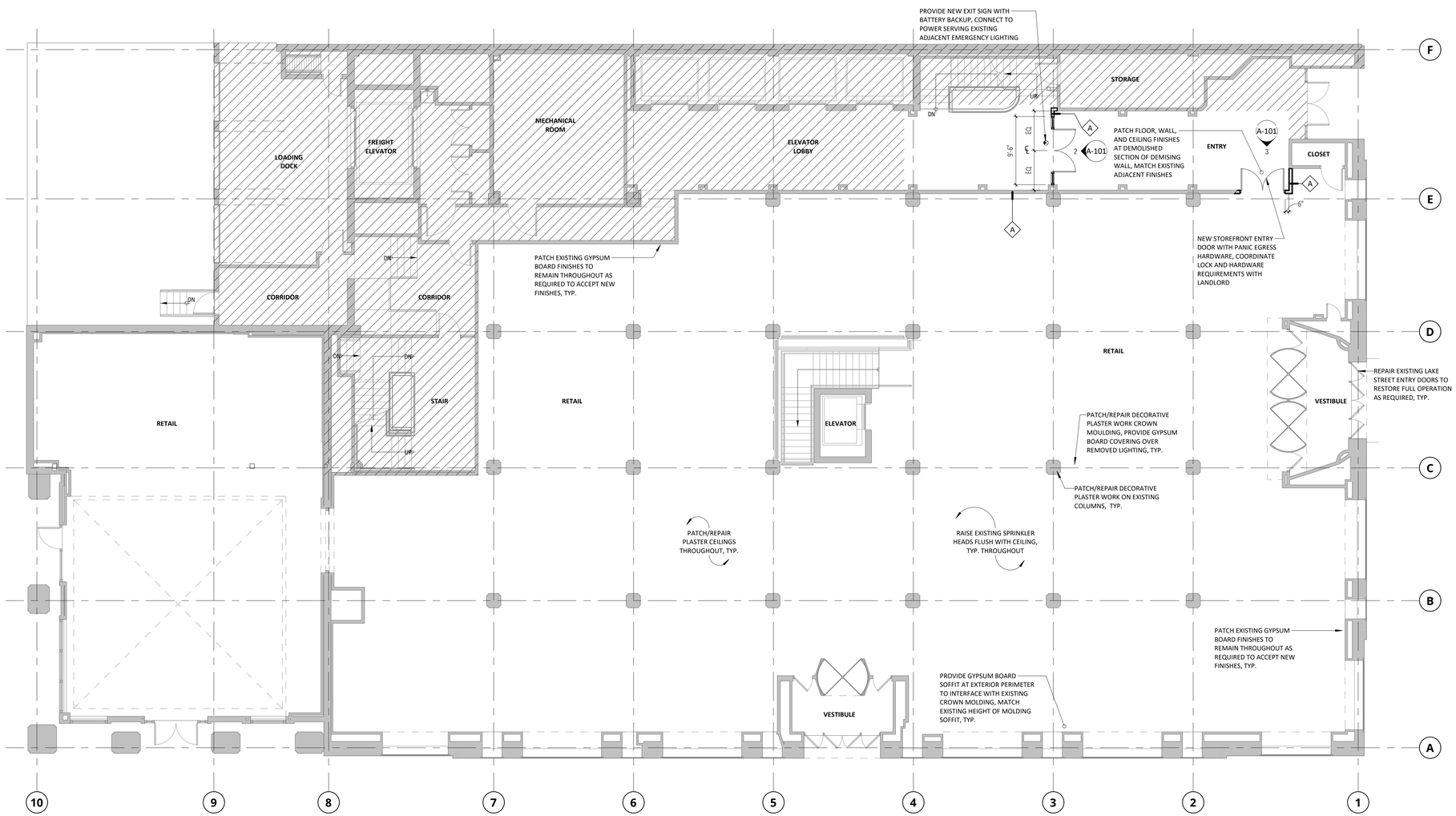

1 **FIRST FLOOR PLAN**
1/8" = 1'-0"

FLOOR PLAN LEGEND

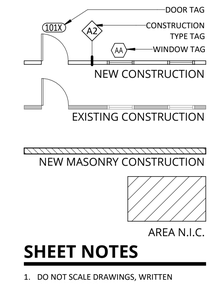

SHEET NOTES

1. DO NOT SCALE DRAWINGS, WRITTEN DIMENSIONS GOVERN.
2. IN CASE OF ANY DISCREPANCY WITHIN THE DRAWINGS, OR ANY DISCREPANCY BETWEEN THE DRAWINGS AND SITE CONDITIONS, NOTIFY ARCHITECT.
3. INDICATED DIMENSIONS ARE TO THE FINISHED FACE OF MATERIALS, U.O.N.
4. ALL DIMENSIONS MARKED "CLEAR", "CLR", OR "HOLD" SHALL BE MAINTAINED AND SHALL ALLOW FOR THICKNESS OF ALL WALL FINISHES, AND SHALL NOT VARY MORE THAN ±1/8" WITHOUT WRITTEN INSTRUCTION FROM ARCHITECT.
5. PROVIDE FIRE SAFE PENETRATIONS AT FIRE RATED PARTITIONS PER THE APPLICABLE UL ASSEMBLY. ALL EXISTING AND NEW UL RATED FLOOR PENETRATIONS FOR PIPING AND CONDUIT SHALL BE FULLY PACKED AND SEALED. FIRE SEAL ALL OPENINGS IN WALLS AND FLOORS AROUND DRAINS AND WATER LINES.
6. PROVIDE BLOCKING AS REQUIRED AT LOCATIONS INCLUDING, BUT NOT LIMITED TO: GRAB BARS, SHELVING, OVERHEAD CABINETS, SIGNAGE, TOILET ROOM ACCESSORIES, WALL MOUNTED EQUIPMENT, ETC.
7. ALL WORK SHALL BE ERECTED AND INSTALLED PLUMB, LEVEL, SQUARE AND TRUE, AND IN PROPER ALIGNMENT. "ALIGN" MEANS TO ACCURATELY LOCATE FINISHED FACES IN THE SAME PLANE.
8. WHERE EXISTING EXTERIOR WALLS OR CEILINGS ARE STRIPPED DOWN TO THE EXISTING STUDS, OR WHERE ANY EXTERIOR WALL STUD CAVITY IS EXPOSED, THE STUD CAVITIES MUST BE COMPLETELY FILLED WITH INSULATION.
9. PROVIDE ALL FIRESTOPPING AS REQUIRED BY CODE.
10. ANY TYPE OF CONSTRUCTION TESTING, WHETHER STRUCTURAL/SPECIAL INSPECTIONS, HVAC, PLUMBING, FUEL GAS TESTING, OR ANY TESTING NOT MENTIONED, A COPY OF SUCH TESTING SHALL BE PROVIDED TO THE VILLAGE OF OAK PARK FOR THE PERMANENT BUILDING PERMIT FILE.

SAFEGUARDS DURING CONSTRUCTION

1. EACH CONTRACTOR SHALL OBSERVE ALL LOCAL, STATE, AND FEDERAL RULES AND REGULATIONS REGARDING SAFETY AND SHALL PROVIDE ALL NECESSARY EQUIPMENT, SCAFFOLDING, PLANKING, RAILING, SHEETING, ETC. IN ORDER TO SAFEGUARD AND PROTECT THE HEALTH, AND WELL BEING OF ALL THE WORKERS EMPLOYED BY THE CONTRACTOR ON THE CONSTRUCTION SITE. EACH CONTRACTOR SHALL EXPLAIN, INSTRUCT, AND DIRECT ALL WORKERS UNDER HIS JURISDICTION TO OBSERVE ALL THE NECESSARY SAFETY, RULES AND REGULATIONS, EACH CONTRACTOR SHALL MAKE DAILY INSPECTIONS TO VERIFY THAT ALL SAFETY RULES ARE BEING OBSERVED.
2. ALL PROCEDURES REGARDING SAFETY ARE THE RESPONSIBILITY OF THE CONTRACTOR. CONTRACTOR SHALL PROCURE AND PAY FOR THE INSURANCE TO INDEMNIFY AND HOLD HARMLESS THE OWNER, AND THEIR AGENTS, EMPLOYEES AND CONSULTANTS FROM AND AGAINST ALL CLAIMS, DAMAGES, LOSS AND EXPENSES, INCLUDING ATTORNEYS FEES, RESULTING FROM INJURIES, DEATH, SICKNESS, DISEASES, OR ANY OTHER PHYSICAL HANDICAP ARISING FROM NON-OBSERVANCE OF THE SAFETY RULES AND REGULATIONS.

VILLAGE OF OAK PARK
CONSTRUCTION DOCUMENT(S)
REVIEWED FOR COMPLIANCE
KEEP A PRINTED APPROVED COPY OF THE PLANS ON SITE AT ALL TIMES FOR CONTRACTORS AND INSPECTORS

LICENSED ARCHITECT
THOMAS CLINTON MONTGOMERY
001.022640
STATE OF ILLINOIS
07/16/2025

ILLINOIS LICENSE NO: 001.022640
EXPIRATION: 11/30/2026

1144 Lake Street, LLC

LANDLORD TENANT SPACE RENOVATIONS

1144 W LAKE ST
OAK PARK, IL 60301

NO.	DESCRIPTION	DATE
1	ISSUED FOR PERMIT	07/16/2025

THOMAS MONTGOMERY
ARCHITECT
www.tcmontgomery.com

1701 W 19TH ST
CHICAGO IL 60608
773.999.9842

tom@tcmontgomery.com

JOB NO.: 25.068

COPYRIGHT **2025**: THOMAS MONTGOMERY ARCHITECT, EXPRESSLY RESERVES ITS COMMON LAW COPYRIGHT AND OTHER PROPERTY RIGHTS IN THESE PLANS. THESE PLANS ARE NOT TO BE REPRODUCED, CHANGED OR COPIED IN ANY FORM OR MANNER WHATSOEVER, NOR ARE THEY TO BE ASSIGNED TO ANY THIRD PARTY, WITHOUT FIRST OBTAINING THE EXPRESSED WRITTEN PERMISSION AND CONSENT OF THOMAS MONTGOMERY.

THESE DRAWINGS MAY HAVE BEEN REPRODUCED AT A SIZE DIFFERENTLY THAN ORIGINALLY DRAWN. OWNER AND ARCHITECT ASSUME NO RESPONSIBILITY FOR USE OF INCORRECT SCALE.

SCALE: As indicated

TITLE: **FIRST FLOOR PLAN**

SHEET: **A-101**

8/18/2025 11:43:13 AM

Development Customer Services Department

COMMERCIAL / MULTI-FAMILY / MIXED-USE
Construction Site Requirements

The Village of Oak Park
123 Madison Street
Oak Park, IL. 60302-4272

Permits@Oak-Park.us

CONSTRUCTION DOCUMENTS: Shall remain on site during the entire project.

1) PERMIT / PERMISSION TO WORK placard(s) must be displayed in a conspicuous place visible form the public street.
2) CUT SHEETS aka Manufacturer Documentation is to be available to the inspector for all items installed.
3) APPROVED "JOB COPY" PLANS Readable stamped plans shall be on site until Building Final has been fully approved. Plans submitted electronically through the village portal shall be printed by the applicant (marked (Stamped)) and be retained on site for contractors and inspectors.

Failure to keep documents on site at all times may result in a failed inspection(s), a "STOP WORK" order being placed on the project, and/or citations being issued with possible fines. Having these documents on site helps all Village employees access scope of work for inspections and during emergency situations.

JOB SITE MAINTENANCE:
- Signage is required that shows the address of the project, the contractor name, and contact information.
- Before you dig call J.U.L.I.E. @ 811.
- Construction hours are 7:00am through 6:00pm (Municipal Code Article 16).
- Address numbers shall be posted in the front and in the alley of the site (if applicable).
- Trees shall be protected in the parkways.
- Do not block sidewalks or alleyways.
- Portable toilets shall be properly maintained a minimum of 10' from the lot line.
- 6' Construction fencing shall be required.
- Respect the neighboring properties; do not trespass on or damage neighboring properties.
- Keep the site clean, safe, organized, and free from debris.
- Maintain all guardrails, walkways, ladders, and stain in a safe condition.

COMPLETION & OCCUPANCY:
Once the project is completed, all projects require a final inspection. A Certificate of Occupancy is often required for new construction and newly remodeled spaces.

IN EMERGENCY CALL
Police / Fire @ 911
NICOR @ 888-642-6748
ComEd @888-344-7661
J.U.L.I.E. @ 811

ADOPTED VILLAGE OF OAK PARK CODES
In addition to the amendments posted on-line at www.oak-park.us, Oak Park has adopted the following codes:
- International Building Code - 2021 Edition
- International Energy Conservation Code - 2021 Edition
- National Electric Code - 2020 Edition
- International Mechanical Code – 2021 Edition
- International Fire Code - 2021 Edition
- International Existing Building Code – 2021 Edition
- International Fuel Gas Code – 2021 Edition
- Illinois State Plumbing Code - 2014 Addition
- Illinois Accessibility Code

Other Codes to Consider
- OSHA, FEMA, ADA, Cook County, State of Illinois, United States

Code books may be purchased by contacting the International Code Council, 800.214.4321 or www.intlcode.org
These codes are available for public free access on-line at https://codes.iccsafe.org/public/collections/I-Codes

TO SCHEDULE AN INSPECTION
CALL 708-358-5430 or www.oak-park.us
- In general, nothing should be concealed unless a passing inspection has been issued.
- Inspections must be called for a minimum of 24 business hours in advance, although it is not guaranteed that an inspection time will be available in 24 hours.
- For increased likelihood in getting an inspection on the day and time you want, call 3 business days before you want the inspection.
- Please have your permit number(s) when phoning in for an inspection.

REQUIRED INSPECTION CHECKLIST
The Village of Oak Park requires the following inspections to pass prior to construction continuance.

	Pre-Demolition	A pre-demolition inspection of the primary structure after all required fencing, barricades, etc. are installed.
	Footing (Pre-pour)	Inspected after a footing is formed out, including all steel bars, before concrete is placed.
	Foundation (Pre-pour)	Inspected after a foundation is formed out, including all reinforcing steel bars, before concrete is placed.
	Foundation (Backfill)	Inspected after foundation waterproofing, exterior drain tile, exterior insulation, and anchoring or bracing have been installed before it is covered.
	Plumbing (Underground) (Storm, Sanitary Sewer and/or Water)	PRIVATE PROPERTY: inspect plumbing / sewer pipes before it is covered. Call D.S.C Right-of-way: Inspect plumbing / sewer pipes before it is covered. Call Public Works.
	Electric (Underground)	Inspected after electrical work below grade is complete before it is covered.
	HVAC (Underground)	Inspected after gas lines or ducts are installed below grade before it is covered.
	Slab (Pre-pour)	Inspected after forms, sub-grade, reinforcement, interior drain tile, vapor barrier are installed, and other required below grade inspections have passed, before concrete is placed or pavers are installed.
	Plumbing (Rough)	Inspected after plumbing work in concealed spaces is completed, before being covered.
	Electric (Rough)	Inspected after electric work in concealed spaces including wire pull is completed, before being covered. Splices may be done but is not required. LV and communication cables must also be installed and inspected.
	HVAC (Rough)	Inspected after ducts, vents, and/or gas lines are installed in concealed spaces, before being covered.
	Framing (Structure)	Inspected after other required rough inspections have passed, after all framing is completed, before walls and ceilings are insulated. NOTE: Fire-stopping and fire blocking shall be installed.
	Insulation	Inspected after the framing inspection has passed, after insulation is installed, before being covered.
	Drywall	**Required ONLY for fire rated construction.** Inspected after each layer of drywall is installed, before taping or installing additional layers of drywall, wallpaper, ceiling tiles, paint, or similar is installed.
	Electric (Service)	Inspected after the electric service is installed. *The electrical inspector notifies ComEd after a service is passed.*
	Plumbing (Service)	Inspected after the plumbing service is installed before being covered. (IDPH)
	Plumbing (Final)	Inspected after all plumbing work is complete. (Any service work will be listed as a service inspection).
	Electric (Final)	Inspected after all electric work is complete. (Any service work will be listed as a service inspection).
	HVAC (Final)	Inspected after all HVAC equipment is installed and operating.
	Energy (Final)	Inspects insulation certificates and a blower door test, etc.
	Building (Final) **REQUIRED**	Inspected after all other phases of work, including any other Village Department final inspections are approved, after all work is complete.
Other Inspections (If Applicable)		
	Elevator (Final)	Inspected after all equipment regulated by the Elevator Safety & Regulation Act is installed and operating.
	Fire (Rough & Final)	Inspects sprinkler systems and other associated fire control devices, KNOX box locations.
	Health (Rough & Final)	All food, daycares, and body art establishments.
	PW – Forestry	Tree oversight.
	PW – Engineering (Rough & Final)	Inspects all drainage systems and major water systems, along with MWRD.

NOTE: Additional inspections required by other village departments, such as Fire (708-358-5609), Health (708-358-5489), Engineering (708-358-5722) or MWRD (708-588-4055) are not included in this list. It is the contractor's and/or owner's responsibility to assure they have obtained all the necessary inspections required by each department in proper sequence as related to the inspections listed below.

Special inspections or other third party testing is required to be hired by and paid for by the contractor / owner of record. All testing results whether required by code or done for other reasons are to be uploaded to the Village Portal and available on site for inspections. Some examples would be: soil or concrete testing, welding, spray-applied fire-resistant materials, HVAC pressure balance and testing, and infiltration blower door testing.

ELECTRICAL: GENERAL
- ALL ELECTRICAL ITEMS TO BE U.L. LISTED AND LABELED - cut sheets to be available at inspection.
- All receptacles located in Kitchen (including prep areas) and Bathroom areas are to be GFCI protected.
- Showroom outlets are required above every 12' of store front windows
- A GFCI outlet is required within 25' of all mechanical equipment.
- Outdoor outlets are required to be listed WR (Weather Resistant) and have an in-use cover.
- The branch circuit feeding the emergency lights shall be the same branch circuit as that feeding the normal lighting fixtures in the area.
- All Telecom and fire alarm cables must have their own raceway which is secured to the structure.
- Please note that all low voltage cabling shall be secured within a cable tray.
- Provide a minimum of 1 foot-candle of emergency lighting along all areas of the egress corridors.
- An approved exit sign shall mark all exit doors and paths & be readily visible from any direction of egress travel.

ELECTRICAL: SERVICE
- All work to be done per ComEd "Red Book"
- The service panel, exterior electrical meter, disconnects shall have a 30"x3' working clearance.
- Overhead wires and service drop must be a minimum of 5 feet away from operable windows.
- Overhead service drop clearances:

1. At the service entrance: 10 feet above the ground
2. Above roofs with a slope of less than 4 in 12: 8 feet
3. Above roofs with a slope of 4 in 12 or greater: 3 feet
4. Over public streets, alleys, roads, and parking areas subject to truck traffic: 18 feet
5. Service conductor clearance from doors, porches, balconies, ladders, stairs, etc.: 3 feet

MANUFACTURED ITEMS
- Any and all manufactured items must be rated for the use and installed per manufacturer's installation instructions.
- Provide a copy of the manufacturer's installation instructions for the permit file and site inspection.

EGRESS
- All routes / hallways shall be a minimum of 36" with occupancy of 50 or less. Greater than 50 refer to the IBC.
- All Bedrooms, Basements, Basement Living Spaces, and Basement Bedrooms shall have egress directly to the exterior grade by a door or egress window.

ENERGY
- Refer to the certificate from the design professional or follow the prescribed ratings on the following charts:

Climate Zone 5	OTHER	Group R
Roof-Insulation entirely above the roof deck-	R30ci	**SAME**
Roof-Metal Buildings	R19+R11 LS	**SAME**
Roof-Attic & Other	R49	**SAME**
Walls-Above Grade-Mass	R11.4ci	R13.3ci
Walls- Above Grade-Metal Buildings	R13+R 14ci	**SAME**
Walls- Above Grade-Metal Frame	R13+R10ci	**SAME**
Walls-Wood Frame and Other	R13+7.5ci or R20+3.8ci	**SAME**
Walls-Below Grade	R7.5ci	R10ci
Floors-Mass below grade	**R14.6 ci**	**R16.7ci**
Floors-Joist/framing	R30	R30
Unheated Slabs	R15 for 24" below	R20 for 24" below
Heated Slabs	R15 for 36" below +R5 full slab	**SAME**

- U-factor for new windows shall be 0.36 or less for a fixed unit.
- U-factor for new windows shall be 0.45 or less for an operable unit.
- All HVAC ductwork shall be sealed.
- Building entrances which serve the public and open into spaces with an area of 3000 sf or more shall be protected with an enclosed vestibule, with all doors opening into and out of the vestibule equipped with self-closing devices. Vestibules shall be designed so that in passing through the vestibule it is not necessary for the interior and exterior doors to open at the same time.
- Ductwork shall be insulated in unconditioned spaces.
- Heating water pipes or hot water pipes shall be wrapped.
- Heated exteriors shall be radiant heat.
- Wood-burning fireplaces shall have tight fitting air dampers.
- Provide the proposed detail of the lighting controls.
- Provide occupancy sensors in spaces less than 300sf, where lights shall shut off within 30 minutes after occupants leave the space.
- A MINIMUM of 100% of all lamps in permanently installed light fixtures shall be high efficiency lamps.
- Provide an electric detail pertaining to the required tandem wiring if fluorescent lighting.
- Provide occupant sensor controls with manual override or time switch controls for lighting in classrooms/lecture/training rooms, conference/meeting/multi-purpose rooms, copy/print rooms, lounges, employee lunch and break rooms, private offices, restrooms, storage rooms, janitorial closets, locker rooms, other spaces 300 sf or less that are enclosed by floor-to-ceiling height partitions, and warehouses. Where spaces are provided with time clock controls for lighting, they shall also be provided with light reduction controls that allows the occupant to reduce the connected lighting load in a reasonably uniform illumination pattern by at least 50 percent.

GAS PIPING
- The gas meter shall be accessible.
- All devices shall have accessible shut offs.
- Provide a copy of the manufacturer's installation instructions for the permit file and site inspection.
- Inspection required.
- In multiple tenant and multiple family buildings shutoff valves shall be provided for each tenant. Each tenant shall have access to the shutoff valve serving that tenant's space.

GLAZING
- Bathtub glazing shall be safety glazed / tempered glass.
- Glazing at the staircase will be safety glazed.
- Glazing at the door swing will be safety glazed.
- Skylights shall be safety glazed.
- See other requirements in the IBC.

STAIR REQUIREMENTS FOR COMMERCIAL AND MULTI-FAMILY BUILDINGS
- Minimum stair width: 44" – if occupancy is less than 50 people, minimum width = 36"
- Minimum tread width: 11"
- Maximum riser height: 7"
- Minimum riser height: 4"
- Minimum landing width: same as stair width.
- Maximum height of a flight of stairs between a floor or landing: 12 feet
- Minimum clear headroom above nosing: 6' 8"
- Nosing's are required at each tread.
- Nosing projection from riser if nosing's are provided: ②" to 1 ¼"
- Handrails required on both sides of the stairs.
- Intermediate handrails are required so that all portions of the stair are within 30" from a handrail.
- Spacing of handrail from the wall: 1 ½" (Maximum and Minimum)
- Handrail brackets shall be attached to the bottom of the handrail and shall attach to the wall 1 ½" below the bottom of the handrail.
- Handrails shall return to the wall.
- Height of handrails: 34" to 38" above nosing
- Handrails extension at bottom floor, top floor or landing: 12"
- Size of handrails

• Circular cross section: 1 ¼" diameter to 2" diameter
•Rectangular cross section: Perimeter of 4" to 6 ¼" with maximum dimension of 2 ¼"

- Guards: required at stairs, ramps, landings and floor openings which are more than 30" higher than surface below.
- Height of guards above stair nosing, floor or landing: 42" minimum
- Spacing of balusters in handrails and guards: sized as to not to allow passage of a 4" sphere between balusters and 6" sphere at the triangular opening formed by the tread, riser and bottom rail of a guard or handrail.

HVAC
- Heating system: Provide equipment and distribution system capable of maintaining indoor temperature at 68 degrees F at -10 degrees F exterior.
- Provide a mechanical ventilation schedule verifying the area of each room or space, the mechanical code occupant load and the outside air required for each room or space as required by the IMC Table 403.3.
- Provide ACCA Manuals S and J results to determine heating and cooling sizing.
- Per VOP Guidelines, HVAC, A/C & Exhaust shall not cause nuisances and shall be located:
- Minimum of TEN (10') FEET from lot lines and openable windows.
- Minimum of THREE (3') FEET from exterior walls and roofs.
- Per VOP Guidelines, Kitchen & Bath exhaust shall not cause nuisances and shall be located:
- Minimum of THREE (3') FEET from lot lines and openable windows.
- Minimum of TEN (10') FEET from mechanical intakes.
- For commercial, multi-family and mixed-use buildings, provide a HVAC test and balance report for village approval prior to obtaining a certificate of occupancy.
- Ducts shall be supported with approved hangers at intervals not exceeding 10 feet or by other approved duct support systems designed in accordance with the International Building Code- flexible and other factory-made ducts shall be supported in accordance with the manufacturer's installation instructions.

PLUMBING
- A Metropolitan Water Reclamation District Permit may be required, refer to the City Engineer.
- WATER SERVICE BACKFLOW PREVENTION:

The following buildings will need to install an RPZ (Reduced Pressure Zone backflow preventer) device on the potable water supply:
- New commercial, or mixed-use commercial and residential buildings.
- Additions to existing commercial or mixed-use commercial and residential buildings.
- Existing commercial or mixed-use commercial and residential buildings which undergo Alterations Level 2 or Level 3 in accordance with the International Existing Building Code, where a minimum of 25% of existing plumbing work is to alter.
- EXCEPTION: If there is no existing floor drain within ten feet from the water meter, a testable double check valve is required in lieu of an RPZ.
- Backflow prevention devices will require certification by a certified backflow inspector at the time of installation and annually thereafter.
- An RPZ is required on all equipment directly connected to the water supply.
- The water meter shall be accessible and serviceable.
- All devices shall have accessibility shut offs.
- Provide a copy of the manufacturer's installation instructions for the permit file and site inspection.
- Any project proposing a new plumbing fixture (one or more) shall complete a Village of Oak Park "Water Service Fixture Unit Calculation Worksheet" to assess the need to upgrade the water system. The required form is available on the Village's website and shall be submitted with all required documents.

FIRE BLOCKING / DRAFT STOPPING
- Fire blocking / Draft stopping shall be installed and be a maximum ten feet on center, horizontal and vertical.

PUBLIC Right-of-Ways
- TREES (Parkway): Shall be protected by a fence a minimum of 10' away from any tree.
- RESTORATION: Public sidewalks shall be restored within 3-7 days (weather permitting) from removal or temporarily backfilled with compacted limestone screenings.

EXTERIOR SITE GRADING
- New principal commercial buildings require detailed engineering drawings for storm water drainage.
- Wood framed structures shall have a minimum of 6" of exposed concrete / masonry 4".
- Grades shall conform to the natural slope of the neighborhood.
- Grades shall not cause a nuisance.
- Grades shall not cause ponding.
- Grades shall not create icing or alga on Village property.
- All sumps or Hub drains for receiving clear water waste shall extend two inches above the floor. All indirect clear water waste lines shall be above the floor level. Any floor drain which is level which is level with the floor shall discharge to a sanitary waste drain.

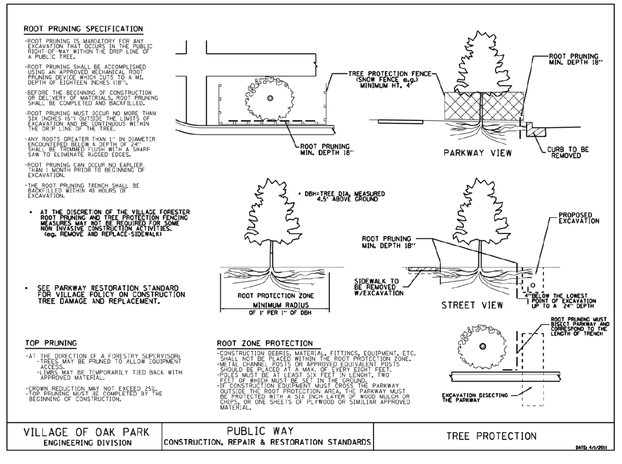

Disclaimer: **This guideline is not all inclusive of the related codes and laws that pertain to this project. Please refer to the actual code book for details. The permit process is a check and balance system that normally involves a designer, plans examiner, contractor, and inspector to ensure the best quality and safest construction possible. As much as the mentioned professionals attempt to achieve full code compliance every effort has been made to identify all code deficiencies, however, failure to identify a code deficiency during plan review and inspection does not alleviate any obligation to comply with all applicable code provisions.**

SIDEWALK VAULT ALTERATIONS

1144 W LAKE ST
OAK PARK, IL 60301

ALTERATIONS TO EXISTING BASEMENT WITHIN AN EXISTING MIXED-USE 5-STORY BUILDING TO INFILL EXISTING SIDEWALK VAULT
TYPE I-B CONSTRUCTION - FULLY SPRINKLERED
GROUP M/A-2/B OCCUPANCY

7. The designer shall indicate if the proposed work can possibly affect the safety of the walking public during the construction process and if so, the designer shall provide mitigation methods to avoid such safety issues. If there are no such hazards the designer shall clearly indicated on the drawings that the passing public is not at risk to injury. (Section 107.2.1 and Chapter 33)

Response: Site safety to be provided by contractor as required.

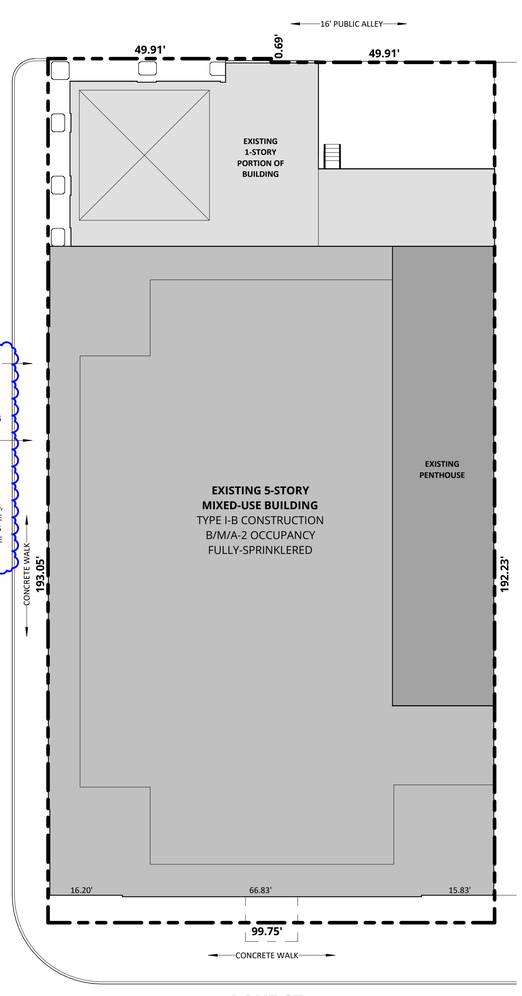

TM 08/22/2025

NOTE: ALL SIDEWALK IMPACTED BY THE VAULT WORK SHALL BE RESTORED TEMPORARILY WITH CONCRETE PATCHING

NOTE: OBTAIN IDOT PERMITS AS REQUIRED AND PROVIDE SIDEWALK CLOSURES IN ACCORDANCE WITH IDOT REQUIREMENTS, SEE A-2. COORDINATE ANY IMPACTS TO BUS STOP WITH CTA, PACE AND THE VILLAGE OF OAK PARK.

1 **SITE PLAN - FOR REFERENCE**
1/16" = 1'-0"

0' 8' 16' 32'

TM 08/22/2025

PROJECT SCOPE

THE SCOPE FOR THIS PROJECT INCLUDES LANDLORD WORK THAT INVOLVES CONSTRUCTION OF A NEW CONCRETE RETAINING WALL AND INFILLING AN EXISTING SIDEWALK VAULT. EXISTING PLUMBING SYSTEMS WILL BE REMOVED AND RELOCATED TO ACCOMMODATE THE INFILLING OF THE VAULT. ALL OF THE WORK INCLUDED IN THIS SCOPE WILL BE CONDUCTED IN A SINGLE PHASE.

NOTE: NO NEW ELECTRICAL, FUEL GAS, ACCESSIBILITY, ENERGY CONSERVATION, FIRE PROTECTION, OR MECHANICAL WORK IS PROPOSED IN THIS SCOPE OF WORK.

ABBREVIATIONS

A/C	AIR CONDITIONING
AFF	ABOVE FINISHED FLOOR
BD	BOARD
BLD	BUILDING
CPT	CARPET
CLG	CEILING
CJ	CONTROL JOINT
CMU	CONCRETE MASONRY UNIT
CONC	CONCRETE
CONT	CONTINUOUS
CO	CLEAN OUT
CW	COLD WATER
CT	CERAMIC TILE
DF	DRINKING FOUNTAIN
DIA	DIAMETER
DIM	DIMENSION
DN	DOWN
DS	DOWNSPOUT
DET	DETAIL
DWG	DRAWING
EA	EACH
EQ	EQUAL
EX OR EXIST	EXISTING
EXT	EXTERIOR
FEC	FIRE EXTINGUISHER CABINET
FHC	FIRE HOSE CABINET
FLR	FLOOR
FD	FLOOR DRAIN
GALV	GALVANIZED
GA	GAUGE
GB	GYPSUM BOARD
HDWR	HARDWARE
H OR HT	HEIGHT
HM	HOLLOW METAL
HW	HOT WATER
MFR	MANUFACTURER
MO	MASONRY OPENING
MTL	METAL
NIC	NOT IN CONTRACT
NTS	NOT TO SCALE
OC	ON CENTER
PT	PAINT
PLAM	PLASTIC LAMINATE
PL	PLATE
R OR RAD	RADIUS
RO	ROUGH OPENING
SHT	SHEET
SIM	SIMILAR
STD	STANDARD
T & G	TONGUE AND GROOVE
T/	TOP
TRANS	TRANSPARENT
TYP	TYPICAL
UNO OR UON	UNLESS NOTED OTHERWISE
VIF	VERIFY IN FIELD
W	WIDTH
WWF	WELDED WIRE FABRIC

PROJECT DIRECTORY

OWNER
1144 LAKE STREET, LLC
415 N LASALLE ST
CHICAGO, IL 60654

ARCHITECT
THOMAS MONTGOMERY ARCHITECT
1701 W 19TH ST
CHICAGO, IL 60608

CONTACT: THOMAS MONTGOMERY
(773) 999-9842
tom@tcmontgomery.com

STRUCTURAL ENGINEER
KIBLER-AE

CONTACT: (773) 344-9181
info@kibler-ae.com

MEP/FP ENGINEER
ALLEN + SHARIFF
625 W ADAMS ST 19TH FL
CHICAGO IL 606061

CONTACT: (312) 320-3668

AREA OF WORK

BASEMENT:	20,110 SF	EXISTING
	1,350 SF	RENOVATED
FIRST FLOOR:	17,050 SF	EXISTING
SECOND FLOOR	14,430 SF	EXISTING
THIRD FLOOR	14,430 SF	EXISTING
FOURTH FLOOR	14,430 SF	EXISTING
FIFTH FLOOR	12,930 SF	EXISTING
PENTHOUSE	2,327 SF	EXISTING
UPPER PENTHOUSE	2,327 SF	EXISTING
TOTAL:	**98,034 SF**	**EXISTING**
	1,350 SF	**RENOVATED**
	LEVEL 2 ALTERATIONS	

SYMBOLS

ROOM NAME 101	ROOM REFERENCE
1 A8.6 SIM	SECTION REFERENCE
1 A8.6 SIM	EXTERIOR ELEVATION
1 4 A-7.1 2 3	INTERIOR ELEVATION
1 A-0	DETAIL / ENLARGED PLAN
Name Elevation	ELEVATION MARK
1 View Name 1/8" = 1'-0"	VIEW TITLE AND NUMBER
1	REVISION CLOUD
X'-X"	DIMENSION
℄	CENTERLINE
#.# #.#	COLUMN GRID LINE

LOCATION MAP

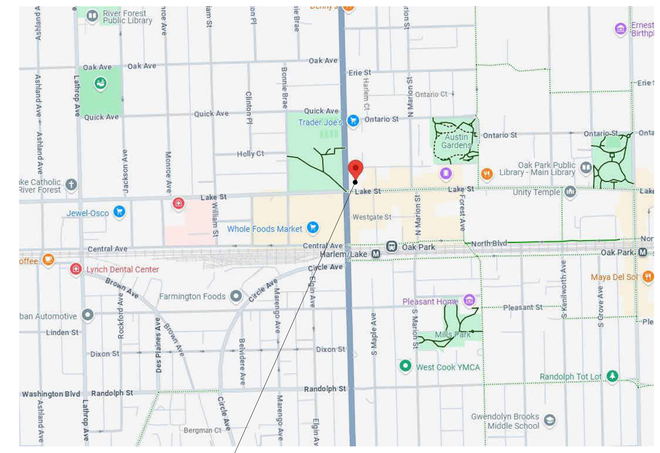

SITE LOCATION

DRAWING INDEX

SHEET NO.	SHEET TITLE	ISSUED FOR PERMIT	PERMIT REVISION 1		
A-0	COVER SHEET	•	•		
A-1	BASEMENT PLAN	•	•		
A-2	IDOT DETAILS - FOR REFERENCE		•		
S000	GENERAL NOTES & TYPICAL DETAILS	•	•		
S100	BASEMENT FRAMING PLAN	•	•		
S101	FIRST FLOOR FRAMING PLAN	•	•		
S200	SECTIONS AND DETAILS	•	•		
E0.1	ELECTRICAL DATA SHEET		•		
E0.2	ELECTRICAL SPECIFICATIONS		•		
E0.3	ELECTRICAL SPECIFICATIONS		•		
E1,1	BASEMENT ELECTRICAL DEMOLITION PLAN		•		
E2.1	ENLARGED BASEMENT ELECTRICAL DEMOLITION PLAN		•		
E3.1	OVERALL BASEMENT ELECTRICAL PLAN		•		
E4.1	ENLARGED BASEMENT ELECTRICAL PLAN		•		
E5.1	ELECTRICAL DETAILS		•		
P0.1	PLUMBING DATA SHEET	•	•		
P0.2	PLUMBING SPECIFICATIONS	•	•		
P1.1	BASEMENT PLUMBING DEMOLITION PLAN	•	•		
P2.1	ENLARGED BASEMENT PLUMBING DEMOLITION PLAN	•	•		
P3.1	OVERALL BASEMENT PLUMBING PLAN	•	•		
P4.1	ENLARGED BASEMENT PLUMBING PLAN	•	•		
P5.1	PLUMBING DETAILS	•	•		
P6.1	PLUMBING SCHEDULES	•	•		

LICENSED ARCHITECT OF RECORD STATEMENT

I HEREBY CERTIFY THAT THESE PLANS HAVE BEEN PREPARED UNDER MY DIRECTION, AND TO THE BEST OF MY KNOWLEDGE AND BELIEFS CONFORM TO THE VILLAGE OF OAK PARK BUILDING CODES AND ORDINANCES.

SIGNED:

ILLINOIS LICENSE NUMBER: 001.022640

DATE: 08/22/2025

LICENSED ARCHITECT
THOMAS CLINTON MONTGOMERY
001.022640
STATE OF ILLINOIS

AFFIX PROFESSIONAL SEAL HERE

THE DRAWINGS COMPLY WITH THE FOLLOWING CODES:

- **OAK PARK ZONING ORDINANCE**
- **2021 INTERNATIONAL BUILDING CODE W/AMENDMENTS**
- **2021 INTERNATIONAL EXISTING BUILDING CODE (IEBC**
- **2020 NATIONAL ELECTRICAL CODE (NEC) W/AMENDMENTS**
- **2021 INTERNATIONAL FIRE CODE (IFC) W/AMENDMENTS**
- **2021 ILLINOIS ENERGY CONSERVATION CODE (IECC)**
- **2021 INTERNATIONAL MECHANICAL CODE (IMC) W/ AMENDMENTS**
- **2021 INTERNATIONAL FUEL GAS CODE (IFGC)**
- **2018 ILLINOIS ACCESSIBILITY CODE (IAC)**
- **2017 ICC A117.1**
- **2014 ILLINOIS PLUMBING CODE (IPC)**

VILLAGE OF OAK PARK
CONSTRUCTION DOCUMENT(S)
REVIEWED FOR COMPLIANCE
KEEP A PRINTED APPROVED COPY OF THE PLANS ON SITE AT ALL TIMES FOR CONTRACTORS AND INSPECTORS

LICENSED ARCHITECT
THOMAS CLINTON MONTGOMERY
001.022640
STATE OF ILLINOIS

08/22/2025

ILLINOIS LICENSE NO: 001.022640
EXPIRATION: 11/30/2026

1144 Lake Street, LLC

SIDEWALK VAULT ALTERATIONS

1144 W LAKE ST
OAK PARK, IL 60301

NO.	DESCRIPTION	DATE
1	PERMIT REVISION 1	08/22/2025
1	ISSUED FOR PERMIT	07/16/2025

THOMAS MONTGOMERY **ARCHITECT**
www.tcmontgomery.com

1701 W 19TH ST
CHICAGO IL 60608
773.999.9842

tom@tcmontgomery.com

JOB NO.: 25.068

COPYRIGHT **2025**: THOMAS MONTGOMERY ARCHITECT, EXPRESSLY RESERVES ITS COMMON LAW COPYRIGHT AND OTHER PROPERTY RIGHTS IN THESE PLANS. THESE PLANS ARE NOT TO BE REPRODUCED, CHANGED OR COPIED IN ANY FORM OR MANNER WHATSOEVER, NOR ARE THEY TO BE ASSIGNED TO ANY THIRD PARTY, WITHOUT FIRST OBTAINING THE EXPRESSED WRITTEN PERMISSION AND CONSENT OF THOMAS MONTGOMERY.

THESE DRAWINGS MAY HAVE BEEN REPRODUCED AT A SIZE DIFFERENTLY THAN ORIGINALLY DRAWN. OWNER AND ARCHITECT ASSUME NO RESPONSIBILITY FOR USE OF INCORRECT SCALE.

SCALE: As indicated

TITLE: **COVER SHEET**

SHEET: **A-0**

8/27/2025 4:55:15 PM

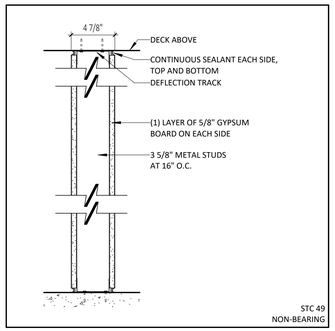

A TYPE A - NON-RATED WALL
1 1/2" = 1'-0"

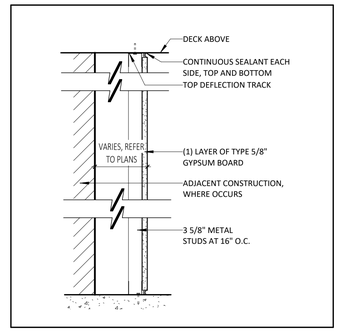

B TYPE B - NON-RATED FURRING
1 1/2" = 1'-0"

FLOOR PLAN LEGEND

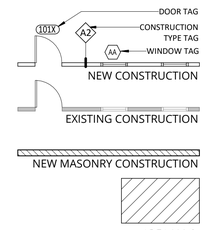

SHEET NOTES

1. DO NOT SCALE DRAWINGS, WRITTEN DIMENSIONS GOVERN.
2. IN CASE OF ANY DISCREPANCY WITHIN THE DRAWINGS, OR ANY DISCREPANCY BETWEEN THE DRAWINGS AND SITE CONDITIONS, NOTIFY ARCHITECT.
3. INDICATED DIMENSIONS ARE TO THE FINISHED FACE OF MATERIALS, U.O.N.
4. ALL DIMENSIONS MARKED "CLEAR", "CLR", OR "HOLD" SHALL BE MAINTAINED AND SHALL ALLOW FOR THICKNESS OF ALL WALL FINISHES, AND SHALL NOT VARY MORE THAN ±1/8" WITHOUT WRITTEN INSTRUCTION FROM ARCHITECT.
5. ALL WORK SHALL BE ERECTED AND INSTALLED PLUMB, LEVEL, SQUARE AND TRUE, AND IN PROPER ALIGNMENT. "ALIGN" MEANS TO ACCURATELY LOCATE FINISHED FACES IN THE SAME PLANE.
6. ANY TYPE OF CONSTRUCTION TESTING, WHETHER STRUCTURAL/SPECIAL INSPECTIONS, HVAC, PLUMBING, FUEL GAS TESTING, OR ANY TESTING NOT MENTIONED, A COPY OF SUCH TESTING SHALL BE PROVIDED TO THE VILLAGE OF OAK PARK FOR THE PERMANENT BUILDING PERMIT FILE.

SAFEGUARDS DURING CONSTRUCTION

1. EACH CONTRACTOR SHALL OBSERVE ALL LOCAL, STATE, AND FEDERAL RULES AND REGULATIONS REGARDING SAFETY AND SHALL PROVIDE ALL NECESSARY EQUIPMENT, SCAFFOLDING, PLANKING, RAILING, SHEETING, ETC. IN ORDER TO SAFEGUARD AND PROTECT THE HEALTH, AND WELL BEING OF ALL THE WORKERS EMPLOYED BY THE CONTRACTOR ON THE CONSTRUCTION SITE. EACH CONTRACTOR SHALL EXPLAIN, INSTRUCT, AND DIRECT ALL WORKERS UNDER HIS JURISDICTION TO OBSERVE ALL THE NECESSARY SAFETY, RULES AND REGULATIONS. EACH CONTRACTOR SHALL MAKE DAILY INSPECTIONS TO VERIFY THAT ALL SAFETY RULES ARE BEING OBSERVED.
2. ALL PROCEDURES REGARDING SAFETY ARE THE RESPONSIBILITY OF THE CONTRACTOR. CONTRACTOR SHALL PROCURE AND PAY FOR THE INSURANCE TO INDEMNIFY AND HOLD HARMLESS THE OWNER, AND THEIR AGENTS, EMPLOYEES AND CONSULTANTS FROM AND AGAINST ALL CLAIMS, DAMAGES, LOSS AND EXPENSES, INCLUDING ATTORNEYS FEES, RESULTING FROM INJURIES, DEATH, SICKNESS, DISEASES, OR ANY OTHER PHYSICAL HANDICAP, ARISING FROM NON-OBSERVANCE OF THE SAFETY RULES AND REGULATIONS.

TM
08/22/2025

1 BASEMENT PLAN - VAULT
1/8" = 1'-0"

VILLAGE OF OAK PARK
CONSTRUCTION DOCUMENT(S)
REVIEWED FOR COMPLIANCE
KEEP A PRINTED APPROVED COPY OF THE PLANS ON SITE AT ALL TIMES FOR CONTRACTORS AND INSPECTORS

LICENSED ARCHITECT
THOMAS CLINTON MONTGOMERY
001.022640
STATE OF ILLINOIS

08/22/2025

ILLINOIS LICENSE NO: 001.022640
EXPIRATION: 11/30/2026

1144 Lake Street, LLC

SIDEWALK VAULT ALTERATIONS

1144 W LAKE ST
OAK PARK, IL 60301

NO.	DESCRIPTION	DATE
2	PERMIT REVISION 1	08/22/2025
1	ISSUED FOR PERMIT	07/16/2025

THOMAS MONTGOMERY
ARCHITECT
www.tcmontgomery.com

1701 W 19TH ST
CHICAGO IL 60608
773.999.9842

tom@tcmontgomery.com

JOB NO.: 25.068

COPYRIGHT **2025**: THOMAS MONTGOMERY ARCHITECT, EXPRESSLY RESERVES ITS COMMON LAW COPYRIGHT AND OTHER PROPERTY RIGHTS IN THESE PLANS. THESE PLANS ARE NOT TO BE REPRODUCED, CHANGED OR COPIED IN ANY FORM OR MANNER WHATSOEVER, NOR ARE THEY TO BE ASSIGNED TO ANY THIRD PARTY, WITHOUT FIRST OBTAINING THE EXPRESSED WRITTEN PERMISSION AND CONSENT OF THOMAS MONTGOMERY.

THESE DRAWINGS MAY HAVE BEEN REPRODUCED AT A SIZE DIFFERENTLY THAN ORIGINALLY DRAWN. OWNER AND ARCHITECT ASSUME NO RESPONSIBILITY FOR USE OF INCORRECT SCALE.

SCALE: As indicated

TITLE: **BASEMENT PLAN**

SHEET: **A-1**

8/27/2025 4:55:19 PM

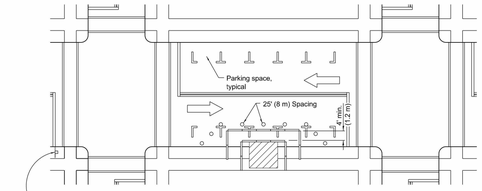

① Omit whenever duplicated by road work traffic control.

① ROAD CONSTRUCTION AHEAD — W20-I103(0)-48 for contract construction projects

Or

① ROAD WORK AHEAD — W20-1(0)-48 for maintenance and utility projects

SIDEWALK DIVERSION

SYMBOLS

- Work area
- Sign on portable or permanent support
- Barricade or drum
- Cone, drum or barricade
- Type III barricade
- Detectable pedestrian channelizing barricade

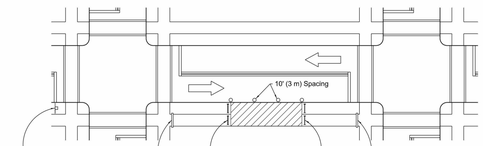

① ROAD CONSTRUCTION AHEAD — W20-I103(0)-48 for contract construction projects

Or

① ROAD WORK AHEAD — W20-1(0)-48 for maintenance and utility projects

SIDEWALK CLOSURE

GENERAL NOTES

This Standard is used where, at any time, pedestrian traffic must be rerouted due to work being performed.

This Standard must be used in conjunction with other Traffic Control & Protection Standards when roadway traffic is affected.

Temporary facilities shall be detectable and accessible.

The temporary pedestrian facilities shall be provided on the same side of the closed facilities whenever possible.

The SIDEWALK CLOSED / USE OTHER SIDE sign shall be placed at the nearest crosswalk or intersection to each end of the closure. Where the closure occurs at a corner, the signs shall be erected on the corners across the street from the closure. The SIDEWALK CLOSED signs shall be used at the ends of the actual closures.

Type III barricades and R11-2-4830 signs shall be positioned as shown in "ROAD CLOSED TO ALL TRAFFIC" detail on Standard 701901.

All dimensions are in inches (millimeters) unless otherwise shown.

Illinois Department of Transportation

APPROVED JANUARY 1, 2016
ENGINEER OF SAFETY ENGINEERING
APPROVED JANUARY 1, 2016
ENGINEER OF DESIGN AND ENVIRONMENT

D-91-C SDW00

DATE	REVISIONS
4-1-16	Omitted orange safety fence from
	standard as this is covered in
	the standard spec.
1-1-12	Added SIDEWALK DIVERSION.
	Modified appearance of plan views.
	Renamed Standard.

SIDEWALK, CORNER OR CROSSWALK CLOSURE

(Sheet 1 of 2)

STANDARD 701801-06

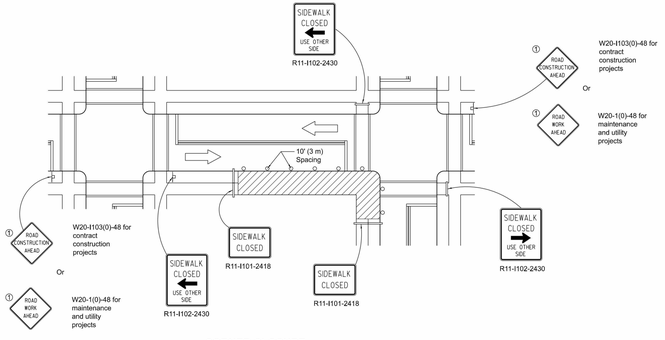

① ROAD CONSTRUCTION AHEAD — W20-I103(0)-48 for contract construction projects

Or

① ROAD WORK AHEAD — W20-1(0)-48 for maintenance and utility projects

① ROAD CONSTRUCTION AHEAD — W20-I103(0)-48 for contract construction projects

Or

① ROAD WORK AHEAD — W20-1(0)-48 for maintenance and utility projects

CORNER CLOSURE

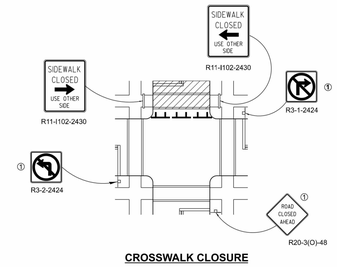

CROSSWALK CLOSURE

Illinois Department of Transportation

APPROVED JANUARY 1, 2016
ENGINEER OF SAFETY ENGINEERING
APPROVED JANUARY 1, 2016
ENGINEER OF DESIGN AND ENVIRONMENT

D-91-C SDW00

SIDEWALK, CORNER OR CROSSWALK CLOSURE

(Sheet 2 of 2)

STANDARD 701801-06

VILLAGE OF OAK PARK
CONSTRUCTION DOCUMENT(S)
REVIEWED FOR COMPLIANCE
KEEP A PRINTED APPROVED COPY OF THE PLANS ON SITE AT ALL TIMES FOR CONTRACTORS AND INSPECTORS
- Signs is required to provide the address, contractor name and emergency contact information.
  - Signs are only valid 11:00 P.M. to 6:00 A.M.
- Construction hours are 7:00 A.M. to 7:00 P.M. unless otherwise stated.
- Activities outside shall not project in the front and in the alley of the site (if applicable).
  - Trees shall be protected in the parkway; do not block sidewalks or alleyway.
- Construction materials and equipment shall be stored on site and not in the parkway.
- Construction fencing shall remain the site and maintained "tight" for the A.S.F. life of the project.
- Respect the neighboring properties, not to trespass on it damage neighboring properties.
  - Maintain all sidewalks, roadways, and alleys in a safe condition.
  - Maintain all guardrails, walkways, ladders and stairs in a safe condition.

Any and all changes and/or deviations to the approved plans shall be proposed in writing, in triplicate, for a complete re-review and re-approval.

LICENSED ARCHITECT
THOMAS CLINTON MONTGOMERY
001.022640
STATE OF ILLINOIS

08/22/2025

ILLINOIS LICENSE NO: 001.022640
EXPIRATION: 11/30/2026

1144 Lake Street, LLC

SIDEWALK VAULT ALTERATIONS

1144 W LAKE ST
OAK PARK, IL 60301

NO.	DESCRIPTION	DATE
1	PERMIT REVISION 1	08/22/2025

THOMAS MONTGOMERY
ARCHITECT
www.tcmontgomery.com

1701 W 19TH ST
CHICAGO IL 60608
773.999.9842

tom@tcmontgomery.com

JOB NO.: 25.068

COPYRIGHT **2025**: THOMAS MONTGOMERY ARCHITECT, EXPRESSLY RESERVES ITS COMMON LAW COPYRIGHT AND OTHER PROPERTY RIGHTS IN THESE PLANS. THESE PLANS ARE NOT TO BE REPRODUCED, CHANGED OR COPIED IN ANY FORM OR MANNER WHATSOEVER, NOR ARE THEY TO BE ASSIGNED TO ANY THIRD PARTY, WITHOUT FIRST OBTAINING THE EXPRESSED WRITTEN PERMISSION AND CONSENT OF THOMAS MONTGOMERY.

THESE DRAWINGS MAY HAVE BEEN REPRODUCED AT A SIZE DIFFERENTLY THAN ORIGINALLY DRAWN. OWNER AND ARCHITECT ASSUME NO RESPONSIBILITY FOR USE OF INCORRECT SCALE.

SCALE:

TITLE: **IDOT DETAILS - FOR REFERENCE**

SHEET: **A-2**

8/27/2025 4:55:36 PM

GENERAL STRUCTURAL NOTES

DESIGN CODES AND STANDARDS

ALLOWABLE STRESSES AND LOADING IN ACCORDANCE INTERNATIONAL BUILDING CODE, 2021.

LIVE LOADS USED IN DESIGN IN LBS. PER SQ. FT. ARE AS FOLLOWS:
SIDEWALKS 250 PSF

FOUNDATION AND SOIL CONDITIONS

SOIL BEARING PRESSURE USED IN DESIGN: 1,500 PSF AT A DEPTH BELOW GRADE AS PER IBC SECTION 1806.

SOIL LATERAL LOADS USED IN DESIGN: AT-REST PRESSURE = 60 PSF/FT.

1 08/22/2025

FLOWABLE FILL FOR BACKFILL OF VAULT SHALL BE LIGHTWEIGHT CELLULAR CONCRETE FILL AND CONFORM TO IDOT GUIDE BRIDGE SPECIAL PROVISION GBSP-87 CLASS I.

FLOWABLE FILL SHALL BE PLACED IN LIFTS TO PREVENT DAMAGE TO RETAINING STRUCTURES BY LATERAL PRESSURES. EACH LIFT SHALL BE ALLOWED TO HARDEN PRIOR TO PLACING THE NEXT LIFT.

FLOOR SLABS AT THE TOP AND BOTTOM OF FOUNDATION WALLS THAT RETAIN FILL SHALL REMAIN IN PLACE TO BRACE AGAINST BACKFILLING PRESSURE.

NO FOUNDATIONS OR FILL SHALL BE PLACED ONTO OR AGAINST SUBGRADES CONTAINING FREE WATER, FROST, OR ICE.

ALL BEARING MATERIAL SHALL BE INSPECTED BY AN INDEPENDENT TESTING AGENCY PRIOR TO CONCRETE PLACEMENT. THE INDEPENDENT TESTING AGENCY SHALL BE SOLE JUDGE AS TO THE SUITABILITY OF THE BEARING MATERIAL. FOOTING ELEVATIONS SHALL BE ADJUSTED AS REQUIRED.

BOTTOM OF ALL EXTERIOR FOOTINGS SHALL BEAR A MINIMUM OF 3'-6" BELOW FINAL GRADE FOR FROST PROTECTION.

CONCRETE AND REINFORCEMENT

PROVIDE CONCRETE MIX DESIGN CONFORMING TO EXPOSURE CLASSES F1, S0, W1, C1 INCLUDING:
MAXIMUM w/cm = 0.55
MINIMUM ULTIMATE COMPRESSIVE STRENGTH AT 28 DAYS = 4000 psi
AIR ENTRAINMENT IN ACCORDANCE WITH ACI 19.3.2.1

ALL CONCRETE WORK SHALL BE IN ACCORDANCE WITH THE "AMERICAN CONCRETE INSTITUTE BUILDING CODE" (ACI 318) AND WITH "SPECIFICATIONS FOR STRUCTURAL CONCRETE FOR BUILDINGS" (ACI 301), 2019 EDITION. 1 08/22/2025

UNLESS OTHERWISE SHOWN OR NOTED ALL CONCRETE WORK SHALL CONTAIN MINIMUM REINFORCEMENT AS REQUIRED BY ACI 318.

REINFORCEMENT GRADES:
BAR REINFORCEMENT SHALL CONFORM TO ASTM A 615, GRADE 60.
WELDED WIRE FABRIC SHALL CONFORM TO ASTM A 1064.

DETAIL BAR REINFORCEMENT ACCORDING TO ACI PRC 315-18 - GUIDE TO PRESENTING REINFORCING STEEL DESIGN DETAILS. 1 08/22/2025

DETAIL WELDED WIRE FABRIC IN ACCORDANCE WITH THE WELDED WIRE FABRIC MANUAL OF STANDARD PRACTICE, 2021 EDITION.

PROVIDE ALL ACCESSORIES NECESSARY TO SUPPORT REINFORCEMENT AT POSITIONS SHOWN ON THE PLANS AND DETAILS.

PLASTIC COATED ACCESSORIES SHALL BE USED IN ALL EXPOSED CONCRETE WORK.

MINIMUM CONCRETE COVER, UNLESS NOTED OTHERWISE:

UNFORMED SURFACES IN CONTACT WITH THE GROUND	3"
FORMED SURFACES EXPOSED TO EARTH OR WEATHER:	
#6 BARS AND LARGER	2"
#5 BARS AND SMALLER	1 1/2"
FORMED SURFACES NOT EXPOSED TO EARTH OR WEATHER:	
SLABS, WALLS, JOISTS	
#14 AND #18 BARS	1 1/2"
#11 BARS AND SMALLER	3/4"
BEAMS, GIRDERS, COLUMNS	1 1/2"

NO CHLORIDES SHALL BE ALLOWED IN THE CONCRETE MIX.

CONTRACTOR SHALL PROVIDE A DUPLICATE COPY OF ALL READY MIX CONCRETE DELIVERY TICKETS TO THE ARCHITECT/OWNER.

CONCRETE MEMBERS SHALL NOT BE SLEEVED, BOXED-OUT OR HAVE THEIR REINFORCING INTERRUPTED EXCEPT AS SHOWN ON THE STRUCTURAL DRAWINGS OR APPROVED BY STRUCTURAL ENGINEER.

NO ALUMINUM OF ANY TYPE SHALL BE ALLOWED IN THE CONCRETE WORK, UNLESS COATED TO PREVENT ALUMINUM-CONCRETE REACTION. THIS INCLUDES PUMPING THROUGH ALUMINUM PIPE.

CONSTRUCTION JOINTS SHALL BE PROVIDED AS SHOWN ON DRAWINGS AND DETAILS. NO JOINT SHALL BE OMITTED OR ADDED WITHOUT THE APPROVAL OF THE ENGINEER. PROVIDE SHEAR KEYS AT ALL FOUNDATION WALL CONSTRUCTION JOINTS. REINFORCING SHALL CONTINUE UNINTERRUPTED THROUGH JOINTS.

PROVIDE VERTICAL CONSTRUCTION JOINTS IN CONCRETE WALLS AT A MAXIMUM OF 35'-0" INTERVAL. ALL JOINTS BELOW GRADE SHALL BE PROVIDED WITH A BENTONITE WATERSTOP.

WATERSTOPS SHALL BE A STRIP-APPLIED, COMPOSITE BENTONITE AND RUBBER WATERSTOP. STORE AND INSTALL IN ACCORDANCE WITH THE MANUFACTURER'S RECOMMENDATIONS.

HORIZONTAL CONSTRUCTION JOINTS SHALL NOT BE PERMITTED EXCEPT AS SHOWN ON THE STRUCTURAL DRAWINGS.

THE GENERAL CONTRACTOR SHALL SUBMIT DETAILED DRAWINGS SHOWING THE LOCATIONS AND DETAILING OF ALL CONSTRUCTION JOINTS, CURBS, SLAB DEPRESSIONS, ETC.

THE GENERAL CONTRACTOR SHALL SUBMIT DETAILED SHOP DRAWINGS SHOWING REINFORCING DETAILS, INCLUDING STEEL SIZES, LAPS, SPACING AND PLACEMENT, AND THE LOCATIONS AND DETAILING OF ALL CONSTRUCTION JOINTS, CURBS, SLAB DEPRESSIONS, ETC. FOR REVIEW AND APPROVAL BY THE ARCHITECT AND STRUCTURAL ENGINEER PRIOR TO FABRICATION.

ALL EMBEDMENT LENGTHS AND LAPS SHALL BE AS REQUIRED BY ACI 318. UNLESS OTHERWISE NOTED, MINIMUM LAP TO BE 36 BAR DIAMETERS.

CORNER BARS SHALL BE PROVIDED AT ALL WALL AND GRADE BEAM CORNERS AND INTERSECTIONS EQUAL TO THE HORIZONTAL WALL AND GRADE BEAM REINFORCEMENT.

UNLESS OTHERWISE SHOWN OR NOTED PLACE 2-#5 EACH FACE WITH 2'-0" PROJECTION AROUND ALL OPENINGS IN CONCRETE.

WELDING OF REINFORCING BARS SHALL NOT BE PERMITTED.

ALL REINFORCING SHALL BE BENT COLD, DO NOT APPLY HEAT.

SHORING AND BRACING

INDIVIDUAL STRUCTURAL COMPONENTS ARE DESIGNED TO SUPPORT LOADS IN THEIR FINAL POSITION AS PART OF THE TOTAL COMPLETED STRUCTURE. PROVIDE TEMPORARY SHORING, GUYING AND BRACING AS REQUIRED UNTIL ALL CONSTRUCTION AFFECTING LOAD CARRYING MEMBERS AND LATERAL STABILITY IS COMPLETED.

CONTRACTOR SHALL BE SOLELY RESPONSIBLE FOR THE STABILITY OF THE STRUCTURE, ITS PARTS AND JOB SITE SAFETY BY THE USE OF GUYING, BRACING, SHORING, BARRICADES, SAFETY RAILINGS AND DEVICES DURING THE ENTIRE PERIOD OF CONSTRUCTION.

THE CONTRACTOR IS FULLY RESPONSIBLE FOR PROVIDING ALL TEMPORARY SHORING AND BRACING OF EXISTING STRUCTURAL ELEMENTS DURING CONSTRUCTION. ALL SHORING MUST BE ADEQUATE TO SUPPORT ALL STRUCTURAL LOADING DURING MODIFICATION OF THE EXISTING BUILDING AND ERECTION OF THE NEW STRUCTURAL SUPPORT SYSTEM. TEMPORARY SHORING MUST REMAIN IN PLACE UNTIL ALL NEW STRUCTURAL MEMBERS SUPPORTING SHORED ELEMENTS ARE IN PLACE, ALL NEW CONNECTIONS ARE IN PLACE, AND ALL CONCRETE DECK HAS ATTAINED DESIGN STRENGTH.

ALL SHORING, MEANS AND METHODS ARE SOLELY THE RESPONSIBILITY OF THE CONTRACTOR. ALL SHORING SHALL BE DESIGNED, SIGNED AND SEALED BY A STRUCTURAL ENGINEER LICENSED IN THE STATE OF ILLINOIS.

GENERAL NOTES

ALL DIMENSIONS ON STRUCTURAL DRAWINGS TO BE CHECKED AGAINST EXISTING CONDITIONS IN THE FIELD AND ARCHITECTURAL DRAWINGS BY THE GENERAL CONTRACTOR; ANY DISCREPANCIES ARE TO BE REPORTED TO THE ARCHITECT AND ENGINEER IMMEDIATELY.

UNLESS OTHERWISE NOTED, ALL DETAILS, SECTIONS AND NOTES ON THE DRAWINGS ARE INTENDED TO BE TYPICAL FOR SIMILAR SITUATIONS ELSEWHERE.

THESE DRAWINGS ARE NOT TO BE REPRODUCED FOR THE PURPOSE OF USING THEM AS SHOP DRAWINGS.

ARCHITECT'S/OWNER'S APPROVAL MUST BE SECURED FOR ALL SUBSTITUTIONS.

1 08/22/2025

THE INFORMATION CONTAINED ON THE STRUCTURAL DRAWINGS IS IN ITSELF INCOMPLETE AND VOID UNLESS USED IN CONJUNCTION WITH ALL THE CONTRACT DRAWINGS, TRADE PRACTICES, OR APPLICABLE STANDARDS, CODES, ETC., INCORPORATED THEREIN BY REFERENCE WHICH THE CONTRACTOR CERTIFIES KNOWLEDGE OF BY SIGNING THE CONTRACT.

STRUCTURAL ENGINEER'S REVIEW OF SHOP DRAWINGS IS ONLY FOR CONFORMANCE WITH THE DESIGN CONCEPT. CONSTRUCTION SHALL NOT BEGIN WITHOUT SAID REVIEW AND ONLY SHOP DRAWINGS STAMPED BY THE ARCHITECT AND STRUCTURAL ENGINEER SHALL BE ALLOWED AT THE JOB SITE.

CONTRACTOR IS TO ASSUME FULL RESPONSIBILITY, UNRELIEVED BY REVIEW OF SHOP DRAWINGS OR PERIODIC OBSERVATION OF CONSTRUCTION, FOR COMPLIANCE WITH THE CONTRACT DOCUMENTS, FOR DIMENSIONS TO BE CONFIRMED AND CORRELATED ON THE JOB SITE AND BETWEEN INDIVIDUAL DRAWINGS OR SETS OF DRAWINGS FOR FABRICATION PROCESSES AND CONSTRUCTION TECHNIQUES (INCLUDING EXCAVATION, SHORING, SCAFFOLDING, BRACING, ERECTION, FORMWORK, ETC.), FOR COORDINATION OF THE VARIOUS TRADES, AND FOR SAFE CONDITIONS ON THE JOB SITE. VARIATIONS IN FIELD CONDITIONS RELATIVE TO THE CONTRACT DOCUMENTS SHALL BE REPORTED TO THE ARCHITECT/OWNER. WORK SHALL NOT PROGRESS UNTIL WRITTEN PERMISSION FROM THE ARCHITECT/OWNER IS OBTAINED.

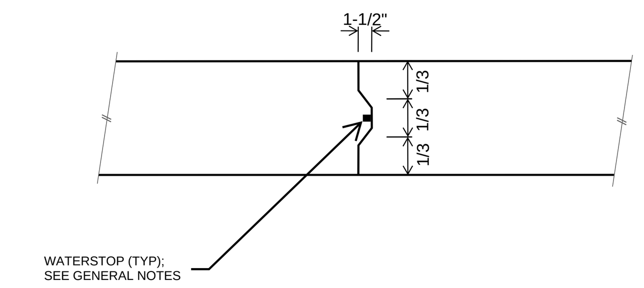

STANDARD SLAB/WALL KEY DETAIL

SCALE: NO SCALE

VILLAGE OF OAK PARK
CONSTRUCTION DOCUMENT(S)
REVIEWED FOR COMPLIANCE
These document(s) has been reviewed for conformance with applicable provisions of the codes and ordinances of the Village of Oak Park. The permit process is a check and balance system that normally involves a licensed designer, plans examiner, contractor, and inspector to ensure the best quality and safest construction possible. As much as the mentioned professionals attempt to achieve full code compliance every effort has been made to identify all code deficiencies however; failure to identify a code deficiency during plan review and inspection does not alleviate any obligation to comply with all applicable code provisions. Ultimately the owner and contractor are responsible for full code compliance.
KEEP A PRINTED APPROVED COPY OF THE PLANS ON SITE AT ALL TIMES FOR CONTRACTORS AND INSPECTORS
- Signage is required to provide the address, contractor name and emergency contact information
- Before you dig call J.U.L.I.E @ 811
- Construction hours are 7:00AM through 6:00PM all seven days a week
- Address numbers shall be posted in the front and in the alley of the site (if applicable)
- Trees shall be protected in the parkways; do not block sidewalks or alleyways
- Portable toilets shall be properly maintained a minimum of 10' from the lot line
- Construction fencing shall secure the site and materials(6' high for res. & 8' high for comm. sites)
- Respect the neighboring properties; do not trespass on or damage neighboring properties
- Keep the site clean, safe, organized and free from debris.
- Maintain all guardrails, walkways, ladders and stairs in a safe condition

Any and all changes and/or deviations to the approved plans shall be proposed in writing, in triplicate, for a complete re-review and re-approval.

--

SIDEWALK VAULT ALTERATIONS

1144 W LAKE ST
OAK PARK, IL 60301

NO.	DESCRIPTION	DATE
1	PERMIT REVISION 1	08/22/2025
1	ISSUED FOR PERMIT	07/16/2025

JOB NO.: 25.068

1 08/22/2025

KIBLER-AE PC
Structural Engineering

4938 N. Wolcott Ave.
Chicago, IL 60640

tel 773-344-9181

LICENSED STRUCTURAL ENGINEER
STEPHEN JOHN KIBLER
081-005715
STATE OF ILLINOIS

STRUCTURAL ENGINEER LICENCE No. 081.005715
EXPIRES: 11-30-2026
ILLINOIS DESIGN FIRM LICENCE No. 184.009122-0007
EXPIRES: 4-30-2027

SCALE:

GENERAL NOTES & TYPICAL DETAILS

SHEET: **S000**

7/24/2025 1:06:23 PM

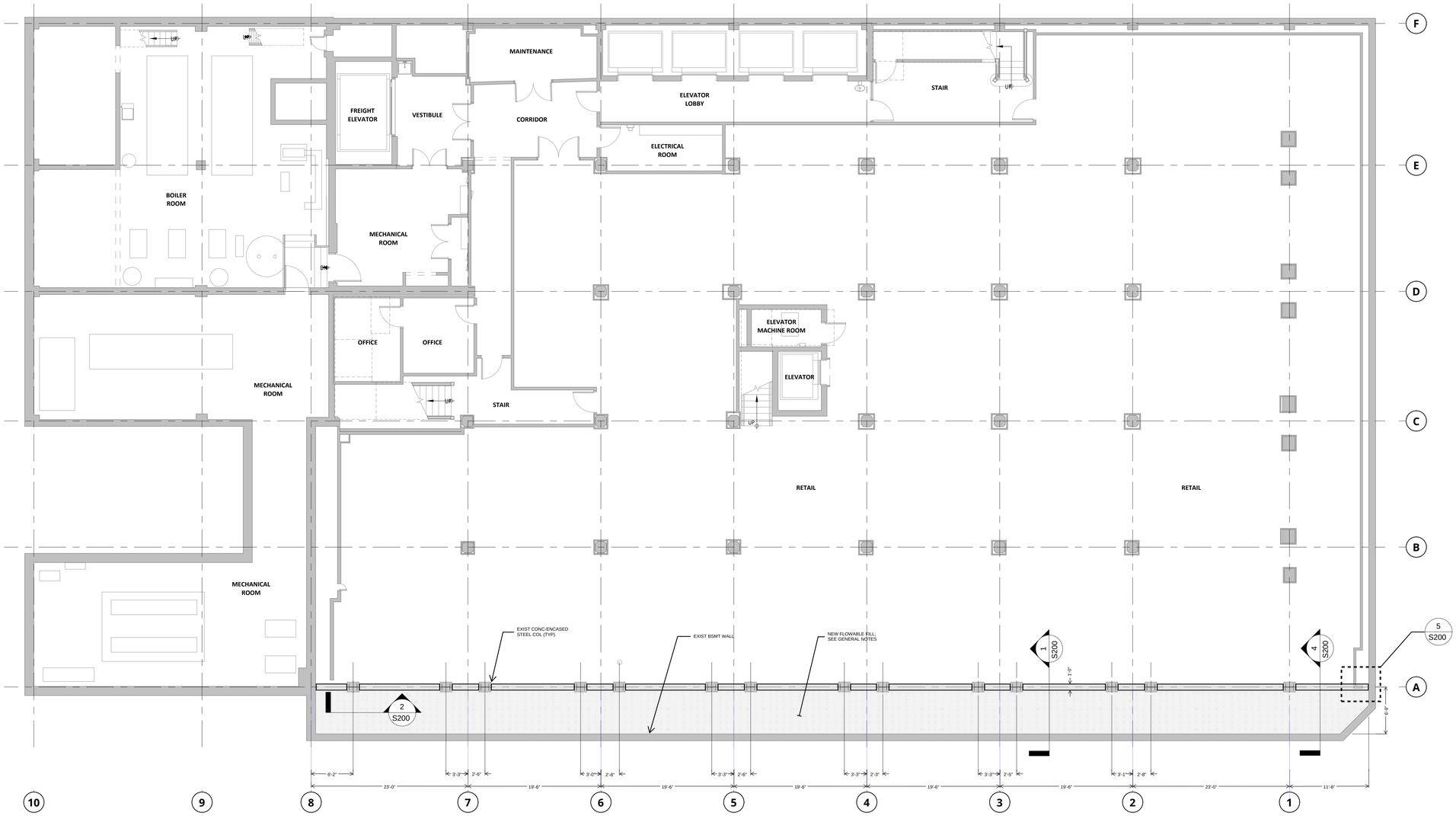

N

BASEMENT FRAMING PLAN

SCALE 1/8" = 1'-0"

0' 4' 8' 16'

08/22/2025

NOTES:

1. VERIFY ALL DIMENSIONS IN FIELD PRIOR TO CONSTRUCTION.
2. BASEMENT AND FIRST FLOOR SLABS TO REMAIN IN PLACE DURING CONSTRUCTION EXCEPT AS NOTED.

VILLAGE OF OAK PARK

CONSTRUCTION DOCUMENT(S)

REVIEWED FOR COMPLIANCE

This construction plan review is based on the information provided and does not imply approval of any omission or violation of any law or ordinance. Review for compliance with the Village's Zoning Ordinance is based on information provided by the applicant. Review for compliance with other codes and ordinances is based on information provided by the applicant and on the assumption that the applicant has complied with the requirements of the Village's Building Code and other ordinances. Review and approval of this document does not imply approval of any violation of any law or ordinance.

KEEP A PRINTED APPROVED COPY OF THE PLANS ON SITE AT ALL TIMES FOR CONTRACTORS AND INSPECTORS

- Signage is required to provide the address, contractor name and emergency contact information
  - Before you dig call (312) 27 B 311
- Construction hours are 7:00 AM to 7:00 PM unless otherwise stated in permit.
- Activities outdoors shall not operate in the front and in the alley of the site (if applicable)
  - These shall be protected in the packaging, do not block sidewalks or alleyways
- Construction Dumpsters shall be placed on the property and not in the alley or on the street
- Construction fencing shall remain the site and maintained legal for max. 6.5' high for secure, sheet
- Respect the neighboring properties, not to trespass or cf damage neighboring properties
  - Protect all trees, shrubs, and other landscaping on the site
  - Maintain all guardrails, railings, ladders and stairs in a safe condition
Any and all changes and/or deviations to the approved plans shall be proposed in writing, in triplicate, for a complete revisions and re-approval.

--

SIDEWALK VAULT ALTERATIONS

1144 W LAKE ST
OAK PARK, IL 60301

NO.	DESCRIPTION	DATE
1	PERMIT REVISION 1	08/22/2025
1	ISSUED FOR PERMIT	07/16/2025

JOB NO.: 25.068

SCALE:

TITLE: **BASEMENT FRAMING PLAN**

SHEET: **S100**

7/24/2025 1:06:23 PM

N

FIRST FLOOR FRAMING PLAN

SCALE 1/8" = 1'-0"

0' 4' 8' 16'

1 08/22/2025

NOTES:

1. VERIFY ALL DIMENSIONS IN FIELD PRIOR TO CONSTRUCTION.
2. BASEMENT AND FIRST FLOOR SLABS TO REMAIN IN PLACE DURING CONSTRUCTION EXCEPT AS NOTED.

VILLAGE OF OAK PARK

CONSTRUCTION DOCUMENT(S)

REVIEWED FOR COMPLIANCE

KEEP A PRINTED APPROVED COPY OF THE PLANS ON SITE AT ALL TIMES FOR CONTRACTORS AND INSPECTORS

SIDEWALK VAULT ALTERATIONS

1144 W LAKE ST
OAK PARK, IL 60301

NO.	DESCRIPTION	DATE
1	PERMIT REVISION 1	08/22/2025
1	ISSUED FOR PERMIT	07/16/2025

JOB NO.: 25.068

SCALE:

TITLE: FIRST FLOOR FRAMING PLAN

SHEET: S101

7/24/2025 1:06:23 PM

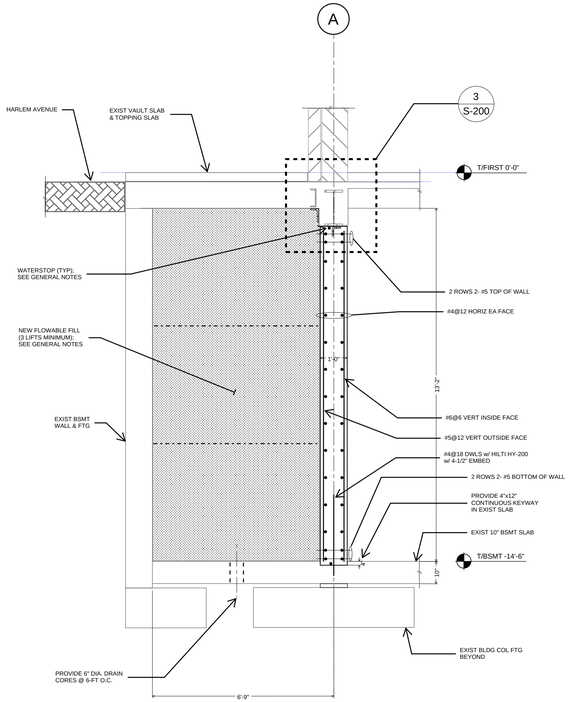

SECTION 1
SCALE 3/8" = 1'-0"

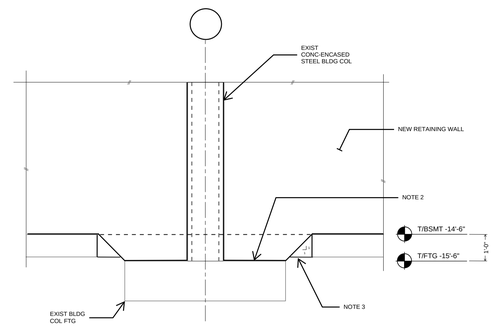

NOTES:

1. FOR INFORMATION NOT SHOWN SEE SECTION 1/S200.
2. SAWCUT EXIST SLAB & EXTEND NEW WALL TO TOP OF FOOTING.
3. PATCH SLAB TO MATCH TOP OF BASEMENT SLAB.

SECTION 2
SCALE 3/8" = 1'-0"

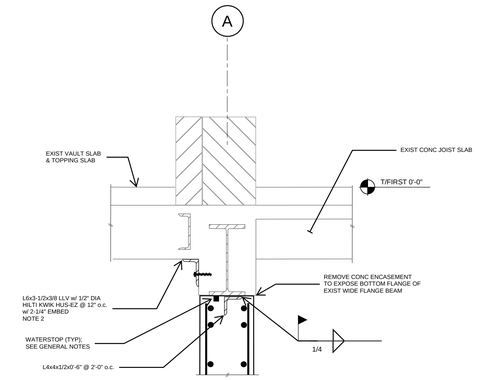

NOTES:

1. FOR INFORMATION NOT SHOWN SEE SECTION 1/S200.
2. SHIM TIGHT TO UNDERSIDE OF SLAB WITH NON-SHRINK GROUT.

DETAIL 3
SCALE 3/4" = 1'-0"

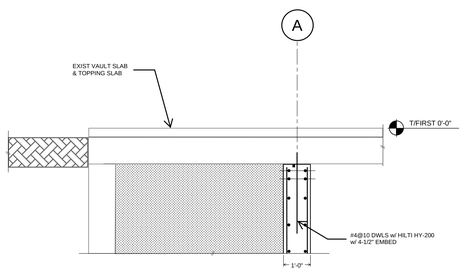

FOR INFORMATION NOT SHOWN SEE SECTION 1/S200.

SECTION 4
SCALE 3/8" = 1'-0"

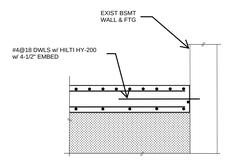

FOR INFORMATION NOT SHOWN SEE SECTION 1/S200.

SECTION 5
SCALE 3/8" = 1'-0"

VILLAGE OF OAK PARK

CONSTRUCTION DOCUMENT(S)

REVIEWED FOR COMPLIANCE

This review is being conducted under the provisions of the Village of Oak Park Municipal Code Chapter 15 and the Illinois Environmental Barriers Act. Review and approval of this document does not imply approval of any violation of these codes or any other ordinance or regulation of the Village of Oak Park or the State of Illinois. Review is based on information provided by the applicant and is subject to verification by inspection upon commencement of work. Work must be stopped if any violations are found to exist. Any and all changes and/or deadlines to the approved plans shall be proposed in writing in triplicate, for a complete re-review and re-approval.

KEEP A PRINTED APPROVED COPY OF THE PLANS
ON SITE AT ALL TIMES FOR CONTRACTORS AND INSPECTORS

- Signage is required to provide the address, contractor name and emergency contact information.
  - Dial-Before-you-dig call 811 or 811 or 811
- Construction hours are limited to 7:00 AM to 7:00 PM unless stated otherwise.
- Address numbers shall be posted on the front and in the alley of the site (if applicable)
- Trees shall be protected in the parkway; do not block sidewalks or alleyway.
- Construction materials shall be contained on the property; do not block the alley or street.
- Construction fencing shall remain the site and maintained legal for max. 6.5' high for secure, sheet
- Respect the neighboring properties; we're trespass on it' damage neighboring properties
  - Protect the trees, shrubs, and grass in the parkway
  - Maintain all guardrails, railings, ladders and stairs in a safe condition
Any and all change and/or deadlines to the approved plans shall be proposed in writing in triplicate, for a complete re-review and re-approval.

--

SIDEWALK VAULT ALTERATIONS

1144 W LAKE ST
OAK PARK, IL 60301

NO.	DESCRIPTION	DATE
1	PERMIT REVISION 1	08/22/2025
1	ISSUED FOR PERMIT	07/16/2025

JOB NO.: 25.068

SCALE:

TITLE: **SECTIONS AND DETAILS**

SHEET: **S200**

7/24/2025 1:09:23 PM

GENERAL ELECTRICAL NOTES:

GENERAL: UNLESS SPECIFICALLY INDICATED OTHERWISE, ALL WORK SHOWN ON THE ELECTRICAL DRAWINGS IS NEW WORK TO BE PROVIDED UNDER THIS CONTRACT.

DEMOLITION: SEE "ELECTRICAL GENERAL DEMOLITION NOTES FOR ADDITIONAL DEMOLITION REQUIREMENTS.

COORDINATION: COORDINATE AND COOPERATE WITH ALL TRADES ON THE PROJECT.

RECORD DRAWINGS: SECURE AN EXTRA SET OF ELECTRICAL DRAWINGS TO BE KEPT ON SITE AND MARK DAILY, THE DRAWINGS IN RED AS THE PROJECT PROGRESSES IN ORDER TO KEEP AN ACCURATE RECORD OF ALL DEVIATIONS BETWEEN THE WORK SHOWN ON THE DRAWINGS AND THE WORK WHICH IS ACTUALLY INSTALLED. THESE MARKED DRAWINGS SHALL REFLECT ANY AND ALL CHANGES AND REVISIONS TO THE ORIGINAL DESIGN WHICH EXISTS IN THE COMPLETED WORK. DELIVER THE MARKED DRAWINGS TO THE ARCHITECT OR ENGINEER AT PROJECT CLOSE-OUT.

TESTS: TEST ALL WIRING FOR CONTINUITY AND GROUNDS BEFORE CONNECTING ANY FIXTURES OR DEVICES. PERFORM INSULATION RESISTANCE TESTS ON ALL WIRING #8 OR LARGER TO ENSURE THAT ALL PORTIONS ARE FREE FROM SHORT-CIRCUITS AND GROUNDS.

INSPECTIONS: ARRANGE ALL NECESSARY INSPECTIONS. DELIVER ALL REQUIRED INSPECTION CERTIFICATES TO THE OWNER.

GROUNDING: PROVIDE GROUNDING IN ACCORDANCE WITH THE NEC FOR THE ELECTRICAL SYSTEM, INCLUDING EQUIPMENT FRAMES CONDUITS, SWITCHES, CONTROLLERS, WIRE-WAYS, NEUTRAL CONDUCTORS AND OTHER EQUIPMENT. PROVIDE A GROUNDING CONDUCTOR IN ALL CIRCUITS.

LABELS: PROVIDE LABELS FOR ALL PANELBOARDS, CABINETS, SAFETY SWITCHES, MOTOR-DISCONNECT SWITCHES, AND MOTOR CONTROLLERS. LABELS SHALL BE MACHINE ENGRAVED, LAMINATED PLASTIC.

J-BOX LABELING: LABEL ALL JUNCTION BOXES WITH PERMANENT MARKER IDENTIFYING CIRCUIT NUMBER AND PANELBOARD OF CIRCUITS WITHIN.

PANEL DIRECTORY: PROVIDE TYPEWRITTEN PANELBOARD DIRECTORY CARD IN EACH PANELBOARD, INCLUDING EXISTING PANELBOARDS MODIFIED FOR THIS PROJECT, WITH CIRCUIT LOAD INFORMATION AND ROOM NUMBER CLEARLY IDENTIFIED. USE ACTUAL ROOM NUMBERS IN THE BUILDING, NOT THE ROOM NUMBERS SHOWN ON THE CONTRACT DRAWINGS, AS THEY ARE OFTEN DIFFERENT.

CONNECTION DETAILS: SECURE APPROVED SHOP DRAWINGS SHOWING WIRING DIAGRAMS, ROUGH-IN AND HOOK UP DETAILS FOR EQUIPMENT WHICH MUST BE CONNECTED ELECTRICALLY.

EQUIPMENT DETAILS: MECHANICAL EQUIPMENT WILL BE FURNISHED AND INSTALLED BY THE MECHANICAL CONTRACTOR. THE LOCATIONS SHOWN ON THE ELECTRICAL DRAWINGS ARE APPROXIMATE. COORDINATE WITH THE MECHANICAL CONTRACTOR TO DETERMINE THE EXACT LOCATION OF EACH PIECE OF EQUIPMENT AND DETERMINE THE EXACT ROUGH-IN AND CONNECTION REQUIREMENTS.

STARTER MOUNTING: WHERE AN INDIVIDUALLY MOUNTED SAFETY SWITCH, STARTER OR CIRCUIT BREAKER IS SHOWN ADJACENT TO ITS RESPECTIVE LOAD AND NOT MOUNTED ON A WALL, PROVIDE ALL SUPPORTS, BRACKETS, ANCHORING, ETC. NECESSARY TO PROPERLY SUPPORT THE DEVICE.

MATERIAL COORDINATION: VERIFY CEILING AND WALL CONSTRUCTION AND MATERIAL PRIOR TO ORDERING LIGHT FIXTURES OR OTHER DEVICES TO ENSURE PROPER FIXTURES OR DEVICES ARE FURNISHED TO MATCH CONSTRUCTION.

MOUNTING HEIGHTS: MOUNTING HEIGHTS INDICATED ARE FROM THE FINISHED FLOOR TO THE CENTERLINE OF THE WIRING DEVICE UNLESS OTHERWISE NOTED. MOUNTING HEIGHTS OF LIGHTING FIXTURES AND FIRE ALARM DEVICES ARE TO THE BOTTOM OF THE FIXTURE OR DEVICE UNLESS OTHERWISE NOTED.

DEVICE LOCATIONS: COORDINATE LOCATIONS OF SWITCHES, RECEPTACLES, AND TELE/DATA OUTLETS WITH OTHER WALL MOUNTED DEVICES SUCH AS THERMOSTATS AND CONTROL STATIONS. DO NOT MOUNT WIRING DEVICES BACK TO BACK.

DEVICE COORDINATION: THOROUGHLY REVIEW AND COORDINATE ALL CASEWORK, DOOR SWINGS, AND CABINET DRAWINGS AND ARCHITECTURAL ELEVATIONS WITH DEVICE LOCATIONS PRIOR TO ROUGH-IN OF OUTLET BOXES.

BARRIERS: WHERE A MULTIPLE GANG BOX HAS CIRCUITS OF DIFFERENT VOLTAGES OR SYSTEMS WHICH ARE REQUIRED TO BE SEPARATED, PROVIDE THE CODE-REQUIRED SEPARATION, USING A FULL HEIGHT AND DEPTH BARRIER PLATE.

FIRE PROOFING: FOR ANY WALL OR FLOOR PENETRATIONS THROUGH FIRE RATED STRUCTURES, PROVIDE FIRE-PROOFING TO SEAL ALL THE PENETRATIONS AFTER THE CONDUIT HAS BEEN INSTALLED. FIRE PROOFING FOR PENETRATIONS SHALL BE UL APPROVED PER THE THE PENETRATION MADE IN ORDER TO MAINTAIN FIRE RATED INTEGRITY OF THE STRUCTURE.

CLEAN UP: ON PROJECT CLOSE-OUT, CLEAN ALL ELECTRICAL DEVICES, LIGHTING FIXTURES, LAMPS AND LENSES, AND REMOVE ALL PAINT SPATTERS FROM DEVICES, FIXTURES, AND PLATES. REPLACE ALL INOPERATIVE LAMPS.

CONDUIT ROUTING: ALL CONDUIT RUN OVERHEAD SHALL BE RUN AT THE BOTTOM OF THE FLOOR, ROOF STRUCTURE, OR LOWEST CHORD OF JOIST SPACE (AS APPLICABLE) ABOVE IN ORDER TO AVOID CONFLICTS WITH OTHER TRADES.

WIRING DEVICES: ALL RECEPTACLES AND SWITCHES SHALL BE LABELED WITH CLEAR PLASTIC LAMINATED LABEL WITH BLACK TEXT, NOTING PANELBOARD DESIGNATION AND CIRCUIT NUMBER FROM WHICH IT IS FED.

EQUIPMENT DEMONSTRATION: PROVIDE A DEMONSTRATION OF THE OPERATION OF ALL ELECTRICAL COMPONENTS.

CEILING AND MECHANICAL ROOM PLENUM: ALL WIRING THAT WILL NOT BE RUN IN METAL CONDUIT SHALL BE PLENUM RATED.

ELECTRICAL GENERAL DEMOLITION NOTES:

GENERAL: DEMOLITION DRAWINGS ARE BASED ON EXISTING PLANS AND FIELD INVESTIGATION PRIOR TO DEMOLITION. VISIT THE EXISTING BUILDING PRIOR TO BID IN ORDER TO BECOME FAMILIAR WITH THE EXISTING CONDITIONS AND IN ORDER TO AVOID CONFLICTS.

DASHED ITEMS: ALL ITEMS SHOWN DASHED ON DEMOLITION PLANS ARE EXISTING AND SHALL BE REMOVED COMPLETE INCLUDING BOXES, CONDUIT, WIRE, FASTENERS, AND ASSOCIATED APPURTENANCES UON.

SOLID ITEMS: ALL ITEMS SHOWN SOLID ON DEMOLITION PLANS ARE EXISTING TO REMAIN.

CIRCUITING TO REMAIN: WHERE AFFECTED BY NEW WORK, EXISTING CIRCUITING TO REMAIN SHALL BE REROUTED OR RECONNECTED AS REQUIRED, IN ORDER TO MAINTAIN CONTINUITY OF CIRCUIT.

REUSE OF EXISTING CIRCUITRY: EXISTING CIRCUITS SHALL BE REUSED WHERE CONVENIENT TO SERVE THE NEW LAYOUT. PROVIDE CIRCUIT MODIFICATIONS INDICATED OR REQUIRED TO MAINTAIN CONTINUITY OF EXISTING CIRCUITS THAT REMAIN.

EXISTING CONDUIT: ALL EXISTING CONDUITS AND WIRING THAT WILL NOT BE REUSED SHALL BE REMOVED. EXISTING CONDUIT TO REMAIN CONCEALED IN WALLS SHALL BE ABANDONED. EXISTING CONDUIT TO REMAIN BELOW FLOOR SLAB SHALL BE CUT OFF ONE INCH BELOW ROUGH FLOOR AND GROUTED FLUSH. ALL EXISTING WIRING IN CONDUITS TO BE ABANDONED SHALL BE DISCONNECTED FROM POWER SOURCE AND REMOVED.

REPAIR DAMAGE: EXERCISE CARE IN REMOVAL OF DEMOLITION ITEMS. REPAIR, AT NO ADDITIONAL COST TO OWNER, ANY DAMAGE CAUSED TO EXISTING CONSTRUCTION AND/OR EQUIPMENT TO REMAIN.

ASSOCIATED APPURTENANCES: REMOVE ALL ELECTRICAL APPURTENANCES (DISCONNECTS, STARTERS, WIRING, CONDUIT, ETC.) ASSOCIATED WITH EQUIPMENT TO BE REMOVED BY OTHERS.

KNOCKOUT PLUGS AND COVERS: ALL CONDUIT REMOVED SHALL BE REMOVED IN ITS ENTIRETY, INCLUDING FITTINGS, MOUNTING DEVICES, MOUNTING HARDWARE, ETC. PROVIDE CONDUIT PLUGS AND BLANKS FOR ALL OPENINGS CREATED BY THE REMOVAL OF CONDUIT. PROVIDE BLANK COVER PLATES FOR ALL OPENED OUTLET BOXES CREATED BY THE REMOVAL OF THE EQUIPMENT AND/OR DEVICES.

DEMOLISHED MATERIALS: ALL MATERIALS REMOVED UNDER DEMOLITION, NOT TO BE RELOCATED OR DESIGNATED TO BE TURNED OVER TO THE OWNER, SHALL BECOME PROPERTY OF THE CONTRACTOR AND SHALL BE REMOVED COMPLETELY FROM THE SITE.

SCHEDULE OUTAGES: ALL WORK AND ALL POWER OUTAGES SHALL BE SCHEDULED AT TIMES CONVENIENT TO THE OWNER.

NOTIFICATION: NOTIFY THE OWNER PRIOR TO TURNING OFF ANY CIRCUITS.

EXISTING CIRCUITS: IF DURING THE COURSE OF CONSTRUCTION, IT IS DETERMINED BY THE CONTRACTOR THAT AN EXISTING CIRCUIT BECOMES SPARE, THE CONTRACTOR SHALL UPDATE THE PANELBOARD DIRECTORY TO INDICATE SUCH, EVEN IF IT IS NOT EXPLICITLY MARKED ON THE ELECTRICAL PLANS.

GENERAL

1	KEYNOTE.
	LIMIT OF DEMOLITION WORK.
	POINT OF CONNECTION, NEW TO EXISTING.
X / XX	DETAIL OR SECTION NOTATION: ENUMERATION: A = DETAIL, 1 = SECTION ENUMERATION NUMBER OR LETTER SHEET WHERE DETAIL OR SECTION IS SHOWN

ELECTRICAL ABBREVIATIONS

A	AMPERE
AFF	ABOVE FINISHED FLOOR
AFG	ABOVE FINISHED GRADE
AHU	AIR HANDLING UNIT
AIC	AMPERE INTERRUPTING CURRENT
ATS	AUTOMATIC TRANSFER SWITCH
AV	AUDIO/VISUAL
BFG	BELOW FINISHED GRADE
C	CONDUIT
CB	CIRCUIT BREAKER
CKT	CIRCUIT
EC	EMPTY CONDUIT
EC	ELECTRICAL CONTRACTOR
ECB	ENCLOSED CIRCUIT BREAKER
EQUIP	EQUIPMENT
ETR	EXISTING TO REMAIN
EX	EXISTING
FLA	FULL LOAD AMPS
FPC	FIRE PROTECTION CONTRACTOR
GC	GENERAL CONTRACTOR
GFCI	GROUND FAULT CIRCUIT INTERRUPTER
GND	GROUND
IG	ISOLATED GROUND
JB	JUNCTION BOX
KVA	KILO-VOLT AMPERE
KW	KILO-WATT
MCA	MINIMUM CIRCUIT AMPACITY
MC	MECHANICAL CONTRACTOR
MC	METAL CLAD
MCB	MAIN CIRCUIT BREAKER
MFR	MANUFACTURER
MLO	MAIN LUGS ONLY
MOCP	MAXIMUM OVERCURRENT PROTECTION
MTD	MOUNTED
NEC	NATIONAL ELECTRICAL CODE
NF	NON-FUSED
NIC	NOT IN CONTRACT
NTS	NOT TO SCALE
P	POLE
PC	PLUMBING CONTRACTOR
PF	POWER FACTOR
PL	PROPERTY LINE
PNL	PANEL
PNLBD	PANELBOARD
Ø	PHASE
PRI	PRIMARY
RECP	RECEPTACLE
RL	RELOCATE EXISTING
SE	SERVICE ENTRANCE
SEC	SECONDARY
TBB	TELEPHONE BACKBOARD
TVSS	TRANSIENT VOLTAGE SURGE SUPPRESSER
TYP	TYPICAL
UON	UNLESS OTHERWISE NOTED
V	VOLTS
VAC	VOLTS ALTERNATING CURRENT
VAV	VARIABLE AIR VOLUME
VDC	VOLTS DIRECT CURRENT
W	WATTS/WIRE
WG	WIRE GUARD
WP	WEATHERPROOF
XFMR	TRANSFORMER

POWER

	SINGLE RECEPTACLE, 20A, 120V, 18"AFF, UON.
	DUPLEX RECEPTACLE, 20A, 120V, 18"AFF, UON.
	DUPLEX RECEPTACLE, GROUND FAULT INTERRUPTING TYPE, 20A, 120V, 18"AFF, UON.
	DUPLEX RECEPTACLE WITH ADDITIONAL ISOLATED GROUND WIRE, 20A, 120V, 18"AFF, UON.
	DUPLEX RECEPTACLE, 20A, 120V, 40"AFF OR 4" ABOVE COUNTER TOP OR IN CASEWORK (AS APPLICABLE), OR IN CASEWORK, AS APPLICABLE, UON.
	DUPLEX RECEPTACLE, GROUND FAULT INTERRUPTING TYPE, 20A, 120V, 40" AFF TO 4" ABOVE COUNTER TOP OR IN CASEWORK (AS APPLICABLE), OR IN CASEWORK, AS APPLICABLE, UON.
	QUADRUPLEX RECEPTACLES IN COMMON BOX, 20A, 120V, 18"AFF, UON.
WP	DUPLEX RECEPTACLE, GROUND FAULT INTERRUPTING TYPE, 20A, 120V, WITH COOPER MODEL WIU-1D (OR EQUAL) "WHILE-IN-USE" WEATHERPROOF COVER, 18"AFG UON.
EWC	ELECTRIC WATER COOLER CONNECTION, PROVIDE 20A, 120V GROUND FAULT INTERRUPTING TYPE DUPLEX RECEPTACLE. COORDINATE WITH EWC MANUFACTURER'S ROUGH-IN REQUIREMENTS. RECEPTACLE SHALL BE ACCESSIBLE THROUGH REMOVAL OF EWC COVER.
	DUPLEX RECEPTACLE, 20A, 120V, 18"AFF, UON. TOP RECEPTACLE SHALL BE CONNECTED TO LOCAL SWITCH.
	FLOORBOX WITH DUPLEX RECEPTACLE. COORDINATE EXACT LOCATION IN FIELD WITH IN-FLOOR DISTRIBUTION SYSTEM.
	FLOORBOX WITH DUPLEX RECEPTACLE AND TELE/DATA. COORDINATE EXACT LOCATION IN FIELD WITH IN-FLOOR DISTRIBUTION SYSTEM.
	RECESSED FLUSH MOUNTED MULTIPLE SERVICE POKE THROUGH FOR POWER, TELE/DATA, AND AV (WHERE INDICATED). CONFIRM REQUIRED TELE/DATA AND AV DEVICES WITH CLIENT'S VENDOR AND AV DRAWINGS. PROVIDE (1)3/4"C FOR POWER AND (1)1-1/2"C FOR TELE/DATA TO ABOVE ACCESSIBLE CEILING WITHIN THE SAME CONFERENCE. FINISH TO BE VERIFIED BY ARCHITECT.
TV	CABLE TELEVISION OUTLET WITH DUPLEX RECEPTACLE, EQUAL TO ARLINGTON TVBS505 BOX. PROVIDE DUPLEX RECEPTACLE AND 3/4"C WITH PULL STRING STUBBED ABOVE ACCESSIBLE CEILING AND TERMINATED WITH BUSHING.
	FLOOR BOX. REFER TO FLOOR BOX SCHEDULE SHEET EX.X FOR DETAILS.
	SURFACE METAL RACEWAY WITH 20A, 120V SINGLE RECEPTACLES MOUNTED AT 12" ON CENTER. MOUNT 1" ABOVE COUNTERTOP BACKSPLASH.
	SPECIAL RECEPTACLE. NEMA CONFIGURATION AS NOTED. MOUNT 18"AFF UON.
J	JUNCTION BOX - ABOVE CEILINGS OR FLUSH IN WALLS.
MGB	MAIN GROUND BAR
TMGB	TELECOM MAIN GROUND BAR
GB	GROUND BAR
	DISCONNECT SWITCH - SIZE AS INDICATED ON PLANS 30/2/20/3R— NEMA RATING (IF OTHER THAN 1) FUSE SIZE (AMPS), N.F. INDICATES NON-FUSED No. OF POLES SIZE (AMPS)
$M	HORSEPOWER RATED MOTOR SWITCH
	MOTOR CONNECTION.
	COMBINATION MOTOR STARTER AND DISCONNECT SWITCH, MOUNT WITHIN SITE OF MOTOR 5'-0"AFF, MAXIMUM, UON.
FF WP	FLEXIBLE FURNITURE CONNECTION, 6"AFF UON. PROVIDE (1) JUNCTION BOX FOR CONNECTION OF POWER CIRCUITRY (CIRCUITS AS INDICATED ON DRAWINGS) AND PROVIDE (1) JUNCTION BOX WITH 1"C STUBBED ABOVE ACCESSIBLE CEILING FOR TELEPHONE AND DATA CONNECTIONS. PROVIDE POWER AND CONDUIT CONNECTIONS TO FURNITURE. COORDINATE FURNITURE WIRING REQUIREMENTS AND CONNECTIONS WITH FURNITURE EQUIPMENT PROVIDER. PROVIDE LIQUID-TIGHT RACEWAY CONNECTION FROM JUNCTION BOX TO FURNITURE PARTITION.
PP	POWER POLE
CR	DROP CORD/REEL, 20A, 120V, MOUNTED TO CEILING WITH (3) SINGLE RECEPTACLES AT CORD END.
M	EMON DMON METER. REFER TO POWER PLAN FOR ADDITIONAL INFORMATION.
VFD	VARIABLE FREQUENCY DRIVE (FURNISHED WITH ASSOCIATED MECHANICAL EQUIPMENT, INSTALLED BY EC), WITH INTEGRAL DISCONNECT SWITCH.
SPD	SURGE PROTECTIVE DEVICE
	ELECTRICAL METER. MOUNT 54" AFF (MINIMUM).
	ELECTRICAL PANELBOARD
	EMERGENCY POWER ELECTRICAL PANELBOARD
	DRY-TYPE TRANSFORMER
	ELECTRICAL CIRCUIT RUN IN CONDUIT AND CIRCUIT HOMERUN TO PANELBOARD (PANEL AND CIRCUIT DESIGNATION AS INDICATED). AS A MINIMUM CONDITION, EACH SINGLE PHASE CIRCUIT SHALL HAVE 1 #12 PHASE CONDUCTOR, 1 #12 NEUTRAL CONDUCTOR, AND 1 #12 GROUNDING CONDUCTOR IN 3/4" CONDUIT. PROVIDE ADDITIONAL PHASE CONDUCTORS AS REQUIRED FOR "MULTIPLE PHASED" ELECTRICAL LOADS. PROVIDE ADDITIONAL "SWITCH LEG" CONDUCTORS TO PROVIDE THE LIGHT FIXTURE CONTROL INDICATED. MULTIPLE SINGLE PHASE CONDUCTORS SHALL BE GROUPED TOGETHER IN A COMMON CONDUIT IN ACCORDANCE WITH THE NEC AND AT THE CONTRACTOR'S DISCRETION. NEUTRAL AND GROUNDING CONDUCTORS SHALL BE SHARED AS ALLOWED BY THE NEC. CONDUIT LARGER THAN 3/4" AND CONDUCTORS LARGER THAN #12 SHALL BE AS INDICATED.

RISER DIAGRAM

M	METER BASE WITH METER (METER PROVIDED BY UTILITY COMPANY).
	CIRCUIT BREAKER.
	FUSE.
	FUSED SWITCH.
	GROUND CONNECTION.
	TRANSFORMER.
N	NEUTRAL BUS CONNECTION.
G	GROUND BUS CONNECTION.

VILLAGE OF OAK PARK
CONSTRUCTION DOCUMENT(S)
REVIEWED FOR COMPLIANCE

These document(s) has been reviewed for conformance with applicable provisions of the codes and ordinances of the Village of Oak Park. The permit process is a check and balance system that normally involves a licensed designer, plans examiner, contractor, and inspector to ensure the best quality and safest construction possible. As much as the mentioned professionals attempt to achieve full code compliance every effort has been made to identify all code deficiencies however; failure to identify a code deficiency during plan review and inspection does not alleviate any obligation to comply with all applicable code provisions. Ultimately the owner and contractor are responsible for full code compliance.

KEEP A PRINTED APPROVED COPY OF THE PLANS ON SITE AT ALL TIMES FOR CONTRACTORS AND INSPECTORS

- Signage is required to provide the address, contractor name and emergency contact information
- Before you dig call J.U.L.I.E @ 811
- Construction hours are 7:00AM through 6:00PM all seven days a week
- Address numbers shall be posted in the front and in the alley of the site (if applicable)
- Trees shall be protected in the parkways; do not block sidewalks or alleyways
- Portable toilets shall be properly maintained a minimum of 10' from the lot line
- Construction fencing shall secure the site and materials(6' high for res. & 8' high for comm. sites)
- Respect the neighboring properties; do not trespass on or damage neighboring properties
- Keep the site clean, safe, organized and free from debris.
- Maintain all guardrails, walkways, ladders and stairs in a safe condition

Any and all changes and/or deviations to the approved plans shall be proposed in writing, in triplicate, for a complete re-review and re-approval.

625 W Adams Street – 19th Floor
Chicago, IL 60661
312.320.3668

LICENSED PROFESSIONAL ENGINEER
ALEXANDER G. RADKOFF
062-073334
OF ILLINOIS
AGR - 08.22.2025

DESIGN FIRM LIC. NO: 184008703-002
DESIGN FIRM LIC. NO. EXP.: 04.30.2027
ILLINOIS LICENCE NUMBER: 062.073334
LIC. EXP.: 11.30. 2025

--

SIDEWALK VAULT ALTERATIONS

1144 W LAKE ST
OAK PARK, IL 60301

NO.	DESCRIPTION	DATE
1 (revision triangle)	PERMIT REVISION 1	08/22/2025
1	ISSUED FOR PERMIT	07/28/2025

JOB NO.: 25.068

SCALE:

TITLE: ELECTRICAL DATA SHEET

SHEET: E0.1

7/24/2025 1:06:19

ELECTRICAL SPECIFICATIONS

GENERAL

CODES AND STANDARDS - THE LATEST EFFECTIVE PUBLICATIONS OF ALL APPLICABLE STANDARDS, CODES, ETC., AS ADOPTED BY THE AUTHORITY HAVING JURISDICTION, STATE AND LOCAL GOVERNMENTS, AS THEY APPLY, FORM PART OF THESE SPECIFICATIONS AS IF WERE WRITTEN FULLY HEREIN AND CONSTITUTE MINIMUM REQUIREMENTS. THE FOLLOWING WILL BE REFERRED TO THROUGHOUT IN ABBREVIATED FORMS.

2021 INTERNATIONAL BUILDING CODE (IBC) WITH OAK PARK LOCAL AMENDMENTS (EFFECTIVE 01-01-2025)
2021 INTERNATIONAL EXISTING BUILDING CODE (IEBC) WITH OAK PARK LOCAL AMENDMENTS (EFFECTIVE 01-01-2025
2021 INTERNATIONAL MECHANICAL CODE (IMC) WITH OAK PARK LOCAL AMENDMENTS (EFFECTIVE 01-01-2025)
2014 STATE OF ILLINOIS PLUMBING CODE WITH OAK PARK LOCAL AMENDMENTS (EFFECTIVE 03-18-2025)
2021 INTERNATIONAL FUEL GAS CODE (IGC) WITH OAK PARK LOCAL AMENDMENTS (EFFECTIVE 01-01-2025)
2022 ILLINOIS ENERGY CONSERVATION CODE (2021 IECC) (EFFECTIVE 01-01-2025)
2020 NATIONAL ELECTRIC CODE (NEC) WITH OAK PARK LOCAL AMENDMENTS (EFFECTIVE 01-01-2025)
INSTITUTE OF ELECTRICAL AND ELECTRONIC ENGINEERS (IEEE).
THE AMERICANS WITH DISABILITIES ACT (ADA).
APPLICABLE STANDARDS OF UNDERWRITER'S LABORATORIES, INC. (UL).
APPLICABLE STANDARDS OF NATIONAL FIRE PROTECTION ASSOCIATION (NFPA).
UNDERWRITERS LABORATORY (UL), IRI, FM
AMERICAN NATIONAL STANDARDS INSTITUTE (ANSI) APPLICABLE STATE AND LOCAL CODES.
APPLICABLE STATE AND LOCAL CODES.
INTERNATIONAL ELECTRICAL TESTING ASSOCIATION (NETA).

A. SCOPE OF WORK - PROVIDE ALL LABOR, MATERIALS, EQUIPMENT, APPURTENANCES AND SERVICES TO PROVIDE A COMPLETE ELECTRICAL INSTALLATION AS SHOWN ON THE DRAWINGS AND AS DESCRIBED IN THESE SPECIFICATIONS.
B. SITE VISIT - THE CONTRACTOR SHALL VISIT THE SITE PRIOR TO SUBMITTING HIS BID TO BECOME FAMILIAR WITH THE EXISTING CONDITIONS AND DETERMINE THE EXTENT OF WORK. LACK OF KNOWLEDGE OF EXISTING CONDITIONS WILL NOT BE CONSIDERED A BASIS FOR CHANGE ORDERS. PRIOR TO ORDERING EQUIPMENT, CONTRACTOR SHALL VERIFY THAT EQUIPMENT TO BE PROVIDED UNDER THIS CONTRACT IS ACCEPTABLE AND CAN FIT INTO BUILDING AND ROOM. EXPENSE INCURRED BY THE CONTRACTOR, WHICH IN THE ENGINEER'S OPINION COULD HAVE BEEN AVOIDED BY THIS STEP, SHALL NOT BE A BASIS FOR CHANGE ORDERS.
C. DRAWINGS AND SPECIFICATIONS - THE DRAWINGS ARE DIAGRAMMATIC AND INDICATE THE GENERAL EXTENT, CHARACTER AND ARRANGEMENT OF EQUIPMENT, FIXTURES AND CONDUIT AND WIRING SYSTEMS. IT IS THE INTENTION OF THESE SPECIFICATIONS AND DRAWINGS TO FULLY COVER ALL WORK AND MATERIALS FOR A COMPLETE, FIRST-CLASS ELECTRICAL INSTALLATION, AND ANY DEVICES SUCH AS PULL BOXES, STARTERS, AND DISCONNECT SWITCHES, USUALLY EMPLOYED IN THIS CLASS OF WORK THOUGH NOT SPECIFICALLY MENTIONED OR SHOWN ON THE DRAWINGS OR IN THIS SPECIFICATION, BUT WHICH MAY BE NECESSARY FOR THE SATISFACTORY COMPLETION OF THE WORK, SHALL BE FURNISHED AND INSTALLED BY THE CONTRACTOR AS A PART OF HIS TOTAL WORK UNDER THIS DIVISION. CONSULT THE SPECIFICATIONS AND DRAWINGS OF ALL OTHER TRADES AND PERFORM ALL ELECTRICAL WORK REQUIRED THEREIN. COOPERATE WITH ALL OTHER CONTRACTORS OR SUBCONTRACTORS TO FURNISH COMPLETE WORKABLE SYSTEMS.
D. DURING CONSTRUCTION - KEEP AN ACCURATE RECORD OF ALL DEVIATIONS BETWEEN THE WORK AS SHOWN ON THE CONTRACT DRAWINGS AND THAT WHICH IS ACTUALLY INSTALLED ON A SET OF PRINTS OF THE ELECTRICAL DRAWINGS, AND NOTE CHANGES THEREON WITH RED MARKS, IN A NEAT AND ACCURATE MANNER. WHEN ALL REVISIONS HAVE BEEN SHOWN ON THESE PRINTS TO INDICATE THE WORK AS FINALLY INSTALLED, THE PRINTS SHALL BE DELIVERED TO THE ENGINEER, BEFORE FINAL PAYMENT.
E. PERMITS, INSPECTION AND TESTS - THE RIGHT IS RESERVED TO INSPECT AND TEST ANY PORTION OF THE INSTALLATION/EQUIPMENT DURING THE PROGRESS OF ITS ERECTION. THIS CONTRACTOR SHALL TEST ALL WIRING FOR CONTINUITY AND GROUNDS BEFORE CONNECTING ANY FIXTURES OR DEVICES. THIS CONTRACTOR SHALL TEST THE ENTIRE SYSTEM WHEN THE WORK IS FINALLY COMPLETED TO ENSURE THAT ALL PORTIONS ARE FREE FROM SHORT CIRCUITS AND GROUNDS.
F. SECURE AND PAY - FOR ALL REQUIRED PERMITS AND INSPECTIONS. INSPECTION CERTIFICATES FROM LOCAL AUTHORITIES HAVING JURISDICTION SHALL BE DELIVERED TO THE OWNER BEFORE FINAL PAYMENT.
G. SUBMITTALS - SUBMIT SHOP DRAWINGS, PRODUCT DATA AND SAMPLES WITHIN THIRTY (30) DAYS OF AWARD OF CONTRACT AND IN ACCORDANCE WITH THE GENERAL CONDITIONS AND SUPPLEMENTARY CONDITIONS. SUBMITTALS ARE REQUIRED FOR ALL SAFETY SWITCHES, ENCLOSED CIRCUIT BREAKERS, PANELBOARDS, TRANSIENT VOLTAGE SURGE SUPPRESSORS, SURGE PROTECTIVE DEVICE (SPD), TRANSFORMERS, LIGHTING FIXTURES, FIRE ALARM SYSTEM, AND SPECIALTY DEVICES PROVIDED UNDER THIS SPECIFICATION. REVIEW OF SUBMITTALS BY THE ENGINEER AND ANY ASSOCIATED ACTION TAKEN BY THE ENGINEER DOES NOT RELIEVE THE CONTRACTOR OF ANY REQUIREMENTS SET FORTH BY THE CONTRACT DRAWINGS.
H. PROVIDE ALL CUTTING, PATCHING, PAINTING AND REFINISHING REQUIRED FOR INSTALLATION OF THE ELECTRICAL WORK.
I. DAILY AND WHEN DIRECTED BY THE OWNER OR ENGINEER REMOVE ALL DEBRIS FROM THE PREMISES.
J. DEFINITIONS:
K. "FURNISH" SHALL MEAN TO PURCHASE, DELIVER TO JOB SITE, AND UNLOAD FROM TRUCK AT JOB SITE. "INSTALL" SHALL MEAN TO MOUNT IN PLACE, MAKE ALL NECESSARY CONNECTIONS AS SPECIFIED ON PLANS, AND ON SHOP DRAWINGS.
L. "PROVIDE" SHALL MEAN TO FURNISH AND INSTALL.
M. ELECTRICAL CONTRACTOR SHALL COORDINATE ALL EQUIPMENT VOLTAGES WITH MECHANICAL CONTRACTORS AND/OR OWNER'S/ARCHITECT'S PROVIDED EQUIPMENT PRIOR TO EQUIPMENT ORDER.

PRODUCTS

A. MANUFACTURING STANDARDS - MATERIAL SHALL BE NEW AND APPROVED AND LABELED BY UL WHEREVER STANDARDS HAVE BEEN ESTABLISHED BY THAT AGENCY. DEFECTIVE EQUIPMENT OR EQUIPMENT DAMAGED IN THE COURSE OF INSTALLATION OR TEST SHALL BE REPLACED OR REPAIRED IN A MANNER MEETING THE APPROVAL OF THE OWNER. ALL ITEMS OF THE SAME TYPE AND RATING SHALL BE IDENTICAL.
B. TRADE NAMES - UNLESS SPECIFICALLY IDENTIFIED OTHERWISE, MANUFACTURERS' NAMES AND CATALOG NUMBERS INDICATED HEREIN AND ON THE DRAWINGS ARE NOT INTENDED TO BE PROPRIETARY DESIGNATIONS. THEY ARE TO INDICATE GENERAL TYPE AND QUALITY OF MATERIALS AND EQUIPMENT REQUIRED. EQUIPMENT AND MATERIAL BY OTHER MANUFACTURERS WHICH IN THE OPINION OF THE ENGINEER ARE OF EQUAL QUALITY AND WHICH WILL PRODUCE THE SAME RESULTS WILL BE CONSIDERED ACCEPTABLE.
C. MOTORS - MOTORS SHALL BE PROVIDED WITH DISCONNECTING MEANS.
D. POWER WIRING - UP TO AND INCLUDING MOTOR CONNECTIONS FOR ALL EQUIPMENT PROVIDED UNDER OTHER DIVISIONS OF THIS SPECIFICATION SHALL BE INCLUDED IN THIS DIVISION. WHERE MANUAL MOTOR CONTROL SWITCHES FOR SINGLE PHASE MOTORS ARE INDICATED, THEY SHALL BE PROVIDED AND WIRED COMPLETE UNDER THIS DIVISION. MOTOR CONTROLLERS AND MOTOR STARTERS FURNISHED UNDER OTHER DIVISIONS SHALL BE SET IN PLACE AND CONNECTED TO SOURCE AND LOAD UNDER THIS DIVISION. IN GENERAL, MOTORS WILL BE PROVIDED WITH THE EQUIPMENT THEY DRIVE AND ARE NOT PART OF THIS WORK UNDER THIS DIVISION, EXCEPT THAT THEY SHALL BE CONNECTED HEREUNDER.
E. OBTAIN APPROVED SHOP DRAWINGS - SHOWING WIRING DIAGRAMS, CONNECTION DIAGRAMS, ROUGH-IN AND HOOKUP DETAILS, FROM ALL CONTRACTORS FOR ALL EQUIPMENT AND COMPLY THEREWITH.
F. CONTROL, INTERLOCK AND INTERNAL EQUIPMENT - WIRING REGARDLESS OF VOLTAGE SHALL BE PROVIDED BY OTHERS UNLESS SPECIFICALLY SHOWN HERE.
G. TEMPORARY ELECTRICAL SERVICE - TEMPORARY ELECTRICAL SERVICE AT 120/240V, 1-PHASE AND OR 120/208V, 3-PHASE WITH GROUND FAULT INTERRUPTER WITH SOLIDLY GROUNDED NEUTRAL SHALL BE PROVIDED. AMPERAGE AND VOLTAGE SHALL BE COORDINATED WITH SITE AND PROJECT SPECIFIC REQUIREMENTS. PROVIDE ALL NECESSARY TEMPORARY LIGHTING AND RECEPTACLES. GENERAL CONTRACTOR WILL PAY ALL CHARGES, WHICH MAY BE MADE BY THE POWER COMPANY FOR TEMPORARY SERVICE.
H. GROUNDING - THE ENTIRE ELECTRICAL SYSTEM, INCLUDING EQUIPMENT FRAMES, CONDUIT, SWITCHES, CONTROLLERS, WIREWAYS, AND ALL OTHER SUCH EQUIPMENT SHALL BE PERMANENTLY AND EFFECTIVELY GROUNDED IN ACCORDANCE WITH THE NEC. GROUNDING OF EACH TRANSFORMER SECONDARY SHALL BE PROVIDED AND EACH SHALL BE CONSIDERED AS A SEPARATE SERVICE GROUND. PROVIDE A SEPARATE GROUND CONDUCTOR IN ALL BRANCH CIRCUIT CONDUITS SIZED IN ACCORDANCE WITH THE NEC.
I. SCHEDULE OF WORK - THE SCHEDULE OF THE ELECTRICAL WORK SHALL BE ARRANGED TO SUIT THE PROGRESS OF WORK BY THE OTHER TRADES AND SHALL IN NO WAY RETARD PROGRESS OF CONSTRUCTION OF THE PROJECT.
J. WORK UNDER THIS DIVISION - SHALL PROCEED IN ADVANCE OF THE WORK OF OTHERS WHENEVER POSSIBLE, ELIMINATING ALL CUTTING AND PATCHING. WHEN SUCH PROCEDURE IS IMPOSSIBLE, CUTTING AND PATCHING SHALL BE DONE IN AN APPROVED MANNER. CUTTING SHALL NOT ENDANGER STRUCTURAL INTEGRITY IN ANY WAY. PATCHING SHALL EXACTLY MATCH CONTIGUOUS WORK. ACTUAL WORK OF CUTTING AND PATCHING OF EXISTING SURFACES SHALL BE PERFORMED BY THE SUBCONTRACTOR WHO ORIGINALLY PREPARED THESE SURFACES, E.G., CUTTING AND PATCHING OF MASONRY WALL WILL BE PERFORMED BY THE MASONRY SUBCONTRACTOR. COSTS OF SUCH CUTTING AND PATCHING SHALL BE BORNE BY THE ELECTRICAL SUBCONTRACTOR. CUTTING SHALL BE CAREFULLY DONE AND DAMAGE TO BUILDING, PIPING, WIRING OR EQUIPMENT AS A RESULT OF CUTTING SHALL BE REPAIRED BY SKILLED MECHANICS OF TRADE INVOLVED.
K. STORAGE AND MATERIALS - SPACE WILL BE ASSIGNED TO THE CONTRACTOR BY THE OWNER FOR THE STORAGE OF MATERIAL. THIS CONTRACTOR WILL BE RESPONSIBLE FOR THE PROTECTION AND SAFEKEEPING OF MATERIALS, TOOLS, AND EQUIPMENT. ALL MATERIALS AND EQUIPMENT SHALL BE KEPT IN ITS ASSIGNED PLACE UNTIL THE TIME OF ITS INSTALLATION. EXCESS MATERIALS, DIRT AND REFUSE SHALL BE PROMPTLY REMOVED FROM THE WORK SITE.
L. LABELING OF EQUIPMENT - ALL PANELBOARDS, CABINETS, SAFETY SWITCHES, MOTOR DISCONNECT SWITCHES, AND MOTOR CONTROLLERS SHALL BE IDENTIFIED BY MACHINE ENGRAVED LAMINATED PLASTIC DESIGNATION PLATES PERMANENTLY ATTACHED THERETO WITH SELF-TAPPING SCREWS OR RIVETS. ALL COMPONENT PARTS OF EACH ITEM OF EQUIPMENT OR DEVICE SHALL BEAR THE MANUFACTURER'S NAMEPLATE, GIVING NAME OF MANUFACTURER, DESCRIPTION, SIZE TYPE, SERIAL AND MODEL NUMBER AND ELECTRICAL CHARACTERISTICS IN ORDER TO FACILITATE MAINTENANCE OR REPLACEMENT. PROVIDE UPDATED PANEL DIRECTORIES FOR ALL NEW AND MODIFIED EXISTING PANELS TO INDICATE CORRECT CIRCUITING DESIGNATIONS.
M. COORDINATION - COOPERATE AND COORDINATE EFFORTS WITH ALL CONTRACTORS ON THE PROJECT. THIS IS ESPECIALLY IMPORTANT IN DETERMINING EXACT LOCATIONS OF ALL SWITCHES, RECEPTACLES AND LIGHTING FIXTURES. ARRANGE LIGHTING FIXTURES IN ACCORDANCE WITH THE ARCHITECTURAL REFLECTED CEILING PLANS UNLESS OTHERWISE INDICATED. COORDINATE LIGHTING FIXTURE LOCATIONS WITH GRILLES, DIFFUSERS, ACCESS PANELS, ETC. VERIFY CEILING AND WALL CONSTRUCTION AND MATERIAL PRIOR TO ORDERING LIGHTING FIXTURES OR OTHER DEVICES TO ENSURE PROPER FIXTURE OR DEVICE IS FURNISHED TO MATCH CONSTRUCTION. THIS VERIFICATION MUST BE EXECUTED REGARDLESS OF INFORMATION PLACED ON THE DRAWINGS. ANY COST INCURRED WHICH IN THE OPINION OF THE OWNER, COULD HAVE BEEN AVOIDED BY THIS STEP SHALL BE THE RESPONSIBILITY OF THE ELECTRICAL CONTRACTOR.
N. GUARANTEE OF WORK - CONTRACTOR GUARANTEES BY HIS ACCEPTANCE OF THE CONTRACT THAT ALL WORK INSTALLED IS FREE FROM ANY AND ALL DEFECTS IN WORKMANSHIP AND/OR MATERIALS, AND THAT THE APPARATUS WILL DEVELOP CAPACITIES AND CHARACTERISTICS SPECIFIED, AND THAT IF, DURING THE PERIOD OF ONE YEAR OR AS OTHERWISE SPECIFIED, FROM DATE OF CERTIFICATE OF COMPLETION AND ACCEPTANCE OF THE WORK ANY SUCH DEFECTS IN WORKMANSHIP, MATERIAL OR PERFORMANCE APPEAR, HE WILL, WITHOUT COST TO THE OWNER, REMEDY SUCH DEFECTS WITHIN A REASONABLE TIME TO BE SPECIFIED IN NOTICE. IN DEFAULT THEREOF, THE OWNER MAY HAVE SUCH WORK DONE AND CHARGE COST TO CONTRACTOR. EQUIPMENT GUARANTEES FROM DATE OF "START-UP" WILL NOT BE RECOGNIZED.
O. ALL ELECTRICAL WORK SHALL BE INSTALLED TO MAINTAIN ALL CLEARANCES AS DEFINED IN ARTICLE NEC 110.26 AND ITS SUBSEQUENT SUBSECTIONS. NO DUCT, CONDUIT, PIPE, ETC. NOT DIRECTLY ASSOCIATED WITH THAT PIECE OF ELECTRICAL EQUIPMENT SHALL BE LOCATED IN THE CLEARANCE SPACE AS DEFINED BY THE NEC. ELECTRICAL CONTRACTOR IS RESPONSIBLE FOR COORDINATION OF OTHER TRADES TO MAINTAIN THESE CLEARANCES.

LOW-VOLTAGE ELECTRICAL POWER CONDUCTORS AND CABLES

GENERAL

A. SUBMITTALS
   1. PRODUCT DATA: FOR EACH TYPE OF PRODUCT.

PRODUCTS

A. COPPER BUILDING WIRE
   1. DESCRIPTION: FLEXIBLE, INSULATED AND UNINSULATED, DRAWN COPPER CURRENT-CARRYING CONDUCTOR WITH AN OVERALL INSULATION LAYER OR JACKET, OR BOTH, RATED 600 V OR LESS.
   2. CONDUCTOR INSULATION:
      a. TYPE THHN AND TYPE THWN-2: COMPLY WITH UL 83.
      b. TYPE XHHW-2: COMPLY WITH UL 44.
B. CONNECTORS AND SPLICES
   1. DESCRIPTION: FACTORY-FABRICATED CONNECTORS, SPLICES, AND LUGS OF SIZE, AMPACITY RATING, MATERIAL, TYPE, AND CLASS FOR APPLICATION AND SERVICE INDICATED; LISTED AND LABELED AS DEFINED IN NFPA 70, BY A QUALIFIED TESTING AGENCY, AND MARKED FOR INTENDED LOCATION AND USE.
   2. JACKETED CABLE CONNECTORS: FOR STEEL AND ALUMINUM JACKETED CABLES, ZINC DIE-CAST WITH SET SCREWS, DESIGNED TO CONNECT CONDUCTORS SPECIFIED IN THIS SECTION.
   3. LUGS: ONE PIECE, SEAMLESS, DESIGNED TO TERMINATE CONDUCTORS SPECIFIED IN THIS SECTION. MATERIAL SHALL BE COPPER. TYPE SHALL BE ONE OR TWO HOLE WITH STANDARD OR LONG BARRELS. TERMINATIONS SHALL BE COMPRESSION.

EXECUTION

A. CONDUCTOR MATERIAL APPLICATIONS
   1. FEEDERS: COPPER. CONDUCTORS SHALL BE SOLID OR STRANDED FOR NO. 10 AWG AND SMALLER; STRANDED FOR NO. 8 AWG AND LARGER.
   2. BRANCH CIRCUITS: COPPER. SOLID OR STRANDED FOR NO. 10 AWG AND SMALLER; STRANDED FOR NO. 8 AWG AND LARGER. WIRE SMALLER THAN NO. 12 AWG SHALL NOT BE USED FOR LIGHTING AND POWER CIRCUITS.
   3. POWER-LIMITED FIRE ALARM AND CONTROL: SOLID FOR NO. 12 AWG AND SMALLER.
B. CONDUCTOR INSULATION AND MULTICONDUCTOR CABLE APPLICATIONS AND WIRING METHODS
   1. SERVICE ENTRANCE: TYPE THHN-THWN OR XHHW-2, SINGLE CONDUCTORS IN RACEWAY.
   2. FEEDERS AND BRANCH CIRCUITING: TYPE THHN-THWN, SINGLE CONDUCTORS IN RACEWAY.
C. INSTALLATION OF CONDUCTORS AND CABLES
   1. CONCEAL CABLES IN FINISHED WALLS, CEILINGS, AND FLOORS UNLESS OTHERWISE INDICATED.
   2. USE MANUFACTURER-APPROVED PULLING COMPOUND OR LUBRICANT WHERE NECESSARY; COMPOUND USED MUST NOT DETERIORATE CONDUCTOR OR INSULATION. DO NOT EXCEED MANUFACTURER'S RECOMMENDED MAXIMUM PULLING TENSIONS AND SIDEWALL PRESSURE VALUES.
   3. INSTALL EXPOSED CABLES PARALLEL AND PERPENDICULAR TO SURFACES OF EXPOSED STRUCTURAL MEMBERS, AND FOLLOW SURFACE CONTOURS WHERE POSSIBLE.
   4. METAL CLAD CABLING SHALL BE SECURED EVERY SIX FEET AND WITHIN 12 INCHES OF EVERY BOX OR TERMINATION AS REQUIRED BY CODE. INSTALLATION OF METAL CLAD CABLING SHALL BE DONE IN A NEAT AND WORKMANLIKE MANNER AND FOLLOW OR BE PERPENDICULAR TO BUILDING LINES.
   5. EACH DESIGNED CIRCUIT HOMERUN SHALL HAVE ITS OWN INDIVIDUAL GROUND CONDUCTOR. CONDUIT SHALL NOT BE USED A GROUND CONDUCTOR.
D. CONNECTIONS
   1. TIGHTEN ELECTRICAL CONNECTORS AND TERMINALS ACCORDING TO MANUFACTURER'S PUBLISHED TORQUE-TIGHTENING VALUES. IF MANUFACTURER'S TORQUE VALUES ARE NOT INDICATED, USE THOSE SPECIFIED IN UL 486A-486B.
   2. MAKE SPLICES, TERMINATIONS, AND TAPS THAT ARE COMPATIBLE WITH CONDUCTOR MATERIAL AND THAT POSSESS EQUIVALENT OR BETTER MECHANICAL STRENGTH AND INSULATION RATINGS THAN UNSPLICED CONDUCTORS.
   3. WIRING AT OUTLETS: INSTALL CONDUCTOR AT EACH OUTLET, WITH AT LEAST 6 INCHES OF SLACK.
   4. PUSH-ON WIRE CONNECTORS, OTHER THAN FOR LUMINAIRE DISCONNECTS, ARE NOT PERMITTED.
   5. ALL EXTERIOR WIRING CONNECTIONS, AND THOSE MADE AT OR BELOW GRADE SHALL BE WATERPROOF WITH UL LISTED WATERPROOF CONNECTORS.
   6. COPPER CONDUCTORS #10 AWG AND SMALLER SHALL BE TERMINATED AND SPLICED WITH WIRE NUT CONNECTORS. THE NYLON SELF_INSULATED TYPE SHALL BE USED TO ISOLATE THE TERMINATION FROM OTHER METAL PARTS AND EQUIPMENT.
   7. COPPER CONDUCTORS #8 AWG AND LARGER SHALL BE TERMINATED, SPLICED, AND TAPPED WITH COLOR_KEYED COMPRESSION CONNECTORS. THE MANUFACTURERS RECOMMENDED TOOLS AND DIES SHALL BE USED.
   8. COPPER CABLE LUG CONNECTIONS #8 AND LARGER TO COPPER BUS BAR MAINS AND BRANCHES SHALL USE COPPER SOLDERLESS CONNECTORS HAVING EITHER 2_BOLT CAST COPPER CLAMPS OR COMPRESSION CONNECTORS, WITH MANUFACTURER'S RECOMMENDED HEXAGONAL DIES AND HYDRAULIC COMPRESSION TOOLS.
   9. PLENUM RATED CABLE OR WIRING IN METAL CONDUIT SHALL BE UTILIZED IN ALL PLENUM RATED SPACES.
   10. WHERE AC CABLE IS PERMITTED FOR INSTALL AND INSTALLED IN ACCESSIBLE ATTICS, THE INSTALLATION SHALL FOLLOW ALL GUIDELINES OF NEC 320.23.

GROUNDING AND BONDING FOR ELECTRICAL SYSTEMS

GENERAL

A. SUBMITTALS
   1. PRODUCT DATA: FOR EACH TYPE OF PRODUCT INDICATED.

PRODUCTS

A. SYSTEM DESCRIPTION
   1. ELECTRICAL COMPONENTS, DEVICES, AND ACCESSORIES: LISTED AND LABELED AS DEFINED IN NFPA 70, BY A QUALIFIED TESTING AGENCY, AND MARKED FOR INTENDED LOCATION AND APPLICATION.
   2. COMPLY WITH UL 467 FOR GROUNDING AND BONDING MATERIALS AND EQUIPMENT.
B. CONDUCTORS
   1. INSULATED CONDUCTORS: COPPER OR TINNED-COPPER WIRE OR CABLE INSULATED FOR 600 V UNLESS OTHERWISE REQUIRED BY APPLICABLE CODE OR AUTHORITIES HAVING JURISDICTION.
   2. GROUNDING BUS: PREDRILLED RECTANGULAR BARS OF ANNEALED COPPER, 1/4 BY 4 INCHES IN CROSS SECTION, WITH 9/32-INCH HOLES SPACED 1-1/8 INCHES APART. STAND-OFF INSULATORS FOR MOUNTING SHALL COMPLY WITH UL 891 FOR USE IN SWITCHBOARDS, 600 V AND SHALL BE LEXAN OR PVC, IMPULSE TESTED AT 5000 V. MINIMUM SIZE SHALL BE 24" IN LENGTH.
C. CONNECTORS
   1. LISTED AND LABELED BY AN NRTL ACCEPTABLE TO AUTHORITIES HAVING JURISDICTION FOR APPLICATIONS IN WHICH USED AND FOR SPECIFIC TYPES, SIZES, AND COMBINATIONS OF CONDUCTORS AND OTHER ITEMS CONNECTED.
D. GROUNDING ELECTRODES
   1. GROUND RODS: COPPER-CLAD STEEL; 3/4 INCH BY 10 FEET.
   2. GROUND PLATES: 1/4 INCH THICK, HOT-DIP GALVANIZED.

EXECUTION

A. APPLICATIONS
   1. CONDUCTORS: INSTALL SOLID CONDUCTOR FOR NO. 8 AWG AND SMALLER, AND STRANDED CONDUCTORS FOR NO. 6 AWG AND LARGER UNLESS OTHERWISE INDICATED.
   2. UNDERGROUND GROUNDING CONDUCTORS: INSTALL BARE COPPER CONDUCTOR, NO. 3/0 AWG MINIMUM. BURY AT LEAST 24 INCHES BELOW GRADE.
   3. ISOLATED GROUNDING CONDUCTORS: GREEN-COLORED INSULATION WITH CONTINUOUS YELLOW STRIPE. ON FEEDERS WITH ISOLATED GROUND, IDENTIFY GROUNDING CONDUCTOR WHERE VISIBLE TO NORMAL INSPECTION, WITH ALTERNATING BANDS OF GREEN AND YELLOW TAPE, WITH AT LEAST THREE BANDS OF GREEN AND TWO BANDS OF YELLOW.
   4. GROUNDING BUS: INSTALL IN ELECTRICAL EQUIPMENT ROOMS, IN ROOMS HOUSING SERVICE EQUIPMENT, IN ALL IDF AND MDF ROOMS, AND ELSEWHERE AS INDICATED.
      a. INSTALL BUS HORIZONTALLY, ON INSULATED SPACERS 2 INCHES MINIMUM FROM WALL, 6 INCHES ABOVE FINISHED FLOOR UNLESS OTHERWISE INDICATED.
      b. WHERE INDICATED ON BOTH SIDES OF DOORWAYS, ROUTE BUS UP TO TOP OF DOOR FRAME, ACROSS TOP OF DOORWAY, AND DOWN; CONNECT TO HORIZONTAL BUS.
   5. CONDUCTOR TERMINATIONS AND CONNECTIONS:
      a. PIPE AND EQUIPMENT GROUNDING CONDUCTOR TERMINATIONS: BOLTED CONNECTORS.
      b. UNDERGROUND CONNECTIONS: WELDED CONNECTORS EXCEPT AT TEST WELLS AND AS OTHERWISE INDICATED.
      c. CONNECTIONS TO GROUND RODS AT TEST WELLS: BOLTED CONNECTORS.
      d. CONNECTIONS TO STRUCTURAL STEEL: WELDED CONNECTORS.
B. GROUNDING AT THE SERVICE
   1. EQUIPMENT GROUNDING CONDUCTORS AND GROUNDING ELECTRODE CONDUCTORS SHALL BE CONNECTED TO THE GROUND BUS. INSTALL A MAIN BONDING JUMPER BETWEEN THE NEUTRAL AND GROUND BUSES.
C. EQUIPMENT GROUNDING
   1. INSTALL INSULATED EQUIPMENT GROUNDING CONDUCTORS WITH ALL FEEDERS AND BRANCH CIRCUITS.
   2. INSTALL INSULATED EQUIPMENT GROUNDING CONDUCTORS WITH THE FOLLOWING ITEMS, IN ADDITION TO THOSE REQUIRED BY NFPA 70:
      a. FEEDERS AND BRANCH CIRCUITS.
      b. LIGHTING CIRCUITS.
      c. RECEPTACLE CIRCUITS.
      d. SINGLE-PHASE MOTOR AND APPLIANCE BRANCH CIRCUITS.
      e. THREE-PHASE MOTOR AND APPLIANCE BRANCH CIRCUITS.
      f. FLEXIBLE RACEWAY RUNS.
      g. METAL-CLAD CABLE RUNS.
      h. COMPUTER AND RACK-MOUNTED ELECTRONIC EQUIPMENT CIRCUITS: INSTALL INSULATED EQUIPMENT GROUNDING CONDUCTOR IN BRANCH-CIRCUIT RUNS FROM EQUIPMENT-AREA POWER PANELS AND POWER-DISTRIBUTION UNITS.
   3. WHERE UNGROUNDED CONDUCTORS ARE INCREASED IN SIZE FROM THE MINIMUM SIZE THAT HAS SUFFICIENT AMPACITY FOR THE INTENDED INSTALLATION, THE EQUIPMENT GROUNDING CONDUCTOR SHALL BE INCREASED PER NEC 250.122(B).
D. INSTALLATION
   1. GROUNDING CONDUCTORS: ROUTE ALONG SHORTEST AND STRAIGHTEST PATHS POSSIBLE UNLESS OTHERWISE INDICATED OR REQUIRED BY CODE. AVOID OBSTRUCTING ACCESS OR PLACING CONDUCTORS WHERE THEY MAY BE SUBJECTED TO STRAIN, IMPACT, OR DAMAGE.
   2. GROUND RODS: DRIVE RODS UNTIL TOPS ARE 6 INCHES BELOW FINISHED FLOOR OR FINAL GRADE UNLESS OTHERWISE INDICATED.
      a. INTERCONNECT GROUND RODS WITH GROUNDING ELECTRODE CONDUCTOR BELOW GRADE AND AS OTHERWISE INDICATED. MAKE CONNECTIONS WITHOUT EXPOSING STEEL OR DAMAGING COATING IF ANY.
      b. USE EXOTHERMIC WELDS FOR ALL BELOW-GRADE CONNECTIONS.
      c. FOR GROUNDING ELECTRODE SYSTEM, INSTALL AT LEAST THREE RODS SPACED AT LEAST ONE-ROD LENGTH FROM EACH OTHER AND LOCATED AT LEAST THE SAME DISTANCE FROM OTHER GROUNDING ELECTRODES, AND CONNECT TO THE SERVICE GROUNDING ELECTRODE CONDUCTOR. SYSTEM SHALL MEET REQUIREMENTS OF NEC 250.52 AND 250.53.
   3. TEST WELLS: GROUND ROD DRIVEN THROUGH DRILLED HOLE IN BOTTOM OF HANDHOLE. HANDHOLES SHALL BE AT LEAST 12 INCHES DEEP, WITH COVER.
      a. INSTALL AT LEAST ONE TEST WELL FOR EACH SERVICE UNLESS OTHERWISE INDICATED. INSTALL AT THE GROUND ROD ELECTRICALLY CLOSEST TO SERVICE ENTRANCE. SET TOP OF TEST WELL FLUSH WITH FINISHED GRADE OR FLOOR.
   4. BONDING STRAPS AND JUMPERS: INSTALL IN LOCATIONS ACCESSIBLE FOR INSPECTION AND MAINTENANCE EXCEPT WHERE ROUTED THROUGH SHORT LENGTHS OF CONDUIT.
      a. BONDING TO STRUCTURE: BOND STRAPS DIRECTLY TO BASIC STRUCTURE, TAKING CARE NOT TO PENETRATE ANY ADJACENT PARTS.
      b. BONDING TO EQUIPMENT MOUNTED ON VIBRATION ISOLATION HANGERS AND SUPPORTS: INSTALL BONDING SO VIBRATION IS NOT TRANSMITTED TO RIGIDLY MOUNTED EQUIPMENT.
      c. USE EXOTHERMIC-WELDED CONNECTORS FOR OUTDOOR LOCATIONS; IF A DISCONNECT-TYPE CONNECTION IS REQUIRED, USE A BOLTED CLAMP.
   5. GROUNDING AND BONDING FOR PIPING:
      a. METAL WATER SERVICE PIPE: INSTALL INSULATED COPPER GROUNDING CONDUCTORS, IN PVC CONDUIT OR METAL CONDUIT WHERE GROUND WIRE IS TIED TO CONDUIT, FROM BUILDING'S MAIN SERVICE EQUIPMENT, OR GROUNDING BUS, TO MAIN METAL WATER SERVICE ENTRANCES TO BUILDING. CONNECT GROUNDING CONDUCTORS TO MAIN METAL WATER SERVICE PIPES; USE A BOLTED CLAMP CONNECTOR OR BOLT A LUG-TYPE CONNECTOR TO A PIPE FLANGE BY USING ONE OF THE LUG BOLTS OF THE FLANGE. WHERE A DIELECTRIC MAIN WATER FITTING IS INSTALLED, CONNECT GROUNDING CONDUCTOR ON STREET SIDE OF FITTING. BOND METAL GROUNDING CONDUCTOR CONDUIT OR SLEEVE TO CONDUCTOR AT EACH END.
      b. WATER METER PIPING: USE BRAIDED-TYPE BONDING JUMPERS TO ELECTRICALLY BYPASS WATER METERS. CONNECT TO PIPE WITH A BOLTED CONNECTOR.
      c. BOND EACH ABOVEGROUND PORTION OF GAS PIPING SYSTEM DOWNSTREAM FROM EQUIPMENT SHUTOFF VALVE.
   6. BONDING INTERIOR METAL DUCTS: BOND METAL AIR DUCTS TO EQUIPMENT GROUNDING CONDUCTORS OF ASSOCIATED FANS, BLOWERS, ELECTRIC HEATERS, AND AIR CLEANERS. INSTALL TINNED BONDING JUMPER TO BOND ACROSS FLEXIBLE DUCT CONNECTIONS TO ACHIEVE CONTINUITY.
   7. GROUNDING FOR STEEL BUILDING STRUCTURE: INSTALL A DRIVEN GROUND ROD AT BASE OF EACH CORNER COLUMN AND AT INTERMEDIATE EXTERIOR COLUMNS AT DISTANCES NOT MORE THAN 60 FEET APART.
   8. CONNECTIONS: MAKE CONNECTIONS SO POSSIBILITY OF GALVANIC ACTION OR ELECTROLYSIS IS MINIMIZED. SELECT CONNECTORS, CONNECTION HARDWARE, CONDUCTORS, AND CONNECTION METHODS SO METALS IN DIRECT CONTACT ARE GALVANICALLY COMPATIBLE.
      a. USE ELECTROPLATED OR HOT-TIN-COATED MATERIALS TO ENSURE HIGH CONDUCTIVITY AND TO MAKE CONTACT POINTS CLOSER IN ORDER OF GALVANIC SERIES.
      b. MAKE CONNECTIONS WITH CLEAN, BARE METAL AT POINTS OF CONTACT.
      c. MAKE ALUMINUM-TO-STEEL CONNECTIONS WITH STAINLESS-STEEL SEPARATORS AND MECHANICAL CLAMPS.
      d. MAKE ALUMINUM-TO-GALVANIZED-STEEL CONNECTIONS WITH TIN-PLATED COPPER JUMPERS AND MECHANICAL CLAMPS.
      e. COAT AND SEAL CONNECTIONS HAVING DISSIMILAR METALS WITH INERT MATERIAL TO PREVENT FUTURE PENETRATION OF MOISTURE TO CONTACT SURFACES.

RACEWAYS AND BOXES FOR ELECTRICAL SYSTEMS

GENERAL

A. ACTION SUBMITTALS
   1. PRODUCT DATA: FOR SURFACE RACEWAYS, WIREWAYS AND FITTINGS, FLOOR BOXES, HINGED-COVER ENCLOSURES, AND CABINETS.

PRODUCTS

A. METAL CONDUITS AND FITTINGS
   1. METAL CONDUIT:
      a. LISTING AND LABELING: LISTED AND LABELED AS DEFINED IN NFPA 70, BY A QUALIFIED TESTING AGENCY, AND MARKED FOR INTENDED LOCATION AND APPLICATION.
      b. GRC: COMPLY WITH ANSI C80.1.
      c. IMC: COMPLY WITH ANSI C80.6.
      d. PVC-COATED STEEL CONDUIT: PVC-COATED RIGID STEEL CONDUIT IMC. COMPLY WITH NEMA RN 1.
      e. EMT: COMPLY WITH ANSI C80.3.
      f. FMC: COMPLY WITH UL 1; ZINC-COATED STEEL OR ALUMINUM.
      g. LFMC: FLEXIBLE STEEL CONDUIT WITH PVC JACKET AND COMPLYING WITH UL 360.
   2. METAL FITTINGS:
      a. COMPLY WITH NEMA FB 1 AND UL 514B.
      b. LISTING AND LABELING: LISTED AND LABELED AS DEFINED IN NFPA 70, BY A QUALIFIED TESTING AGENCY, AND MARKED FOR INTENDED LOCATION AND APPLICATION.
      c. FITTINGS, GENERAL: LISTED AND LABELED FOR TYPE OF CONDUIT, LOCATION, AND USE.
      d. CONDUIT FITTINGS FOR HAZARDOUS (CLASSIFIED) LOCATIONS: COMPLY WITH UL 1203 AND NFPA 70.
      e. FITTINGS FOR EMT: MATERIAL: STEEL OR DIE CAST. TYPE: COMPRESSION.
      f. EXPANSION FITTINGS: PVC OR STEEL TO MATCH CONDUIT TYPE, COMPLYING WITH UL 651, RATED FOR ENVIRONMENTAL CONDITIONS WHERE INSTALLED, AND INCLUDING FLEXIBLE EXTERNAL BONDING JUMPER.
      g. COATING FOR FITTINGS FOR PVC-COATED CONDUIT: MINIMUM THICKNESS OF 0.040 INCH, WITH OVERLAPPING SLEEVES PROTECTING THREADED JOINTS.
   3. JOINT COMPOUND FOR IMC, GRC, OR ARC: APPROVED, AS DEFINED IN NFPA 70, BY AUTHORITIES HAVING JURISDICTION FOR USE IN CONDUIT ASSEMBLIES, AND COMPOUNDED FOR USE TO LUBRICATE AND PROTECT THREADED CONDUIT JOINTS FROM CORROSION AND TO ENHANCE THEIR CONDUCTIVITY.
B. METAL WIREWAYS AND AUXILIARY GUTTERS
   1. DESCRIPTION: SHEET METAL, COMPLYING WITH UL 870 AND NEMA 250, TYPE 1, TYPE 3R, OR TYPE 4 UNLESS OTHERWISE INDICATED, AND SIZED ACCORDING TO NFPA 70.
      a. METAL WIREWAYS INSTALLED OUTDOORS SHALL BE LISTED AND LABELED AS DEFINED IN NFPA 70, BY A QUALIFIED TESTING AGENCY, AND MARKED FOR INTENDED LOCATION AND APPLICATION.
   2. FITTINGS AND ACCESSORIES: INCLUDE COVERS, COUPLINGS, OFFSETS, ELBOWS, EXPANSION JOINTS, ADAPTERS, HOLD-DOWN STRAPS, END CAPS, AND OTHER FITTINGS TO MATCH AND MATE WITH WIREWAYS AS REQUIRED FOR COMPLETE SYSTEM.
   3. WIREWAY COVERS: HINGED TYPE SCREW-COVER TYPE FLANGED-AND-GASKETED TYPE UNLESS OTHERWISE INDICATED.
   4. FINISH: MANUFACTURER'S STANDARD ENAMEL FINISH.
C. SURFACE RACEWAYS
   1. LISTING AND LABELING: SURFACE RACEWAYS AND TELE-POWER POLES SHALL BE LISTED AND LABELED AS DEFINED IN NFPA 70, BY A QUALIFIED TESTING AGENCY, AND MARKED FOR INTENDED LOCATION AND APPLICATION.
   2. SURFACE METAL RACEWAYS: GALVANIZED STEEL WITH SNAP-ON COVERS COMPLYING WITH UL 5. MANUFACTURER'S STANDARD ENAMEL FINISH IN COLOR SELECTED BY ARCHITECT.
D. BOXES, ENCLOSURES, AND CABINETS
   1. GENERAL REQUIREMENTS FOR BOXES, ENCLOSURES, AND CABINETS: BOXES, ENCLOSURES, AND CABINETS INSTALLED IN WET LOCATIONS SHALL BE LISTED FOR USE IN WET LOCATIONS.
   2. BOXES FOR CEILING FANS SHALL MEET NEC 314.27(C).
   3. SHEET METAL OUTLET AND DEVICE BOXES: COMPLY WITH NEMA OS 1 AND UL 514A.
   4. CAST-METAL OUTLET AND DEVICE BOXES: COMPLY WITH NEMA FB 1, FERROUS ALLOY ALUMINUM, TYPE FD, WITH GASKETED COVER.
   5. METAL FLOOR BOXES: MATERIAL: CAST METAL OR SHEET METAL. TYPE: FULLY ADJUSTABLE. SHAPE: RECTANGULAR.
   6. LUMINAIRE OUTLET BOXES: NONADJUSTABLE, DESIGNED FOR ATTACHMENT OF LUMINAIRE WEIGHING 50 LB. OUTLET BOXES DESIGNED FOR ATTACHMENT OF LUMINAIRES WEIGHING MORE THAN 50 LB SHALL BE LISTED AND MARKED FOR THE MAXIMUM ALLOWABLE WEIGHT.
   7. SMALL SHEET METAL PULL AND JUNCTION BOXES: NEMA OS 1.
   8. CAST-METAL ACCESS, PULL, AND JUNCTION BOXES: COMPLY WITH NEMA FB 1 AND UL 1773, CAST ALUMINUM OR GALVANIZED, CAST IRON WITH GASKETED COVER. PULL BOXES SHALL BE SIZED PER 314.28.
   9. BOX EXTENSIONS USED TO ACCOMMODATE NEW BUILDING FINISHES SHALL BE OF SAME MATERIAL AS RECESSED BOX.
   10. DEVICE BOX DIMENSIONS: 4 INCHES SQUARE BY 2-1/8 INCHES DEEP OR 4 INCHES BY 2-1/8 INCHES BY 2-1/8 INCHES DEEP.
   11. GANGABLE BOXES ARE PROHIBITED.
   12. HINGED-COVER ENCLOSURES: COMPLY WITH UL 50 AND NEMA 250, TYPE 1 TYPE 3R TYPE 4 WITH CONTINUOUS-HINGE COVER WITH FLUSH LATCH UNLESS OTHERWISE INDICATED.
      a. METAL ENCLOSURES: STEEL, FINISHED INSIDE AND OUT WITH MANUFACTURER'S STANDARD ENAMEL.
      b. INTERIOR PANELS: STEEL; ALL SIDES FINISHED WITH MANUFACTURER'S STANDARD ENAMEL.
   13. CABINETS:
       NEMA 250, TYPE 1 TYPE 3R TYPE 12 GALVANIZED-STEEL BOX WITH REMOVABLE INTERIOR PANEL AND REMOVABLE FRONT, FINISHED INSIDE AND OUT WITH MANUFACTURER'S STANDARD ENAMEL. HINGED DOOR IN FRONT COVER WITH FLUSH LATCH AND CONCEALED HINGE. KEY LATCH TO MATCH PANELBOARDS. METAL BARRIERS TO SEPARATE WIRING OF DIFFERENT SYSTEMS AND VOLTAGE. ACCESSORY FEET WHERE REQUIRED FOR FREESTANDING EQUIPMENT.
       NONMETALLIC CABINETS SHALL BE LISTED AND LABELED AS DEFINED IN NFPA 70, BY A QUALIFIED TESTING AGENCY, AND MARKED FOR INTENDED LOCATION AND APPLICATION.
   14. PROVIDE SUPPORT FOR ALL BOXES AND CONDUIT PER NEC TABLE 300.19.
E. HANDHOLES AND BOXES FOR EXTERIOR UNDERGROUND WIRING
   1. GENERAL REQUIREMENTS FOR HANDHOLES AND BOXES:
      a. BOXES AND HANDHOLES FOR USE IN UNDERGROUND SYSTEMS SHALL BE DESIGNED AND IDENTIFIED AS DEFINED IN NFPA 70, FOR INTENDED LOCATION AND APPLICATION.
      b. BOXES INSTALLED IN WET AREAS SHALL BE LISTED AND LABELED AS DEFINED IN NFPA 70, BY A QUALIFIED TESTING AGENCY, AND MARKED FOR INTENDED LOCATION AND APPLICATION.

EXECUTION

A. RACEWAY APPLICATION
   1. OUTDOORS: APPLY RACEWAY PRODUCTS AS SPECIFIED BELOW UNLESS OTHERWISE INDICATED:
      a. EXPOSED CONDUIT: GRC, IMC, RNC, TYPE EPC-80-PVC.
      b. CONCEALED CONDUIT, ABOVEGROUND: GRC, IMC AND EMT.
      c. UNDERGROUND CONDUIT: RNC, TYPE EPC-80-PVC, DIRECT BURIED AND CONCRETE ENCASED WHERE UNDER DRIVES AND PARKING AREAS.
      d. CONNECTION TO VIBRATING EQUIPMENT (INCLUDING TRANSFORMERS AND HYDRAULIC, PNEUMATIC, ELECTRIC SOLENOID, OR MOTOR-DRIVEN EQUIPMENT): LFMC AND LFNC.
      e. BOXES AND ENCLOSURES, ABOVEGROUND: NEMA 250, TYPE 3R AND TYPE 4 OR 4X.
   2. INDOORS: APPLY RACEWAY PRODUCTS AS SPECIFIED BELOW UNLESS OTHERWISE INDICATED:
      a. EXPOSED, NOT SUBJECT TO PHYSICAL DAMAGE: EMT.
      b. EXPOSED, NOT SUBJECT TO SEVERE PHYSICAL DAMAGE: EMT.
      c. EXPOSED AND SUBJECT TO SEVERE PHYSICAL DAMAGE: GRC. RACEWAY LOCATIONS INCLUDE THE FOLLOWING: LOADING DOCK, CORRIDORS USED FOR TRAFFIC OF MECHANIZED CARTS, FORKLIFTS, AND PALLET-HANDLING UNITS, MECHANICAL ROOMS.
      d. CONCEALED IN CEILINGS AND INTERIOR WALLS AND PARTITIONS: EMT.
      e. CONNECTION TO VIBRATING EQUIPMENT (INCLUDING TRANSFORMERS AND HYDRAULIC, PNEUMATIC, ELECTRIC SOLENOID, OR MOTOR-DRIVEN EQUIPMENT): FMC, EXCEPT USE LFMC IN DAMP OR WET LOCATIONS.
      f. DAMP OR WET LOCATIONS: GRC.
      g. BOXES AND ENCLOSURES: NEMA 250, TYPE 1, EXCEPT USE NEMA 250, TYPE 4 STAINLESS STEEL IN INSTITUTIONAL AND COMMERCIAL KITCHENS AND DAMP OR WET LOCATIONS.
   3. MINIMUM RACEWAY SIZE: 3/4-INCH TRADE SIZE.
   4. RACEWAY FITTINGS: COMPATIBLE WITH RACEWAYS AND SUITABLE FOR USE AND LOCATION.
      a. RIGID AND INTERMEDIATE STEEL CONDUIT: USE THREADED RIGID STEEL CONDUIT FITTINGS UNLESS OTHERWISE INDICATED. COMPLY WITH NEMA FB 2.10.
      b. PVC EXTERNALLY COATED, RIGID STEEL CONDUITS: USE ONLY FITTINGS LISTED FOR USE WITH THIS TYPE OF CONDUIT. PATCH AND SEAL ALL JOINTS, NICKS, AND SCRAPES IN PVC COATING AFTER INSTALLING CONDUITS AND FITTINGS. USE SEALANT RECOMMENDED BY FITTING MANUFACTURER AND APPLY IN THICKNESS AND NUMBER OF COATS RECOMMENDED BY MANUFACTURER.
      c. EMT: USE SETSCREW, STEEL FITTINGS. COMPLY WITH NEMA FB 2.10.
      d. FLEXIBLE CONDUIT: USE ONLY FITTINGS LISTED FOR USE WITH FLEXIBLE CONDUIT. COMPLY WITH NEMA FB 2.20.
   5. DO NOT INSTALL ALUMINUM CONDUITS, BOXES, OR FITTINGS IN CONTACT WITH CONCRETE OR EARTH.
   6. INSTALL SURFACE RACEWAYS ONLY WHERE INDICATED ON DRAWINGS.
B. INSTALLATION
   1. COMPLY WITH NECA 1 AND NECA 101 FOR INSTALLATION REQUIREMENTS EXCEPT WHERE REQUIREMENTS ON DRAWINGS OR IN THIS ARTICLE ARE STRICTER. COMPLY WITH NECA 102 FOR ALUMINUM CONDUITS. COMPLY WITH NFPA 70 LIMITATIONS FOR TYPES OF RACEWAYS ALLOWED IN SPECIFIC OCCUPANCIES AND NUMBER OF FLOORS.
   2. KEEP RACEWAYS AT LEAST 6 INCHES AWAY FROM PARALLEL RUNS OF FLUES AND STEAM OR HOT-WATER PIPES. INSTALL HORIZONTAL RACEWAY RUNS ABOVE WATER AND STEAM PIPING.
   3. ARRANGE STUB-UPS SO CURVED PORTIONS OF BENDS ARE NOT VISIBLE ABOVE FINISHED SLAB.
   4. INSTALL NO MORE THAN THE EQUIVALENT OF THREE 90-DEGREE BENDS IN ANY CONDUIT RUN EXCEPT FOR CONTROL WIRING CONDUITS, FOR WHICH FEWER BENDS ARE ALLOWED. SUPPORT WITHIN 12 INCHES OF CHANGES IN DIRECTION.
   5. CONCEAL CONDUIT AND EMT WITHIN FINISHED WALLS, CEILINGS, AND FLOORS UNLESS OTHERWISE INDICATED. INSTALL CONDUITS PARALLEL OR PERPENDICULAR TO BUILDING LINES.
   6. SUPPORT CONDUIT WITHIN 12 INCHES OF ENCLOSURES TO WHICH ATTACHED.
   7. ALL JUNCTION BOXES SHALL REMAIN ACCESSIBLE PER NEC REQUIREMENTS.
   8. RACEWAYS EMBEDDED IN SLABS:
      RUN CONDUIT LARGER THAN 1-INCH TRADE SIZE, PARALLEL OR AT RIGHT ANGLES TO MAIN REINFORCEMENT. WHERE AT RIGHT ANGLES TO REINFORCEMENT, PLACE CONDUIT CLOSE TO SLAB SUPPORT. SECURE RACEWAYS TO REINFORCEMENT AT MAXIMUM 10-FOOTINTERVALS. ARRANGE RACEWAYS TO CROSS BUILDING EXPANSION JOINTS AT RIGHT ANGLES WITH EXPANSION FITTINGS. ARRANGE RACEWAYS TO KEEP A MINIMUM OF 3 INCHES OF CONCRETE COVER IN ALL DIRECTIONS.
      DO NOT EMBED THREADLESS FITTINGS IN CONCRETE UNLESS SPECIFICALLY APPROVED BY ARCHITECT FOR EACH SPECIFIC LOCATIONS. SOME AUTHORITIES HAVING JURISDICTION MAY NOT PERMIT NONMETALLIC TUBING IN FIRE-RATED SLABS IN SUBPARAGRAPH BELOW. CHANGE FROM ENT TO GRC OR IMC BEFORE RISING ABOVE FLOOR.
   9. STUB-UPS TO ABOVE RECESSED CEILINGS: USE EMT, IMC, OR RMC FOR RACEWAYS.
      USE A CONDUIT BUSHING OR INSULATED FITTING TO TERMINATE STUB-UPS NOT TERMINATED IN HUBS OR IN AN ENCLOSURE.
   10. THREADED CONDUIT JOINTS, EXPOSED TO WET, DAMP, CORROSIVE, OR OUTDOOR CONDITIONS: APPLY LISTED COMPOUND TO THREADS OF RACEWAY AND FITTINGS BEFORE MAKING UP JOINTS. FOLLOW COMPOUND MANUFACTURER'S WRITTEN INSTRUCTIONS.
   11. COAT FIELD-CUT THREADS ON PVC-COATED RACEWAY WITH A CORROSION-PREVENTING CONDUCTIVE COMPOUND PRIOR TO ASSEMBLY.
   12. RACEWAY TERMINATIONS AT LOCATIONS SUBJECT TO MOISTURE OR VIBRATION: USE INSULATING BUSHINGS TO PROTECT CONDUCTORS INCLUDING CONDUCTORS SMALLER THAN NO. 4 AWG.
   13. TERMINATE THREADED CONDUITS INTO THREADED HUBS OR WITH LOCKNUTS ON INSIDE AND OUTSIDE OF BOXES OR CABINETS. INSTALL BUSHINGS ON CONDUITS UP TO 1-1/4-INCH TRADE SIZE AND INSULATED THROAT METAL BUSHINGS ON 1-1/2-INCH TRADE SIZE AND LARGER CONDUITS TERMINATED WITH LOCKNUTS. INSTALL INSULATED THROAT METAL GROUNDING BUSHINGS ON SERVICE CONDUITS.
   14. INSTALL RACEWAYS SQUARE TO THE ENCLOSURE AND TERMINATE AT ENCLOSURES WITH LOCKNUTS. INSTALL LOCKNUTS HAND TIGHT PLUS 1/4 TURN MORE.
   15. DO NOT RELY ON LOCKNUTS TO PENETRATE NONCONDUCTIVE COATINGS ON ENCLOSURES. REMOVE COATINGS IN THE LOCKNUT AREA PRIOR TO ASSEMBLING CONDUIT TO ENCLOSURE TO ASSURE A CONTINUOUS GROUND PATH.
   16. CUT CONDUIT PERPENDICULAR TO THE LENGTH. FOR CONDUITS 2-INCH TRADE SIZE AND LARGER, USE ROLL CUTTER OR A GUIDE TO MAKE CUT STRAIGHT AND PERPENDICULAR TO THE LENGTH.
   17. INSTALL PULL WIRES IN EMPTY RACEWAYS.
   18. FLEXIBLE CONDUIT CONNECTIONS: COMPLY WITH NEMA RV 3. USE A MAXIMUM OF 72 INCHES OF FLEXIBLE CONDUIT FOR EQUIPMENT SUBJECT TO VIBRATION, NOISE TRANSMISSION, OR MOVEMENT; AND FOR TRANSFORMERS AND MOTORS.
      a. USE LFMC IN DAMP OR WET LOCATIONS SUBJECT TO SEVERE PHYSICAL DAMAGE.
      b. USE LFMC OR LFNC IN DAMP OR WET LOCATIONS NOT SUBJECT TO SEVERE PHYSICAL DAMAGE.
   19. MOUNT BOXES AT HEIGHTS INDICATED ON DRAWINGS. IF MOUNTING HEIGHTS OF BOXES ARE NOT INDIVIDUALLY INDICATED, GIVE PRIORITY TO ADA REQUIREMENTS. INSTALL BOXES WITH HEIGHT MEASURED TO CENTER OF BOX UNLESS OTHERWISE INDICATED.
   20. RECESSED BOXES IN MASONRY WALLS: SAW-CUT OPENING FOR BOX IN CENTER OF CELL OF MASONRY

7/24/2025 1:06:19 PM

VILLAGE OF OAK PARK
CONSTRUCTION DOCUMENT(S)
REVIEWED FOR COMPLIANCE
KEEP A PRINTED APPROVED COPY OF THE PLANS ON SITE AT ALL TIMES FOR CONTRACTORS AND INSPECTORS
- Signage is required to provide the address, contractor name and emergency contact information
- Before you dig call J.U.L.I.E @ 811
- Construction hours are 7:00AM through 6:00PM all seven days a week
- Address numbers shall be posted in the front and in the alley of the site (if applicable)
- Trees shall be protected in the parkways; do not block sidewalks or alleyways
- Portable toilets shall be properly maintained a minimum of 10' from the lot line
- Construction fencing shall secure the site and materials(6' high for res. & 8' high for comm. sites)
- Respect the neighboring properties; do not trespass on or damage neighboring properties
- Keep the site clean, safe, organized and free from debris.
- Maintain all guardrails, walkways, ladders and stairs in a safe condition

Any and all changes and/or deviations to the approved plans shall be proposed in writing, in triplicate, for a complete re-review and re-approval.

625 W Adams Street – 19th Floor
Chicago, IL 60661
312.320.3668

LICENSED PROFESSIONAL ENGINEER
ALEXANDER G. RADKOFF
062-073334
OF ILLINOIS
AGR - 08.22.2025

DESIGN FIRM LIC. NO: 184008703-002
DESIGN FIRM LIC. NO. EXP.: 04.30.2027
ILLINOIS LICENCE NUMBER: 062.073334
LIC. EXP.: 11.30. 2025

--
SIDEWALK VAULT ALTERATIONS

1144 W LAKE ST
OAK PARK, IL 60301

NO.	DESCRIPTION	DATE
1 (revision triangle)	PERMIT REVISION 1	08/22/2025
1	ISSUED FOR PERMIT	07/28/2025

JOB NO.: 25.068

1 (revision triangle)

SCALE:

TITLE: ELECTRICAL SPECIFICATIONS

SHEET: E0.2

BLOCK, AND INSTALL BOX FLUSH WITH SURFACE OF WALL. PREPARE BLOCK SURFACES TO PROVIDE A FLAT SURFACE FOR A RAINTIGHT CONNECTION BETWEEN BOX AND COVER PLATE OR SUPPORTED EQUIPMENT AND BOX.

21. HORIZONTALLY SEPARATE BOXES MOUNTED ON OPPOSITE SIDES OF WALLS SO THEY ARE NOT IN THE SAME VERTICAL CHANNEL.
22. LOCATE BOXES SO THAT COVER OR PLATE WILL NOT SPAN DIFFERENT BUILDING FINISHES.
23. SUPPORT BOXES OF THREE GANGS OR MORE FROM MORE THAN ONE SIDE BY SPANNING TWO FRAMING MEMBERS OR MOUNTING ON BRACKETS SPECIFICALLY DESIGNED FOR THE PURPOSE.
24. FASTEN JUNCTION AND PULL BOXES TO OR SUPPORT FROM BUILDING STRUCTURE. DO NOT SUPPORT BOXES BY CONDUI

PANELBOARDS

GENERAL

A. SUBMITTALS
   1. PRODUCT DATA: FOR EACH TYPE OF PANELBOARD.
      a. INCLUDE MATERIALS, SWITCHING AND OVERCURRENT PROTECTIVE DEVICES, SPDS, ACCESSORIES, AND COMPONENTS INDICATED.
      b. INCLUDE DIMENSIONS AND MANUFACTURERS' TECHNICAL DATA ON FEATURES, PERFORMANCE, ELECTRICAL CHARACTERISTICS, RATINGS, AND FINISHES.
      c. PANELBOARD SCHEDULES: FOR INSTALLATION IN PANELBOARDS. SUBMIT FINAL VERSIONS AFTER LOAD BALANCING.

B. MAINTENANCE MATERIAL SUBMITTALS
   1. FURNISH EXTRA MATERIALS THAT MATCH PRODUCTS INSTALLED AND THAT ARE PACKAGED WITH PROTECTIVE COVERING FOR STORAGE AND IDENTIFIED WITH LABELS DESCRIBING CONTENTS.
      a. KEYS: TWO SPARES FOR EACH TYPE OF PANELBOARD CABINET LOCK.
      b. CIRCUIT BREAKERS INCLUDING GFCI AND GFEP TYPES: TWO SPARES FOR EACH PANELBOARD.
      c. FUSES FOR FUSED SWITCHES: EQUAL TO 10 PERCENT OF QUANTITY INSTALLED FOR EACH SIZE AND TYPE, BUT NO FEWER THAN THREE OF EACH SIZE AND TYPE.
      d. FUSES FOR FUSED POWER-CIRCUIT DEVICES: EQUAL TO 10 PERCENT OF QUANTITY INSTALLED FOR EACH SIZE AND TYPE, BUT NO FEWER THAN THREE OF EACH SIZE AND TYPE.

PRODUCTS

A. PANELBOARDS COMMON REQUIREMENTS
   1. ENCLOSURES: FLUSH AND SURFACE-MOUNTED, DEAD-FRONT CABINETS.
      a. RATED FOR ENVIRONMENTAL CONDITIONS AT INSTALLED LOCATION.
         - INDOOR DRY AND CLEAN LOCATIONS: NEMA 250, TYPE 1.
         - OUTDOOR LOCATIONS: NEMA 250, TYPE 3R.
         - KITCHEN WASH-DOWN AREAS: NEMA 250, TYPE 4X, STAINLESS STEEL.
         - OTHER WET OR DAMP INDOOR LOCATIONS: NEMA 250, TYPE 4.
         - INDOOR LOCATIONS SUBJECT TO DUST, FALLING DIRT, AND DRIPPING NONCORROSIVE LIQUIDS: NEMA 250, TYPE 5 OR TYPE 12.
      b. HEIGHT: 84 INCHES MAXIMUM.
      c. FRONT: SECURED TO BOX WITH CONCEALED TRIM CLAMPS. FOR SURFACE-MOUNTED FRONTS, MATCH BOX DIMENSIONS; FOR FLUSH-MOUNTED FRONTS, OVERLAP BOX. TRIMS SHALL COVER ALL LIVE PARTS AND SHALL HAVE NO EXPOSED HARDWARE.
      d. HINGED FRONT COVER: ENTIRE FRONT TRIM HINGED TO BOX AND WITH STANDARD DOOR WITHIN HINGED TRIM COVER. TRIMS SHALL COVER ALL LIVE PARTS AND SHALL HAVE NO EXPOSED HARDWARE.
      e. SKIRT FOR SURFACE-MOUNTED PANELBOARDS: SAME GAGE AND FINISH AS PANELBOARD FRONT WITH FLANGES FOR ATTACHMENT TO PANELBOARD, WALL, AND CEILING OR FLOOR.
   2. INCOMING MAINS SHALL BE CONVERTIBLE BETWEEN TOP AND BOTTOM. MAIN LUG INTERIORS UP TO 400 AMPERES SHALL BE FIELD CONVERTIBLE TO MAIN BREAKER.
   3. PHASE, NEUTRAL, AND GROUND BUSES:
      a. MATERIAL: HARD-DRAWN COPPER, 98 PERCENT CONDUCTIVITY. PLATING SHALL RUN ENTIRE LENGTH OF BUS. BUS SHALL BE FULLY RATED THE ENTIRE LENGTH.
      b. INTERIORS SHALL BE FACTORY ASSEMBLED INTO A UNIT. REPLACING SWITCHING AND PROTECTIVE DEVICES SHALL NOT DISTURB ADJACENT UNITS OR REQUIRE REMOVING THE MAIN BUS CONNECTORS.
      c. EQUIPMENT GROUND BUS: ADEQUATE FOR FEEDER AND BRANCH-CIRCUIT EQUIPMENT GROUNDING CONDUCTORS; BONDED TO BOX.
   4. CONDUCTOR CONNECTORS: SUITABLE FOR USE WITH CONDUCTOR MATERIAL AND SIZES.
      a. MATERIAL: HARD-DRAWN COPPER, 98 PERCENT CONDUCTIVITY.
      b. TERMINATIONS SHALL ALLOW USE OF 75 DEG C RATED CONDUCTORS WITHOUT DERATING.
      c. SIZE: LUGS SUITABLE FOR INDICATED CONDUCTOR SIZES, WITH ADDITIONAL GUTTER SPACE, IF REQUIRED, FOR LARGER CONDUCTORS.
      d. MAIN AND NEUTRAL LUGS: MECHANICAL TYPE, WITH A LUG ON THE NEUTRAL BAR FOR EACH POLE IN THE PANELBOARD.
      e. GROUND LUGS AND BUS-CONFIGURED TERMINATORS: MECHANICAL TYPE, WITH A LUG ON THE BAR FOR EACH POLE IN THE PANELBOARD.
      f. FEED-THROUGH LUGS: MECHANICAL TYPE, SUITABLE FOR USE WITH CONDUCTOR MATERIAL. LOCATE AT OPPOSITE END OF BUS FROM INCOMING LUGS OR MAIN DEVICE.
      g. SUBFEED (DOUBLE) LUGS: MECHANICAL TYPE SUITABLE FOR USE WITH CONDUCTOR MATERIAL. LOCATE AT SAME END OF BUS AS INCOMING LUGS OR MAIN DEVICE.
      h. GUTTER-TAP LUGS: MECHANICAL TYPE SUITABLE FOR USE WITH CONDUCTOR MATERIAL AND WITH MATCHING INSULATING COVERS. LOCATE AT SAME END OF BUS AS INCOMING LUGS OR MAIN DEVICE.
   5. FUTURE DEVICES: PANELBOARDS SHALL HAVE MOUNTING BRACKETS, BUS CONNECTIONS, FILLER PLATES, AND NECESSARY APPURTENANCES REQUIRED FOR FUTURE INSTALLATION OF DEVICES.
   6. PANELBOARD SHORT-CIRCUIT CURRENT RATING: FULLY RATED TO INTERRUPT SYMMETRICAL SHORT-CIRCUIT CURRENT AVAILABLE AT TERMINALS. ASSEMBLY LISTED BY AN NRTL FOR 100 PERCENT INTERRUPTING CAPACITY.
   7. SURGE SUPPRESSION: FACTORY INSTALLED AS AN INTEGRAL PART OF INDICATED PANELBOARDS, COMPLYING WITH UL 1449 SPD TYPE 1 AT SERVICE AND TYPE 2 FOR ADDITIONAL ELECTRICAL INSTALLATIONS. ALL INSTALLATIONS SHALL COMPLY WITH NEC 285 REQUIREMENTS.
      a. PEAK SURGE CURRENT RATING: THE MINIMUM SINGLE-PULSE SURGE CURRENT WITHSTAND RATING PER PHASE SHALL NOT BE LESS THAN 100 KA. THE PEAK SURGE CURRENT RATING SHALL BE THE ARITHMETIC SUM OF THE RATINGS OF THE INDIVIDUAL MOVS IN A GIVEN MODE.
      b. PROTECTION MODES AND UL 1449 VPR FOR GROUNDED WYE CIRCUITS WITH 480Y/277 V OR 208Y/120 V, THREE-PHASE, FOUR-WIRE CIRCUITS SHALL NOT EXCEED THE FOLLOWING:
         - LINE TO NEUTRAL: 1200 V FOR 480Y/277 V, 700 V FOR 208Y/120 V.
         - LINE TO GROUND: 1200 V FOR 480Y/277 V, 700 V FOR 208Y/120 V.
         - NEUTRAL TO GROUND: 1200 V FOR 480Y/277 V, 700 V FOR 208Y/120 V.
         - LINE TO LINE: 2000 V FOR 480Y/277 V, 1200 V FOR 208Y/120 V.
      c. PROTECTION MODES AND UL 1449 VPR FOR 240/120-V, SINGLE-PHASE, THREE-WIRE CIRCUITS SHALL NOT EXCEED THE FOLLOWING:
         - LINE TO NEUTRAL: 700 V.
         - LINE TO GROUND: 700 V.
         - NEUTRAL TO GROUND: 700 V.
         - LINE TO LINE: 1200 V.
      d. SCCR: EQUAL TO THE SCCR OF THE PANELBOARD IN WHICH INSTALLED

B. DISTRIBUTION PANELBOARDS. POWER PANELBOARDS, AS SPECIFIED IN THIS ARTICLE, FALL UNDER REQUIREMENTS OF "DISTRIBUTION PANELBOARDS" IN NEMA PB 1.
   1. MANUFACTURERS: SUBJECT TO COMPLIANCE WITH REQUIREMENTS, PROVIDE PRODUCTS BY ONE OF THE FOLLOWING: EATON, SQUARE D, OR GE.
   2. PANELBOARDS: NEMA PB 1, DISTRIBUTION TYPE.
   3. DOORS: SECURED WITH VAULT-TYPE LATCH WITH TUMBLER LOCK; KEYED ALIKE.
   4. MAINS: CIRCUIT BREAKER OR LUGS ONLY. REFER TO SINGLE LINE DRAWING.
   5. BRANCH OVERCURRENT PROTECTIVE DEVICES: BOLT-ON CIRCUIT BREAKERS.

C. LIGHTING AND APPLIANCE BRANCH-CIRCUIT PANELBOARDS PANELBOARDS, AS SPECIFIED IN THIS ARTICLE, COMPLY WITH REQUIREMENTS OF "LIGHTING AND APPLIANCE BRANCH-CIRCUIT PANELBOARDS" IN NEMA PB 1.
   1. MANUFACTURERS: SUBJECT TO COMPLIANCE WITH REQUIREMENTS, PROVIDE PRODUCTS BY ONE OF THE FOLLOWING: EATON, SQUARE D, OR GE.
   2. PANELBOARDS: NEMA PB 1, LIGHTING AND APPLIANCE BRANCH-CIRCUIT TYPE.
   3. MAINS: CIRCUIT BREAKER OR LUGS ONLY. REFER TO SINGLE LINE DRAWING.
   4. BRANCH OVERCURRENT PROTECTIVE DEVICES: BOLT-ON CIRCUIT BREAKERS, REPLACEABLE WITHOUT DISTURBING ADJACENT UNITS.
   5. DOORS: DOOR-IN-DOOR CONSTRUCTION WITH CONCEALED HINGES; SECURED WITH MULTIPOINT LATCH WITH TUMBLER LOCK; KEYED ALIKE. OUTER DOOR SHALL PERMIT FULL ACCESS TO THE PANEL INTERIOR. INNER DOOR SHALL PERMIT ACCESS TO BREAKER OPERATING HANDLES AND LABELING, BUT CURRENT CARRYING TERMINALS AND BUS SHALL REMAIN CONCEALED.
   6. PANELS KNOWN AS LOADCENTERS ARE NOT ACCEPTABLE.

D. IDENTIFICATION
   1. PANELBOARD LABEL: MANUFACTURER'S NAME AND TRADEMARK, VOLTAGE, AMPERAGE, NUMBER OF PHASES, AND NUMBER OF POLES SHALL BE LOCATED ON THE INTERIOR OF THE PANELBOARD DOOR.
   2. BREAKER LABELS: FACEPLATE SHALL LIST CURRENT RATING, UL AND IEC CERTIFICATION STANDARDS, AND AIC RATING.
   3. CIRCUIT DIRECTORY: DIRECTORY CARD INSIDE PANELBOARD DOOR, MOUNTED IN METAL FRAME WITH TRANSPARENT PROTECTIVE COVER.
      a. CIRCUIT DIRECTORY SHALL IDENTIFY SPECIFIC PURPOSE WITH DETAIL SUFFICIENT TO DISTINGUISH IT FROM ALL OTHER CIRCUITS.

EXECUTION

A. INSTALLATION
   1. COORDINATE LAYOUT AND INSTALLATION OF PANELBOARDS AND COMPONENTS WITH OTHER CONSTRUCTION THAT PENETRATES WALLS OR IS SUPPORTED BY THEM, INCLUDING ELECTRICAL AND OTHER TYPES OF EQUIPMENT, RACEWAYS, PIPING, ENCUMBRANCES TO WORKSPACE CLEARANCE REQUIREMENTS, AND ADJACENT SURFACES. MAINTAIN REQUIRED WORKSPACE CLEARANCES AND REQUIRED CLEARANCES FOR EQUIPMENT ACCESS DOORS AND PANELS.
   2. COMPLY WITH NECA 1. INSTALL PANELBOARDS AND ACCESSORIES ACCORDING TO NECA 407 AND NEMA PB 1.1.
   3. MOUNT TOP OF TRIM 90 INCHES ABOVE FINISHED FLOOR UNLESS OTHERWISE INDICATED.
   4. MAINTAIN ALL CLEARANCES ABOVE, BELOW, AND IN FRONT OF PANEL AS REQUIRED BY NEC 110.

WIRING DEVICES

GENERAL

A. SUBMITTALS
   1. PRODUCT DATA: FOR EACH TYPE OF PRODUCT.

PRODUCTS

A. GENERAL WIRING-DEVICE REQUIREMENTS
   1. WIRING DEVICES, COMPONENTS, AND ACCESSORIES: LISTED AND LABELED AS DEFINED IN NFPA 70, BY A QUALIFIED TESTING AGENCY, AND MARKED FOR INTENDED LOCATION AND APPLICATION.
   2. DEVICES THAT ARE MANUFACTURED FOR USE WITH MODULAR PLUG-IN CONNECTORS MAY BE SUBSTITUTED UNDER THE FOLLOWING CONDITIONS:
   3. CONNECTORS SHALL COMPLY WITH UL 2459 AND SHALL BE MADE WITH STRANDING BUILDING WIRE.
   4. DEVICES SHALL COMPLY WITH THE REQUIREMENTS IN THIS SECTION.
   5. DEVICES FOR OWNER-FURNISHED EQUIPMENT: RECEPTACLES: MATCH PLUG CONFIGURATIONS. CORD AND PLUG SETS: MATCH EQUIPMENT REQUIREMENTS.
   6. SOURCE LIMITATIONS: OBTAIN EACH TYPE OF WIRING DEVICE AND ASSOCIATED WALL PLATE FROM SINGLE SOURCE FROM SINGLE MANUFACTURER. ACCEPTABLE MANUFACTURERS ARE EATON, HUBBELL, PASS & SEYMOUR, AND LEVITON, UNLESS OTHERWISE NOTED.

B. STRAIGHT-BLADE RECEPTACLES
   1. DUPLEX CONVENIENCE RECEPTACLES: 125 V, 20 A; COMPLY WITH NEMA WD 1, NEMA WD 6 CONFIGURATION 5-20R, UL 498, AND FS W-C-596.
   2. ISOLATED-GROUND, DUPLEX CONVENIENCE RECEPTACLES: 125 V, 20 A; COMPLY WITH NEMA WD 1, NEMA WD 6 CONFIGURATION 5-20R, UL 498, AND FS W-C-596.
      a. DESCRIPTION: STRAIGHT BLADE; EQUIPMENT GROUNDING CONTACTS SHALL BE CONNECTED ONLY TO THE GREEN GROUNDING SCREW TERMINAL OF THE DEVICE AND WITH INHERENT ELECTRICAL ISOLATION FROM MOUNTING STRAP. ISOLATION SHALL BE INTEGRAL TO RECEPTACLE CONSTRUCTION AND NOT DEPENDENT ON REMOVABLE PARTS.

C. USB CHARGER DEVICES
   1. TAMPER-RESISTANT, USB CHARGER RECEPTACLES: 12 V DC, 2.0 A, USB DUAL TYPE A; COMPLY WITH NEMA WD 1, NEMA WD 6 CONFIGURATION 5-20R, UL 498, UL 1310, AND FS W-C-596.
      a. DESCRIPTION: SINGLE-PIECE, RIVETLESS, NICKEL-PLATED, ALL-BRASS GROUNDING SYSTEM. NICKEL-PLATED, BRASS MOUNTING STRAP.

D. GFCI RECEPTACLES
   1. DUPLEX RECEPTACLE, 125 V, 20 A, STRAIGHT BLADE, NON-FEED-THROUGH TYPE.
      COMPLY WITH NEMA WD 1, NEMA WD 6 CONFIGURATION 5-20R, UL 498, UL 943 CLASS A, AND FS W-C-596.
      INCLUDE INDICATOR LIGHT THAT SHOWS WHEN THE GFCI HAS MALFUNCTIONED AND NO LONGER PROVIDES PROPER GFCI PROTECTION.

E. TWIST-LOCKING RECEPTACLES
   1. TWIST-LOCK, SINGLE CONVENIENCE RECEPTACLES: 125 V, 20 A; COMPLY WITH NEMA WD 1, NEMA WD 6 CONFIGURATION L5-20R, AND UL 498.

F. SPECIALTY AND CONTROLLED RECEPTACLES
   1. REFER TO DRAWING FOR NEMA CONFIGURATION OF ALL SPECIALTY RECEPTACLES.
   2. CONTROLLED RECEPTACLES SHALL BE SPLIT CONTROLLED (UNLESS OTHERWISE NOTED ON DRAWINGS.) ALL MARKINGS FOR CONTROL SHALL MEET NEC 406.3 AND BE UL498B LISTED. RATING SHALL BE 20A UNLESS OTHERWISE NOTED ON DRAWINGS.

G. PENDANT CORD-CONNECTOR DEVICES
   1. DESCRIPTION:
      a. MATCHING, LOCKING-TYPE PLUG AND RECEPTACLE BODY CONNECTOR.
      b. NEMA WD 6 CONFIGURATIONS L5-20P AND L5-20R, HEAVY-DUTY GRADE, AND FS W-C-596.
      c. BODY: NYLON, WITH SCREW-OPEN, CABLE-GRIPPING JAWS AND PROVISION FOR ATTACHING EXTERNAL CABLE GRIP.
      d. EXTERNAL CABLE GRIP: WOVEN WIRE-MESH TYPE MADE OF HIGH-STRENGTH, GALVANIZED-STEEL WIRE STRAND, MATCHED TO CABLE DIAMETER, AND WITH ATTACHMENT PROVISION DESIGNED FOR CORRESPONDING CONNECTOR.

H. CORD AND PLUG SETS
   1. DESCRIPTION:
      a. MATCH VOLTAGE AND CURRENT RATINGS AND NUMBER OF CONDUCTORS TO REQUIREMENTS OF EQUIPMENT BEING CONNECTED.
      b. CORD: RUBBER-INSULATED, STRANDED-COPPER CONDUCTORS, WITH TYPE SOW-A JACKET; WITH GREEN-INSULATED GROUNDING CONDUCTOR AND AMPACITY OF AT LEAST 130 PERCENT OF THE EQUIPMENT RATING.
      c. PLUG: NYLON BODY AND INTEGRAL CABLE-CLAMPING JAWS. MATCH CORD AND RECEPTACLE TYPE FOR CONNECTION.

I. TOGGLE SWITCHES
   1. COMPLY WITH NEMA WD 1, UL 20, AND FS W-S-896.
   2. SWITCHES, 120/277 V, 20 A:
   3. PILOT-LIGHT SWITCHES: 120/277 V, 20 A.
      a. DESCRIPTION: SINGLE POLE, WITH LED-LIGHTED HANDLE, ILLUMINATED WHEN SWITCH IS OFF.
      b. KEY-OPERATED SWITCHES: 120/277 V, 20 A.
      c. `DESCRIPTION: SINGLE POLE, WITH FACTORY-SUPPLIED KEY IN LIEU OF SWITCH HANDLE.

J. WALL SWITCH SENSOR LIGHT SWITCH, DUAL TECHNOLOGY
   1. DESCRIPTION: SWITCHBOX-MOUNTED, COMBINATION LIGHTING-CONTROL SENSOR AND CONVENTIONAL SWITCH LIGHTING-CONTROL UNIT USING DUAL TECHNOLOGY. ADJUSTABLE TIME DELAY OF 20 MINUTES. ABLE TO BE LOCKED TO AUTOMATIC-ON OR MANUAL-ON MODE. COMPLY WITH NEMA WD 1, UL 20, AND FS W-S-896.

K. WALL-BOX DIMMERS
   1. DESCRIPTION: MODULAR, FULL-WAVE, SOLID-STATE DIMMER SWITCH WITH INTEGRAL, QUIET ON-OFF SWITCHES, WITH AUDIBLE FREQUENCY AND EMI/RFI SUPPRESSION FILTERS.
   2. CONTROL: CONTINUOUSLY ADJUSTABLE SLIDER WITH SINGLE-POLE OR THREE-WAY SWITCHING.
   3. STANDARDS: COMPLY WITH UL 1472.
   4. INCANDESCENT LAMP DIMMERS: 120 V; CONTROL SHALL FOLLOW SQUARE-LAW DIMMING CURVE. ON-OFF SWITCH POSITIONS SHALL BYPASS DIMMER MODULE.
   5. LED LAMP DIMMER SWITCHES: MODULAR; COMPATIBLE WITH LED LAMPS; TRIM POTENTIOMETER TO ADJUST LOW-END DIMMING; CAPABLE OF CONSISTENT DIMMING WITH LOW END NOT GREATER THAN 20 PERCENT OF FULL BRIGHTNESS.

L. WALL PLATES
   1. SINGLE AND COMBINATION TYPES SHALL MATCH CORRESPONDING WIRING DEVICES.
   2. PLATE-SECURING SCREWS: METAL WITH HEAD COLOR TO MATCH PLATE FINISH.
   3. MATERIAL FOR FINISHED SPACES: SMOOTH, HIGH-IMPACT THERMOPLASTIC.
   4. MATERIAL FOR UNFINISHED SPACES: SMOOTH, HIGH-IMPACT THERMOPLASTIC.
   5. MATERIAL FOR DAMP LOCATIONS: THERMOPLASTIC WITH SPRING-LOADED LIFT COVER, AND LISTED AND LABELED FOR USE IN WET AND DAMP LOCATIONS.
   6. WET-LOCATION, WEATHERPROOF COVER PLATES: NEMA 250, COMPLYING WITH TYPE 3R, WEATHER-RESISTANT THERMOPLASTIC WITH LOCKABLE COVER.

M. FLOOR SERVICE FITTINGS
   1. TYPE: MODULAR, DUAL-SERVICE UNITS SUITABLE FOR WIRING METHOD USED. TYPE AS INDICATED ON DRAWINGS.
   2. COMPARTMENTS: BARRIER SEPARATES POWER FROM VOICE AND DATA COMMUNICATION CABLING.
   3. SERVICE PLATE: AS INDICATED BY ARCHITECT WITH SATIN FINISH.
   4. POWER RECEPTACLE: NEMA WD 6 CONFIGURATION 5-20R, GRAY FINISH, UNLESS OTHERWISE INDICATED.
   5. DATA COMMUNICATION OUTLET: AS DIRECTED BY THE OWNER.

N. POKE-THROUGH ASSEMBLIES
   1. DESCRIPTION:
      a. FACTORY-FABRICATED AND -WIRED ASSEMBLY OF BELOW-FLOOR JUNCTION BOX WITH MULTICHANNELED, THROUGH-FLOOR RACEWAY/FIRESTOP UNIT AND DETACHABLE MATCHING FLOOR SERVICE-OUTLET ASSEMBLY.
      b. COMPLY WITH UL 514 SCRUB WATER EXCLUSION REQUIREMENTS.
      c. SERVICE-OUTLET ASSEMBLY: TYPE AS INDICATED ON DRAWINGS.
      d. SIZE: SELECTED TO FIT NOMINAL CORED HOLES IN FLOOR AND MATCHED TO FLOOR THICKNESS.
      e. FIRE RATING: UNIT IS LISTED AND LABELED FOR FIRE RATING OF FLOOR-CEILING ASSEMBLY.
      f. CLOSURE PLUG: ARRANGED TO CLOSE UNUSED CORED OPENINGS AND REESTABLISH FIRE RATING OF FLOOR.

O. FINISHES
   1. DEVICE COLOR:
      a. WIRING DEVICES CONNECTED TO NORMAL POWER SYSTEM: AS SELECTED BY ARCHITECT UNLESS OTHERWISE INDICATED OR REQUIRED BY NFPA 70 OR DEVICE LISTING.
      b. WIRING DEVICES CONNECTED TO EMERGENCY POWER SYSTEM: RED
      c. ISOLATED-GROUND RECEPTACLES: AS SPECIFIED ABOVE, WITH ORANGE TRIANGLE ON FACE.
   2. WALL PLATE COLOR: FOR PLASTIC COVERS, MATCH DEVICE COLOR.

EXECUTION

A. INSTALLATION
   1. COMPLY WITH NECA 1, INCLUDING MOUNTING HEIGHTS LISTED IN THAT STANDARD, UNLESS OTHERWISE INDICATED.
   2. COORDINATION WITH OTHER TRADES:
      a. PROTECT INSTALLED DEVICES AND THEIR BOXES. DO NOT PLACE WALL FINISH MATERIALS OVER DEVICE BOXES AND DO NOT CUT HOLES FOR BOXES WITH ROUTERS THAT ARE GUIDED BY RIDING AGAINST OUTSIDE OF BOXES.
      b. KEEP OUTLET BOXES FREE OF PLASTER, DRYWALL JOINT COMPOUND, MORTAR, CEMENT, CONCRETE, DUST, PAINT, AND OTHER MATERIAL THAT MAY CONTAMINATE THE RACEWAY SYSTEM, CONDUCTORS, AND CABLES.
      c. INSTALL DEVICE BOXES IN BRICK OR BLOCK WALLS SO THAT THE COVER PLATE DOES NOT CROSS A JOINT UNLESS THE JOINT IS TROWELED FLUSH WITH THE FACE OF THE WALL.
      d. INSTALL WIRING DEVICES AFTER ALL WALL PREPARATION, INCLUDING PAINTING, IS COMPLETE.
   3. CONDUCTORS:
      a. DO NOT STRIP INSULATION FROM CONDUCTORS UNTIL RIGHT BEFORE THEY ARE SPLICED OR TERMINATED ON DEVICES.
      b. STRIP INSULATION EVENLY AROUND THE CONDUCTOR USING TOOLS DESIGNED FOR THE PURPOSE. AVOID SCORING OR NICKING OF SOLID WIRE OR CUTTING STRANDS FROM STRANDED WIRE.
      c. THE LENGTH OF FREE CONDUCTORS AT OUTLETS FOR DEVICES SHALL MEET PROVISIONS OF NFPA 70, ARTICLE 300, WITHOUT PIGTAILS.
   4. EXISTING CONDUCTORS:
      a. CUT BACK AND PIGTAIL, OR REPLACE ALL DAMAGED CONDUCTORS.
      b. STRAIGHTEN CONDUCTORS THAT REMAIN AND REMOVE CORROSION AND FOREIGN MATTER.
      c. PIGTAILING EXISTING CONDUCTORS IS PERMITTED, PROVIDED THE OUTLET BOX IS LARGE ENOUGH.
   5. DEVICE INSTALLATION:
      a. REPLACE DEVICES THAT HAVE BEEN IN TEMPORARY USE DURING CONSTRUCTION AND THAT WERE INSTALLED BEFORE BUILDING FINISHING OPERATIONS WERE COMPLETE.
      b. KEEP EACH WIRING DEVICE IN ITS PACKAGE OR OTHERWISE PROTECTED UNTIL IT IS TIME TO CONNECT CONDUCTORS.
      c. DO NOT REMOVE SURFACE PROTECTION, SUCH AS PLASTIC FILM AND SMUDGE COVERS, UNTIL THE LAST POSSIBLE MOMENT.
      d. CONNECT DEVICES TO BRANCH CIRCUITS USING PIGTAILS THAT ARE NOT LESS THAN 6 INCHES (152 MM) IN LENGTH.
      e. WHEN THERE IS A CHOICE, USE SIDE WIRING WITH BINDING-HEAD SCREW TERMINALS. WRAP SOLID CONDUCTOR TIGHTLY CLOCKWISE, TWO-THIRDS TO THREE-FOURTHS OF THE WAY AROUND TERMINAL SCREW.
      f. USE A TORQUE SCREWDRIVER WHEN A TORQUE IS RECOMMENDED OR REQUIRED BY MANUFACTURER.
      g. WHEN CONDUCTORS LARGER THAN NO. 12 AWG ARE INSTALLED ON 15- OR 20-A CIRCUITS, SPLICE NO. 12 AWG PIGTAILS FOR DEVICE CONNECTIONS.
      h. TIGHTEN UNUSED TERMINAL SCREWS ON THE DEVICE.
      i. WHEN MOUNTING INTO METAL BOXES, REMOVE THE FIBER OR PLASTIC WASHERS USED TO HOLD DEVICE-MOUNTING SCREWS IN YOKES, ALLOWING METAL-TO-METAL CONTACT.
   6. RECEPTACLE ORIENTATION:
      a. INSTALL GROUND PIN OF VERTICALLY MOUNTED RECEPTACLES UP, AND ON HORIZONTALLY MOUNTED RECEPTACLES TO THE RIGHT.
   7. ALL RECEPTACLES AND LIGHT SWITCHES IN PLENUM SPACES OR ROOMS SHALL BE IN A METAL ENCLOSURE PER NEC 300.22 (C)(3).
   8. DEVICE PLATES: DO NOT USE OVERSIZED OR EXTRA-DEEP PLATES. REPAIR WALL FINISHES AND REMOUNT OUTLET BOXES WHEN STANDARD DEVICE PLATES DO NOT FIT FLUSH OR DO NOT COVER ROUGH WALL OPENING.
   9. ARRANGEMENT OF DEVICES: UNLESS OTHERWISE INDICATED, MOUNT FLUSH, WITH LONG DIMENSION VERTICAL AND WITH GROUNDING TERMINAL OF RECEPTACLES ON TOP. GROUP ADJACENT SWITCHES UNDER SINGLE, MULTIGANG WALL PLATES.
   10. ADJUST LOCATIONS OF FLOOR SERVICE OUTLETS AND SERVICE POLES TO SUIT ARRANGEMENT OF PARTITIONS AND FURNISHINGS.

B. IDENTIFICATION
   1. IDENTIFY EACH RECEPTACLE WITH PANELBOARD IDENTIFICATION AND CIRCUIT NUMBER. USE HOT, STAMPED, OR ENGRAVED MACHINE PRINTING WITH BLACK-FILLED LETTERING ON FACE OF PLATE, AND DURABLE WIRE MARKERS OR TAGS INSIDE OUTLET BOXES.

FUSES

GENERAL

A. SUBMITTALS
   1. PRODUCT DATA: FOR EACH TYPE OF PRODUCT. INCLUDE CONSTRUCTION DETAILS, MATERIAL DESCRIPTIONS, DIMENSIONS OF INDIVIDUAL COMPONENTS AND PROFILES, AND FINISHES FOR SPARE-FUSE CABINETS.

B. MAINTENANCE MATERIAL SUBMITTALS
   1. FURNISH EXTRA MATERIALS THAT MATCH PRODUCTS INSTALLED AND THAT ARE PACKAGED WITH PROTECTIVE COVERING FOR STORAGE AND IDENTIFIED WITH LABELS DESCRIBING CONTENTS.
      a. FUSES: EQUAL TO 10 PERCENT OF QUANTITY INSTALLED FOR EACH SIZE AND TYPE, BUT NO FEWER THAN THREE OF EACH SIZE AND TYPE.

PRODUCTS

A. MANUFACTURERS
   1. SOURCE LIMITATIONS: OBTAIN FUSES, FOR USE WITHIN A SPECIFIC PRODUCT OR CIRCUIT, FROM SINGLE SOURCE FROM SINGLE MANUFACTURER.

B. CARTRIDGE FUSES
   1. CHARACTERISTICS: NEMA FU 1, CURRENT-LIMITING, NONRENEWABLE CARTRIDGE FUSES WITH VOLTAGE RATINGS CONSISTENT WITH CIRCUIT VOLTAGES.
   2. ELECTRICAL COMPONENTS, DEVICES, AND ACCESSORIES: LISTED AND LABELED AS DEFINED IN NFPA 70, BY A QUALIFIED TESTING AGENCY, AND MARKED FOR INTENDED LOCATION AND APPLICATION.
   3. COMPLY WITH NEMA FU 1 FOR CARTRIDGE FUSES.
   4. COORDINATE FUSE RATINGS WITH UTILIZATION EQUIPMENT NAMEPLATE LIMITATIONS OF MAXIMUM FUSE SIZE AND WITH SYSTEM SHORT-CIRCUIT CURRENT LEVELS.

C. SPARE-FUSE CABINET
   1. CHARACTERISTICS: WALL-MOUNTED STEEL UNIT WITH FULL-LENGTH, RECESSED PIANO-HINGED DOOR AND KEY-CODED CAM LOCK AND PULL.
      a. SIZE: ADEQUATE FOR STORAGE OF SPARE FUSES SPECIFIED WITH 15 PERCENT SPARE CAPACITY MINIMUM.
      b. FINISH: GRAY, BAKED ENAMEL.
      c. IDENTIFICATION: "SPARE FUSES" IN 1-1/2-INCH- (38-MM-) HIGH LETTERS ON EXTERIOR OF DOOR.
      d. FUSE PULLERS: FOR EACH SIZE OF FUSE, WHERE APPLICABLE AND AVAILABLE, FROM FUSE MANUFACTURER.

EXECUTION

A. FUSE APPLICATIONS
   1. CARTRIDGE FUSES:
      a. SERVICE ENTRANCE: CLASS L, FAST ACTING
      b. FEEDERS: CLASS RK1, FAST ACTING
      c. MOTOR BRANCH CIRCUITS: CLASS RK1, TIME DELAY.
      d. LARGE MOTOR BRANCH (601-4000 A): CLASS L, TIME DELAY.
      e. OTHER BRANCH CIRCUITS: CLASS RK1, TIME DELAY
      f. ELEVATOR POWER MODULES: CLASS J

B. INSTALLATION
   1. INSTALL FUSES IN FUSIBLE DEVICES. ARRANGE FUSES SO RATING INFORMATION IS READABLE WITHOUT REMOVING FUSE.
   2. INSTALL SPARE-FUSE CABINET(S) IN LOCATION SHOWN ON THE DRAWINGS OR AS INDICATED IN THE FIELD BY OWNER.

ENCLOSED SWITCHES AND CIRCUIT BREAKERS

GENERAL

A. SUBMITTALS
   1. PRODUCT DATA: FOR EACH TYPE OF ENCLOSED SWITCH, CIRCUIT BREAKER, ACCESSORY, AND COMPONENT INDICATED. INCLUDE NAMEPLATE RATINGS, DIMENSIONED ELEVATIONS, SECTIONS, WEIGHTS, AND MANUFACTURERS' TECHNICAL DATA ON FEATURES, PERFORMANCE, ELECTRICAL CHARACTERISTICS, RATINGS, ACCESSORIES, AND FINISHES.

B. MAINTENANCE MATERIAL SUBMITTALS
   1. FURNISH EXTRA MATERIALS THAT MATCH PRODUCTS INSTALLED AND THAT ARE PACKAGED WITH PROTECTIVE COVERING FOR STORAGE AND IDENTIFIED WITH LABELS DESCRIBING CONTENTS.
      a. FUSES: EQUAL TO 10 PERCENT OF QUANTITY INSTALLED FOR EACH SIZE AND TYPE, BUT NO FEWER THAN THREE OF EACH SIZE AND TYPE.

PRODUCTS

A. GENERAL REQUIREMENTS
   1. SOURCE LIMITATIONS: OBTAIN ENCLOSED SWITCHES AND CIRCUIT BREAKERS, OVERCURRENT PROTECTIVE DEVICES, COMPONENTS, AND ACCESSORIES, WITHIN SAME PRODUCT CATEGORY, FROM SINGLE MANUFACTURER.
   2. ELECTRICAL COMPONENTS, DEVICES, AND ACCESSORIES: LISTED AND LABELED AS DEFINED IN NFPA 70, BY AN NRTL, AND MARKED FOR INTENDED LOCATION AND APPLICATION.
   3. ACCEPTABLE MANUFACTURERS ARE EATON, SIEMENS, SQUARE D, AND GE.

B. FUSIBLE SWITCHES
   1. FUSIBLE SWITCH, 800 A AND SMALLER: NEMA KS 1, TYPE HD, WITH CLIPS OR BOLT PADS TO ACCOMMODATE SPECIFIED FUSES, LOCKABLE HANDLE WITH CAPABILITY TO ACCEPT TWO PADLOCKS, AND INTERLOCKED WITH COVER IN CLOSED POSITION.
   2. ACCESSORIES:
      a. EQUIPMENT GROUND KIT: INTERNALLY MOUNTED AND LABELED FOR COPPER AND ALUMINUM GROUND CONDUCTORS.
      b. NEUTRAL KIT: INTERNALLY MOUNTED; INSULATED, CAPABLE OF BEING GROUNDED, AND BONDED; AND LABELED FOR COPPER AND ALUMINUM NEUTRAL CONDUCTORS.
      c. AUXILIARY CONTACT KIT: AUXILIARY SET OF CONTACTS ARRANGED TO OPEN BEFORE SWITCH BLADES OPEN. PROVIDE WHEN USED AS REMOTE DISCONNECT FOR VARIABLE FREQUENCY MOTOR CONTROLLER CIRCUITS.
      d. SERVICE-RATED SWITCHES: LABELED FOR USE AS SERVICE EQUIPMENT.

C. NONFUSIBLE SWITCHES
   1. NONFUSIBLE SWITCH, 800 A AND SMALLER: NEMA KS 1, TYPE HD, LOCKABLE HANDLE WITH CAPABILITY TO ACCEPT TWO PADLOCKS, AND INTERLOCKED WITH COVER IN CLOSED POSITION.
   2. ACCESSORIES:
      a. EQUIPMENT GROUND KIT: INTERNALLY MOUNTED AND LABELED FOR COPPER AND ALUMINUM GROUND CONDUCTORS.
      b. NEUTRAL KIT: INTERNALLY MOUNTED; INSULATED, CAPABLE OF BEING GROUNDED, AND BONDED; AND LABELED FOR COPPER AND ALUMINUM NEUTRAL CONDUCTORS.
      c. AUXILIARY CONTACT KIT: AUXILIARY SET OF CONTACTS ARRANGED TO OPEN BEFORE SWITCH BLADES OPEN. PROVIDE WHEN USED AS REMOTE DISCONNECT FOR VARIABLE FREQUENCY MOTOR CONTROLLER CIRCUITS.
      d. SERVICE-RATED SWITCHES: LABELED FOR USE AS SERVICE EQUIPMENT.

D. MOLDED-CASE CIRCUIT BREAKERS
   1. MOLDED-CASE CIRCUIT BREAKER: NEMA AB 1, WITH INTERRUPTING CAPACITY TO MEET AVAILABLE FAULT CURRENTS.
      a. THERMAL-MAGNETIC CIRCUIT BREAKERS: INVERSE TIME-CURRENT ELEMENT FOR LOW-LEVEL OVERLOADS AND INSTANTANEOUS MAGNETIC TRIP ELEMENT FOR SHORT CIRCUITS. ADJUSTABLE MAGNETIC TRIP SETTING FOR CIRCUIT-BREAKER FRAME SIZES 250 A AND LARGER.
      b. ADJUSTABLE INSTANTANEOUS-TRIP CIRCUIT BREAKERS: MAGNETIC TRIP ELEMENT WITH FRONT-MOUNTED, FIELD-ADJUSTABLE TRIP SETTING.
      c. ELECTRONIC TRIP-UNIT CIRCUIT BREAKERS: RMS SENSING; FIELD-REPLACEABLE RATING PLUG; WITH THE FOLLOWING FIELD-ADJUSTABLE SETTINGS:
         - INSTANTANEOUS TRIP.
         - LONG- AND SHORT-TIME PICKUP LEVELS.
         - LONG- AND SHORT-TIME TIME ADJUSTMENTS.
         - GROUND-FAULT PICKUP LEVEL, TIME DELAY, AND I2T RESPONSE.
   2. MOLDED-CASE CIRCUIT-BREAKER FEATURES AND ACCESSORIES:
      a. STANDARD FRAME SIZES, TRIP RATINGS, AND NUMBER OF POLES.
      b. LUGS: MECHANICAL STYLE SUITABLE FOR NUMBER, SIZE, TRIP RATINGS, AND CONDUCTOR MATERIAL.
      c. APPLICATION LISTING: HACR FOR HEATING, AIR-CONDITIONING, AND REFRIGERATING EQUIPMENT.
      d. GROUND-FAULT PROTECTION: INTEGRALLY MOUNTED RELAY AND TRIP UNIT WITH ADJUSTABLE PICKUP AND TIME-DELAY SETTINGS, PUSH-TO-TEST FEATURE, AND GROUND-FAULT INDICATOR.
      e. SHUNT TRIP: 120-V TRIP COIL ENERGIZED FROM SEPARATE CIRCUIT, SET TO TRIP AT 55 PERCENT OF RATED VOLTAGE.
      f. UNDERVOLTAGE TRIP: SET TO OPERATE AT 35 TO 75 PERCENT OF RATED VOLTAGE WITHOUT INTENTIONAL OR WITH FIELD-ADJUSTABLE 0.1- TO 0.6-SECOND TIME DELAY.
      g. AUXILIARY SWITCH: ONE SPDT SWITCH OR TWO SPDT SWITCHES WITH "A" AND "B" CONTACTS; "A" CONTACTS MIMIC CIRCUIT-BREAKER CONTACTS, "B" CONTACTS OPERATE IN REVERSE OF CIRCUIT-BREAKER CONTACTS.

E. ENCLOSURES
   1. NEMA AB 1 AND NEMA KS 1 TO MEET ENVIRONMENTAL CONDITIONS OF INSTALLED LOCATION.
      a. INDOOR LOCATIONS: NEMA 250, TYPE 1.
      b. OUTDOOR LOCATIONS: NEMA 250, TYPE 3R.
      c. OTHER WET OR DAMP INDOOR LOCATIONS: NEMA 250, TYPE 4.
   2. CONDUIT ENTRY: NEMA 250 TYPES 4, 4X, AND 12 ENCLOSURES SHALL CONTAIN NO KNOCKOUTS. NEMA 250 TYPES 7 AND 9 ENCLOSURES SHALL BE PROVIDED WITH THREADED CONDUIT OPENINGS IN BOTH ENDWALLS.
   3. ENCLOSURES DESIGNATED AS NEMA 250 TYPE 4, 4X STAINLESS STEEL, 12, OR 12K SHALL HAVE A DUAL COVER INTERLOCK MECHANISM TO PREVENT UNINTENTIONAL OPENING OF THE ENCLOSURE COVER WHEN THE CIRCUIT BREAKER IS ON AND TO PREVENT TURNING THE CIRCUIT BREAKER ON WHEN THE ENCLOSURE COVER IS OPEN.
   4. ALL ENCLOSURES SHALL INCLUDE A BONDED EQUIPMENT BUS.

EXECUTION

A. INSTALLATION
   1. COORDINATE LAYOUT AND INSTALLATION OF SWITCHES, CIRCUIT BREAKERS, AND COMPONENTS WITH EQUIPMENT SERVED AND ADJACENT SURFACES. MAINTAIN REQUIRED WORKSPACE CLEARANCES AND REQUIRED CLEARANCES FOR EQUIPMENT ACCESS DOORS AND PANELS.
   2. INSTALL INDIVIDUAL WALL-MOUNTED SWITCHES AND CIRCUIT BREAKERS WITH TOPS AT UNIFORM HEIGHT UNLESS OTHERWISE INDICATED.
   3. INSTALL FUSES IN FUSIBLE DEVICES.
   4. COMPLY WITH NFPA 70 AND NECA 1.

Oak Park
VILLAGE OF OAK PARK
CONSTRUCTION DOCUMENT(S)
REVIEWED FOR COMPLIANCE
These document(s) has been reviewed for conformance with applicable provisions of the codes and ordinances of the Village of Oak Park. The permit process is a check and balance system that normally involves a licensed designer, plans examiner, contractor, and inspector to ensure the best quality and safest construction possible. As much as the mentioned professionals attempt to achieve full code compliance every effort has been made to identify all code deficiencies however; failure to identify a code deficiency during plan review and inspection does not alleviate any obligation to comply with all applicable code provisions. Ultimately the owner and contractor are responsible for full code compliance.
KEEP A PRINTED APPROVED COPY OF THE PLANS ON SITE AT ALL TIMES FOR CONTRACTORS AND INSPECTORS
- Signage is required to provide the address, contractor name and emergency contact information
- Before you dig call J.U.L.I.E @ 811
- Construction hours are 7:00AM through 6:00PM all seven days a week
- Address numbers shall be posted in the front and in the alley of the site (if applicable)
- Trees shall be protected in the parkways; do not block sidewalks or alleyways
- Portable toilets shall be properly maintained a minimum of 10' from the lot line
- Construction fencing shall secure the site and materials(6' high for res. & 8' high for comm. sites)
- Respect the neighboring properties; do not trespass on or damage neighboring properties
- Keep the site clean, safe, organized and free from debris.
- Maintain all guardrails, walkways, ladders and stairs in a safe condition
Any and all changes and/or deviations to the approved plans shall be proposed in writing, in triplicate, for a complete re-review and re-approval.

625 W Adams Street – 19th Floor
Chicago, IL 60661
312.320.3668

LICENSED PROFESSIONAL ENGINEER
ALEXANDER G. RADKOFF
062-073334
OF ILLINOIS
AGR - 08.22.2025

DESIGN FIRM LIC. NO: 184008703-002
DESIGN FIRM LIC. NO. EXP.: 04.30.2027
ILLINOIS LICENCE NUMBER: 062.073334
LIC. EXP.: 11.30. 2025

--
SIDEWALK VAULT ALTERATIONS

1144 W LAKE ST
OAK PARK, IL 60301

NO.	DESCRIPTION	DATE
1 (revision triangle)	PERMIT REVISION 1	08/22/2025
1	ISSUED FOR PERMIT	07/28/2025

JOB NO.: 25.068

SCALE:

TITLE: ELECTRICAL SPECIFICATIONS

SHEET: E0.3

7/24/2025 1:06:19 PM

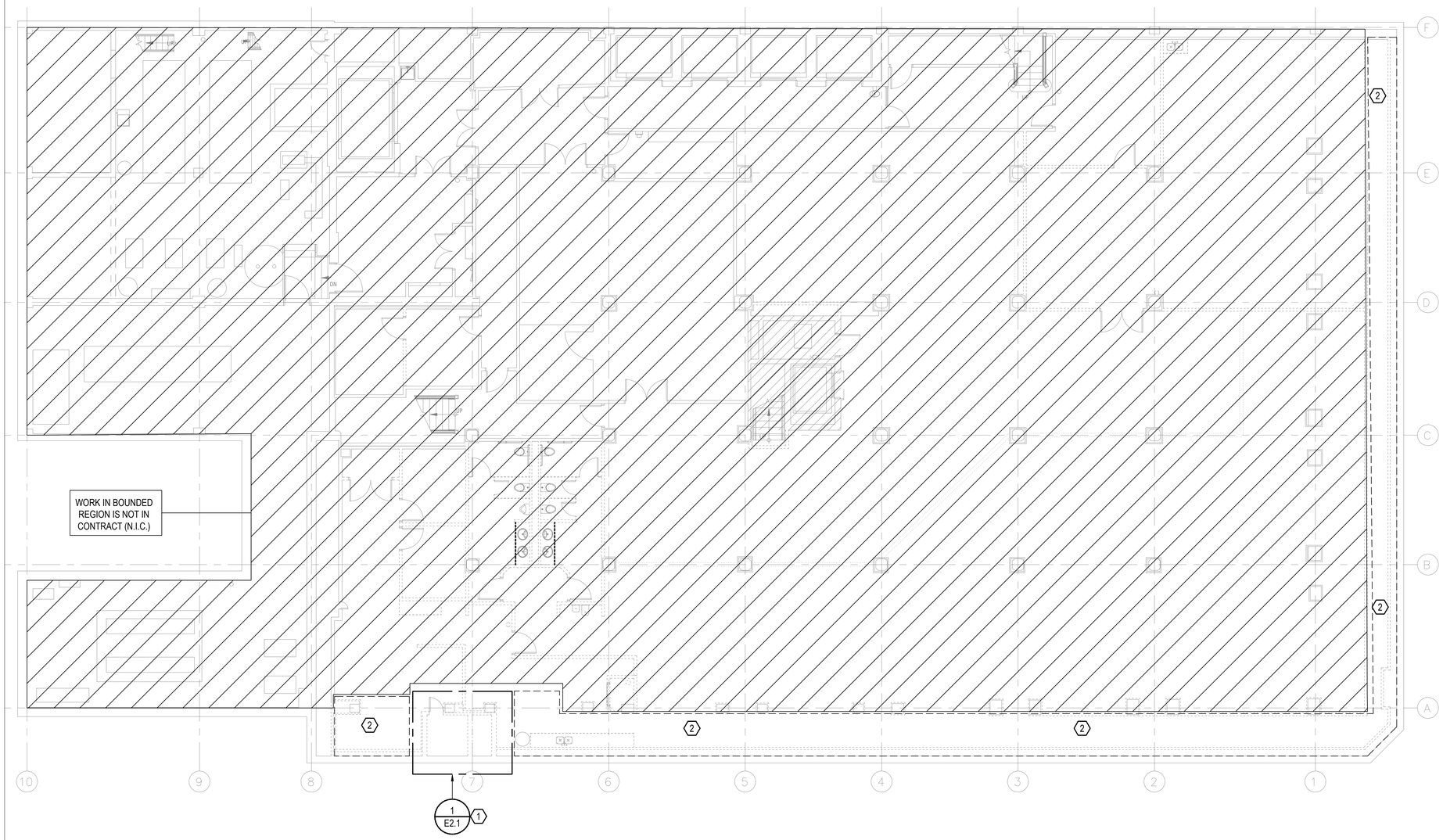

1 E1.1 BASEMENT OVERALL ELECTRICAL DEMOLITION PLAN
1/8" = 1'-0"

0 1' 2' 3' 4' 5' 10'
SCALE: 1/8" = 1'-0"

ELECTRICAL GENERAL NOTES:

1. ELECTRICAL DISTRIBUTION EQUIPMENT IS EXISTING TO REMAIN, UNLESS OTHERWISE NOTED.
2. FIXTURES AND DEVICES NOTED WITH "EX" ARE EXISTING TO REMAIN. MAINTAIN EXISTING CIRCUITRY UNLESS OTHERWISE NOTED ON NEW WORK PLANS.
3. ALL HOLES IN WALLS, COLUMN ENCLOSURES, CEILINGS AND FLOORS FROM CONDUIT PENETRATIONS, JUNCTION BOXES, OR WIRING DEVICES SHALL BE PATCHED AND PAINTED PER THE ARCHITECT. RATED PARTITIONS SHALL BE FIREPROOFED TO MAINTAIN THE EXISTING FIRE RATING.
4. FIXTURES AND DEVICES ON WALLS THAT ARE SCHEDULED FOR DEMOLITION, WHETHER REPRESENTED ON THIS PLAN OR NOT, SHALL BE DISCONNECTED AND REMOVED. INTERCEPT AND EXTEND CIRCUITS AS REQUIRED TO MAINTAIN CONTINUITY OF POWER TO EXISTING DEVICES.
5. FIXTURES AND DEVICES ON WALLS THAT ARE SCHEDULED AS EXISTING TO REMAIN MAY NOT BE REPRESENTED ON THIS PLAN. ELECTRICAL CONTRACTOR SHALL FIELD VERIFY AND CONSULT WITH ARCHITECT AND OWNER TO DETERMINE IF DEVICES NEED TO BE REMOVED.

ELECTRICAL KEY NOTES:⟨#⟩

1. SEE ENLARGED DRAWING FOR ELECTRICAL DEMOLITION WORK.
2. REMOVE AND DEMOLISH EXISTING LIGHT FIXTURE AND ASSOCIATED LIGHTING CONTROL DEVICES OR SWITCHES WITHIN BOUNDED REGION. CONDUIT AND LIGHTING BRANCH POWER WIRING SHALL BE DEMOLISHED BACK TO EXISTING CIRCUIT AT EXISTING PANELBOARD. EXISTING CIRCUIT BREAKER SHALL BE DEMOLISHED AND CIRCUIT SPACE SHALL BE MADE SPARE FOR FUTURE CONNECTION UNDER TENANT FITOUT WORK. DISCONNECT AND REMOVE ALL EXISTING RECEPTACLES WITHIN BOUNDED REGION. CONDUIT AND POWER BRANCH POWER WIRING SHALL BE DEMOLISHED BACK TO EXISTING CIRCUIT AT EXISTING PANELBOARD. SPACE SHALL BE MADE SPARE FOR FUTURE CONNECTION UNDER TENANT FITOUT WORK. ALL EXISTING JUNCTION BOXES, WIRING AND CONDUIT SERVING EXISTING TO REMAIN EQUIPMENT AND DEVICES THAT IS ROUTED WITHIN SPACE TO BE INFILLED SHALL BE RELOCATED TO WITHIN EXISTING REMAIN PORTION OF BUILDING FOOTPRINT. EC SHALL VERIFY ALL EXISTING CONDITIONS IN FIELD PRIOR TO BID.

VILLAGE OF OAK PARK
CONSTRUCTION DOCUMENT(S)
REVIEWED FOR COMPLIANCE
KEEP A PRINTED APPROVED COPY OF THE PLANS ON SITE AT ALL TIMES FOR CONTRACTORS AND INSPECTORS
• Signs is required to provide the address, contractor name and emergency contact information.
• Before you dig call J.U.L.I.E @ 811
• Construction hours are 7:00 AM to 6:00 PM unless written date is reset.
• Address numbers shall be posted in the front and in the alley of the site (if applicable)
• Trees shall be protected in the parkway; do not block sidewalks or alleyway
• Construction Fencing shall be installed around the site prior to the start of work. Fence shall be kept in good condition and maintained
• Construction fencing shall secure the site and materials* legal for one 8.5' high for secure, when
• Respect the neighboring properties, not to trespass on it or damage neighboring properties
• Keep the site free of rodents, rats, mice, and other pests
• Maintain all guardrails, railings, ladders and stairs in a safe condition
Any and all changes and/or deviations to the approved plans shall be proposed in writing, in triplicate, for a complete review and reapproval.

625 W Adams Street – 19th Floor
Chicago, IL 60661
312.320.3668

LICENSED PROFESSIONAL ENGINEER
ALEXANDER G. RADKOFF
062-073334
OF ILLINOIS
AGR - 08.22.2025

DESIGN FIRM LIC. NO: 184008703-002
DESIGN FIRM LIC. NO. EXP.: 04.30.2027
ILLINOIS LICENCE NUMBER: 062.073334
LIC. EXP.: 11.30. 2025

--
SIDEWALK VAULT ALTERATIONS

1144 W LAKE ST
OAK PARK, IL 60301

NO.	DESCRIPTION	DATE
1	PERMIT REVISION 1	08/22/2025
1	ISSUED FOR PERMIT	07/28/2025

JOB NO.: 25.068

SCALE:
BASEMENT ELECTRICAL DEMOLITION PLAN
TITLE:
SHEET: E1.1

7/24/2025 1:06:19 PM

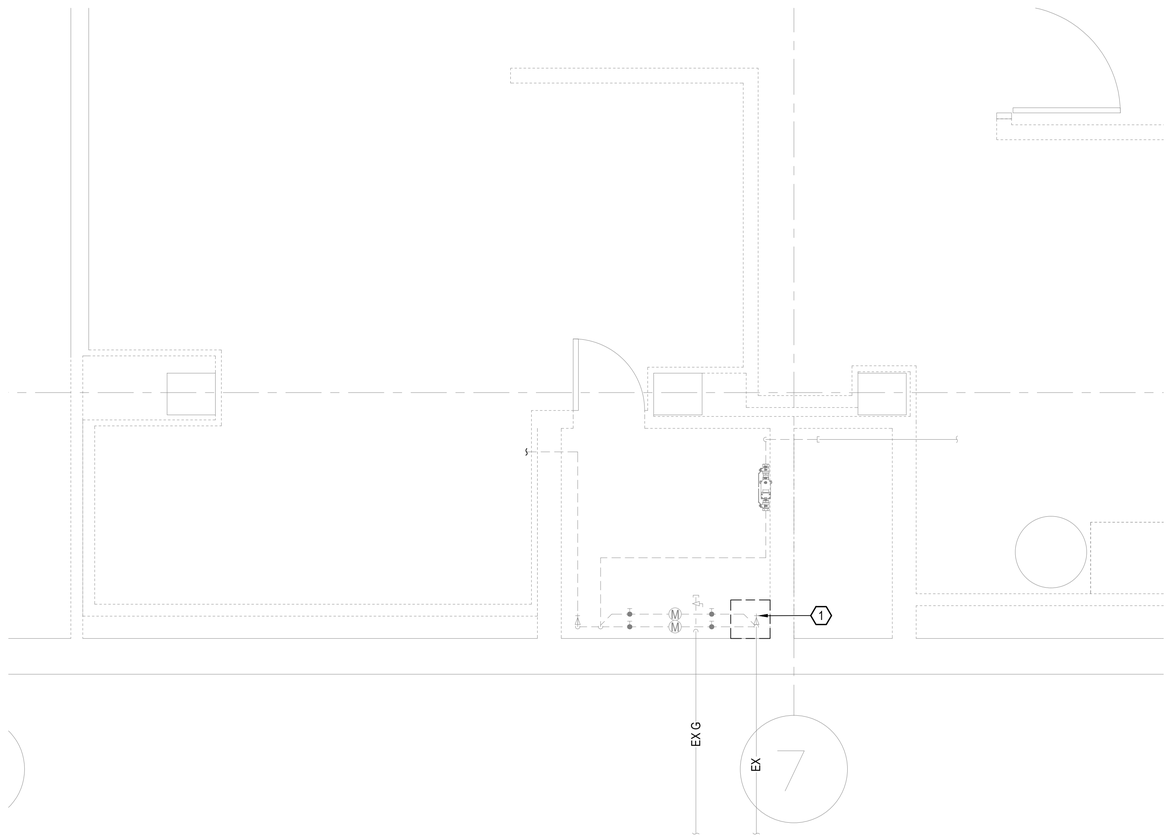

1 / E2.1 ENLARGED BASEMENT DEMOLITION ELECTRICAL PLAN - WATER SERVICE CLOSET

1/2" = 1'-0"

0 1' 2' 3' 4' 5' 10'

SCALE: 1/2" = 1'-0"

ELECTRICAL DEMOLITION KEY NOTES: 1

1. EXISTING GROUNDING CONDUCTOR SHALL BE DISCONNECTED FROM EXISTING DOMESTIC WATER MAIN PIPING AND SHALL BE PRESERVED FOR EXTENSION TO THE NEW WATER SERVICE LOCATION. THE CONTRACTOR SHALL VERIFY THE EXISTING SIZE OF GROUNDING CONDUCTOR IN FIELD PRIOR TO BID. SHOULD THE EXISTING GROUNDING CONDUCTOR BE SIZED LESS THAN 3/0 WIRE, THE CONTRACTOR SHALL DEMOLISH THE EXISTING GROUNDING CONDUCTOR AND SHALL PROVIDE NEW 3/0 WIRE FROM EXISTING MAIN GROUND BAR IN ELECTRICAL ROOM WITHIN EXISTING CONDUIT TO THIS LOCATION.

ELECTRICAL DEMOLITION GENERAL NOTES:

1. EXISTING CONDITIONS SHOWN ON THIS DRAWING HAVE BEEN OBTAINED FROM EXISTING DRAWINGS, FIELD OBSERVATIONS AND PHOTOS, AND MAY NOT INDICATE ALL ACTUAL EXISTING CONDITIONS. THE CONTRACTOR IS RESPONSIBLE FOR DETERMINING THE ACTUAL EXISTING CONDITIONS PRIOR TO FABRICATION OR PERFORMANCE OF ANY WORK. SHOULD CONDITIONS BE DISCOVERED THAT PREVENT EXECUTION OF THE WORK AS INDICATED, THE CONTRACTOR SHALL IMMEDIATELY NOTIFY THE ENGINEER AND ARCHITECT IN WRITING AND AWAIT DIRECTION BEFORE PROCEEDING WITH THE WORK.
2. PATCH ALL WALL, FLOOR, AND CEILING SURFACES SCHEDULED TO REMAIN, WHERE MEP ELEMENTS ARE BEING REMOVED, TO MATCH EXISTING CONDITIONS. REFER TO ARCHITECTURAL DRAWINGS FOR ADDITIONAL INFORMATION.
3. ELECTRICAL DISTRIBUTION EQUIPMENT IS EXISTING TO REMAIN, UNLESS OTHERWISE NOTED.
4. FIXTURES AND DEVICES NOTED WITH "EX" ARE EXISTING TO REMAIN. MAINTAIN EXISTING CIRCUITRY UNLESS OTHERWISE NOTED ON NEW WORK PLANS.
5. ALL HOLES IN WALLS, COLUMN ENCLOSURES, CEILINGS AND FLOORS FROM CONDUIT PENETRATIONS, JUNCTION BOXES, OR WIRING DEVICES SHALL BE PATCHED AND PAINTED PER THE ARCHITECT. RATED PARTITIONS SHALL BE FIREPROOFED TO MAINTAIN THE EXISTING FIRE RATING.
6. FIXTURES AND DEVICES ON WALLS THAT ARE SCHEDULED FOR DEMOLITION, WHETHER REPRESENTED ON THIS PLAN OR NOT, SHALL BE DISCONNECTED AND REMOVED.

VILLAGE OF OAK PARK

CONSTRUCTION DOCUMENT(S)

REVIEWED FOR COMPLIANCE

This set of plans and specifications is approved for compliance with the Village of Oak Park Building Code and other applicable codes and ordinances. Approval of these plans and specifications does not permit the violation of any section of the Village of Oak Park Building Code or any other ordinance of the Village of Oak Park. Approval of these plans and specifications does not prevent the Building Commissioner from requiring corrections to errors in these plans and specifications if such errors are found to be in violation of the Village of Oak Park Building Code or any other ordinance of the Village of Oak Park.

KEEP A PRINTED APPROVED COPY OF THE PLANS ON SITE AT ALL TIMES FOR CONTRACTORS AND INSPECTORS

- Signage is required to provide the address, contractor name and emergency contact information.
  - Before you dig call J.U.L.I.E @ 811
- Construction hours are 7:00 AM to 7:00 PM unless otherwise stated on permit date o mark.
- Address numbers shall be posted in the front and in the alley of the site (if applicable)
- Trees shall be protected in the parkway; do not block sidewalks or alleyway.
- Construction Fencing shall be installed around the site prior to the start of work. Fence shall be maintained in good condition throughout the duration of the project.
- Construction fencing shall remain the site and maintained legal for one (1) year or as long as permit is valid.
- Respect the neighboring properties; we're responsible for any damage neighboring properties sustain due to our work. Protect their property as well as ours.
  - Maintain all guardrails, railings, ladders and stairs in a safe condition.

Any and all changes and/or deviations to the approved plans shall be proposed in writing, in triplicate, for a complete re-review and re-approval.

625 W Adams Street – 19th Floor
Chicago, IL 60661
312.320.3668

LICENSED PROFESSIONAL ENGINEER
ALEXANDER G. RADKOFF
062-073334
OF ILLINOIS

AGR - 08.22.2025

DESIGN FIRM LIC. NO: 184008703-002
DESIGN FIRM LIC. NO. EXP.: 04.30.2027
ILLINOIS LICENCE NUMBER: 062.073334
LIC. EXP.: 11.30. 2025

--

SIDEWALK VAULT ALTERATIONS

1144 W LAKE ST
OAK PARK, IL 60301

NO.	DESCRIPTION	DATE
1	PERMIT REVISION 1	08/22/2025
	ISSUED FOR PERMIT	07/28/2025

JOB NO.: 25.068

1

DWG:

ENLARGED BASEMENT ELECTRICAL DEMOLITION PLAN

TITLE:

SHEET: E2.1

7/24/2025 1:06:19 PM

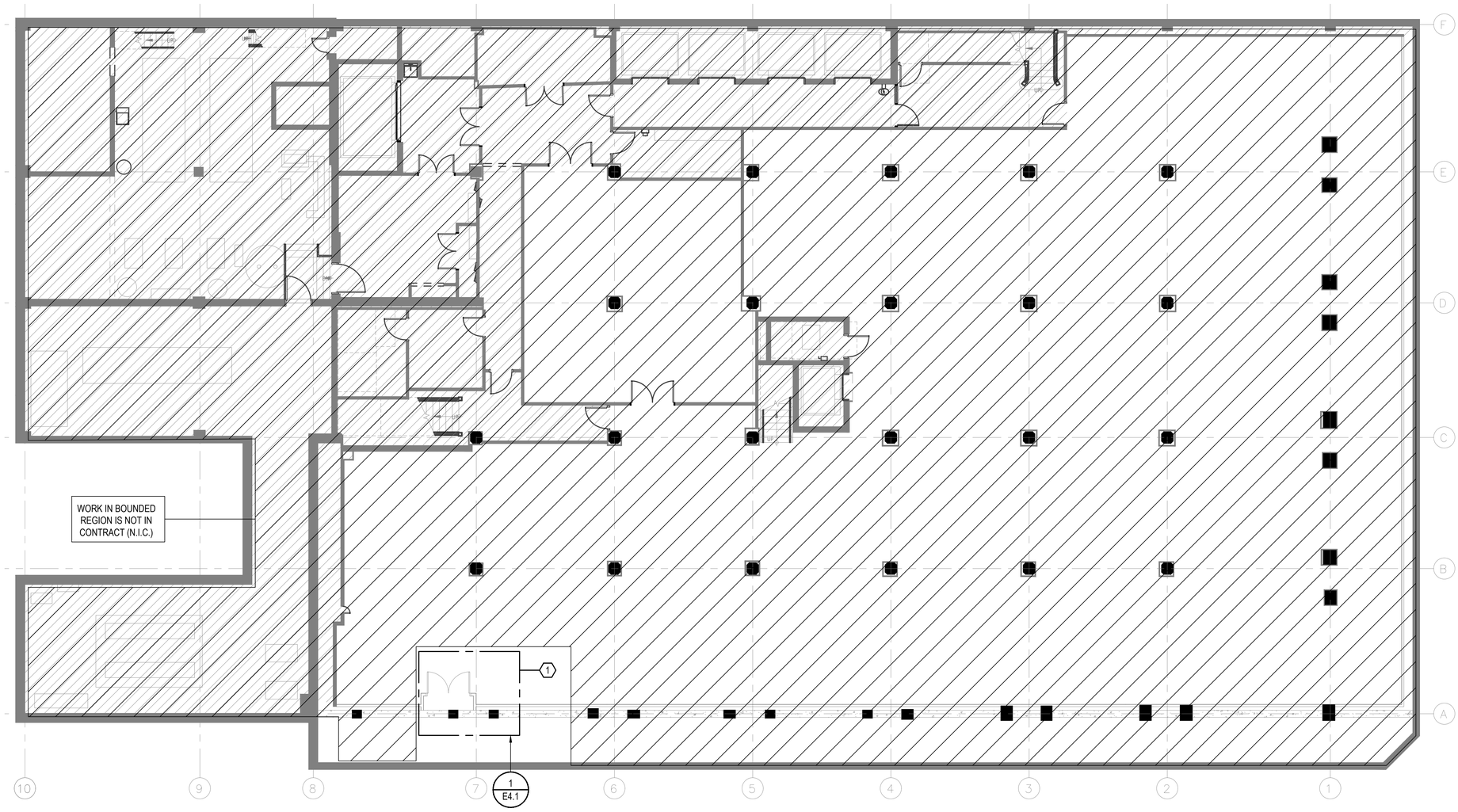

ELECTRICAL GENERAL NOTES:

1. ELECTRICAL DISTRIBUTION EQUIPMENT IS EXISTING TO REMAIN, UNLESS OTHERWISE NOTED.
2. FIXTURES AND DEVICES NOTED WITH "EX" ARE EXISTING TO REMAIN. MAINTAIN EXISTING CIRCUITRY UNLESS OTHERWISE NOTED ON NEW WORK PLANS.
3. ALL HOLES IN WALLS, COLUMN ENCLOSURES, CEILINGS AND FLOORS FROM CONDUIT PENETRATIONS, JUNCTION BOXES, OR WIRING DEVICES SHALL BE PATCHED AND PAINTED PER THE ARCHITECT. RATED PARTITIONS SHALL BE FIREPROOFED TO MAINTAIN THE EXISTING FIRE RATING.
4. FIXTURES AND DEVICES ON WALLS THAT ARE SCHEDULED FOR DEMOLITION, WHETHER REPRESENTED ON THIS PLAN OR NOT, SHALL BE DISCONNECTED AND REMOVED. INTERCEPT AND EXTEND CIRCUITS AS REQUIRED TO MAINTAIN CONTINUITY OF POWER TO EXISTING DEVICES.
5. FIXTURES AND DEVICES ON WALLS THAT ARE SCHEDULED AS EXISTING TO REMAIN MAY NOT BE REPRESENTED ON THIS PLAN. ELECTRICAL CONTRACTOR SHALL FIELD VERIFY AND CONSULT WITH ARCHITECT AND OWNER TO DETERMINE IF DEVICES NEED TO BE REMOVED.

ELECTRICAL KEY NOTES:(#)

1. SEE ENLARGED DRAWING FOR ELECTRICAL NEW WORK.

1 / E3.1 BASEMENT OVERALL ELECTRICAL NEW WORK PLAN

1/8" = 1'-0"

0 1' 2' 3' 4' 5' 10'

SCALE: 1/8" = 1'-0"

VILLAGE OF OAK PARK

CONSTRUCTION DOCUMENT(S)

REVIEWED FOR COMPLIANCE

Review and approval of this construction document(s) by the Village of Oak Park Building Department shall not prevent the Village of Oak Park from requiring the correction of errors in the construction documents and other supporting data when violations of the Village of Oak Park Municipal Code are found prior to issuance of a certificate of occupancy or completion.

KEEP A PRINTED APPROVED COPY OF THE PLANS ON SITE AT ALL TIMES FOR CONTRACTORS AND INSPECTORS

- Permit is required to provide the address, contractor name and emergency contact information.
  - Before you dig call J.U.L.I.E @ 811
- Construction hours are 7:00 AM to 7:00 PM unless a variance has been made.
- Address numbers shall be posted in the front and in the alley of the site (if applicable)
- Trees shall be protected in the parkway; do not block sidewalks or alleyway
- Construction materials and equipment shall be placed on the site, not in the parkway
- Construction fencing shall secure the site and maintained legal for one A 6' high for secure, other
- Respect the neighboring properties, not liable/responsible for 1st damage neighboring properties
  - Protection of trees, shrubs, lawns, sidewalks and alleys
  - Maintain all guardrails, railings, ladders and stairs in a safe condition

Any and all changes and/or deviations to the approved plans shall be proposed in writing, in triplicate, for a complete review and resubmittal.

625 W Adams Street – 19th Floor
Chicago, IL 60661
312.320.3668

ILLINOIS LICENSED PROFESSIONAL ENGINEER
ALEXANDER G. RADKOFF
062-073334
OF ILLINOIS

AGR - 08.22.2025

DESIGN FIRM LIC. NO: 184008703-002
DESIGN FIRM LIC. NO. EXP.: 04.30.2027
ILLINOIS LICENCE NUMBER: 062.073334
LIC. EXP.: 11.30. 2025

--

SIDEWALK VAULT ALTERATIONS

1144 W LAKE ST
OAK PARK, IL 60301

NO.	DESCRIPTION	DATE
1	PERMIT REVISION 1	08/22/2025
1	ISSUED FOR PERMIT	07/28/2025

JOB NO.: 25.068

SCALE:

TITLE: OVERALL BASEMENT ELECTRICAL PLAN

SHEET: E3.1

7/24/2025 1:06:19 PM

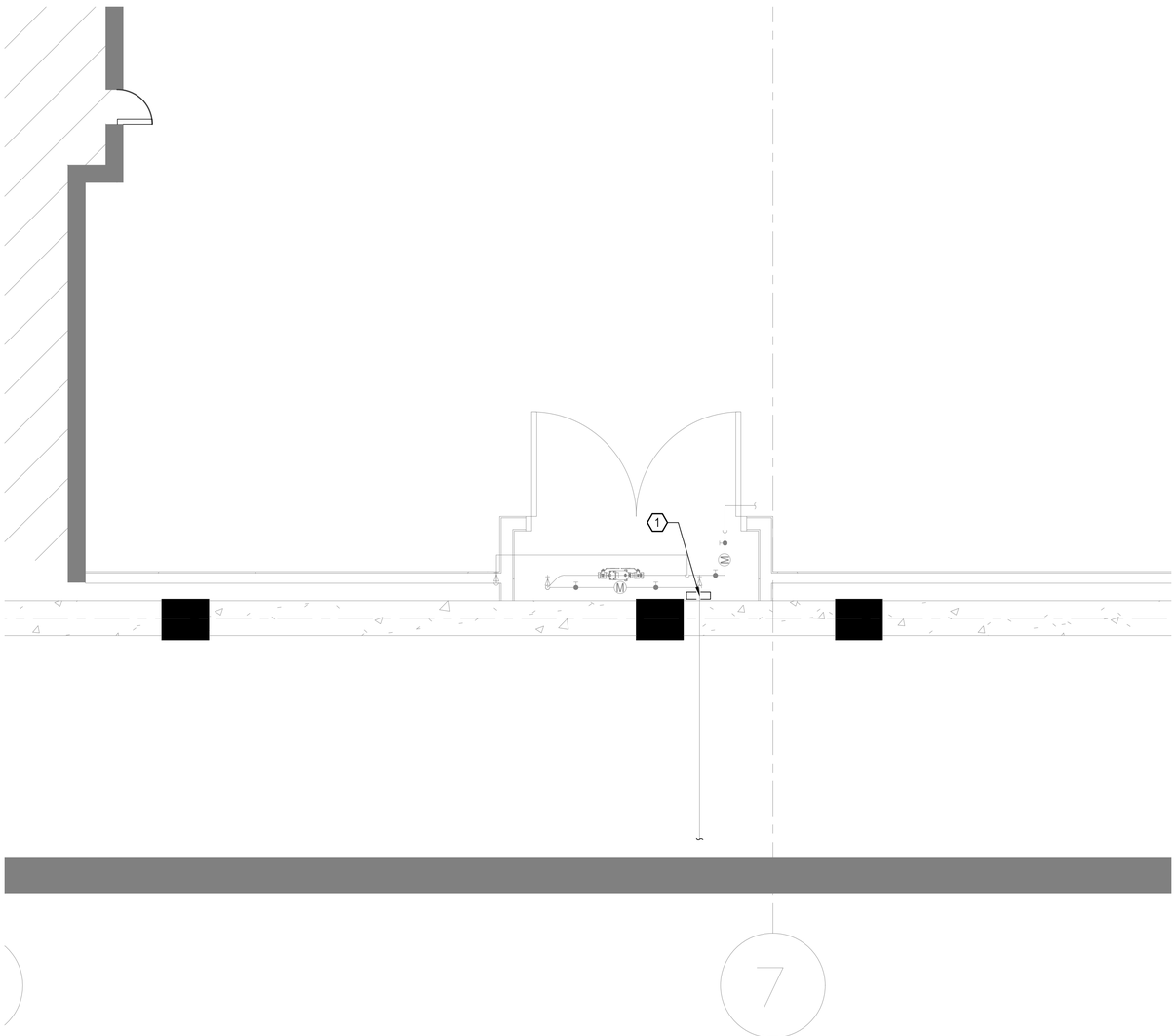

1 E4.1 ENLARGED BASEMENT ELECTRICAL PLAN - WATER SERVICE CLOSET
1/2" = 1'-0"

0 1' 2' 3' 4' 5' 10'
SCALE: 1/2" = 1'-0"

ELECTRICAL KEY NOTES: 1

1. GROUNDING CONDUCTOR SHALL BE INSTALLED ON THE STREET SIDE OF THE DOMESTIC WATER METER FOR THE BUILDING. TERMINATION POINT SHALL BE MARKED AN IDENTIFIED IN ACCORDANCE WITH 2020 NEC ARTICLE 250.64(b). GROUNDING CONDUCTOR MUST BE INSTALLED WITHIN 5 FEET OF DOMESTIC WATER SERVICE ENTRANCE. COORDINATE EXACT LOCATION OF PIPING IN FIELD WITH PLUMBING CONTRACTOR. EC SHALL RELOCATE EXISTING GROUNDING CONDUCTOR AND ASSOCIATED CONDUIT AS REQUIRED FROM ORIGINAL LOCATION AND SHALL RECONNECT IN ACCORDANCE WITH 2020 NEC ARTICLE 250.

ELECTRICAL GENERAL NOTES:

1. FIRE STOP ALL FIRE RATED FLOORS, CEILINGS, AND WALLS AS REQUIRED BY CODE. PENETRATIONS INTO OR THROUGH FIRE RESISTANCE RATED WALLS SHALL COMPLY WITH IBC CHAPTER 7.
2. PROVIDE EXPANSION FITTINGS AS REQUIRED AT ALL EXPANSION JOINTS. COORDINATE WITH ARCHITECTURAL DRAWINGS.
3. TYPE IMC CONDUIT (EMT) SHALL BE USED IN ALL INTERIOR LOCATIONS, INCLUDING CIRCUITS CONCEALED WITHIN WALL AND CEILING CAVITIES AND EXPOSED CIRCUITS. EXPOSED CIRCUITS SHALL BE ROUTED PARALLEL AND PERPENDICULAR TO BUILDING STRUCTURE. EXPOSED CONDUIT SHALL BE PAINTED PER THE ARCHITECTURAL DRAWINGS.
4. RIGID METAL CONDUIT (RMC), INTERMEDIATE METAL CONDUIT (IMC) OR RIGID NON-METALLIC CONDUIT SHALL BE USED IN ALL CONCRETE AND UNDERGROUND INSTALLATIONS.
5. ALL CONDUCTORS USED FOR ELECTRIC SERVICE CONDUCTORS, SERVICE ENTRANCE CONDUCTORS, FEEDERS, CIRCUITS, GROUNDING ELECTRODES AND EQUIPMENT GROUNDS SHALL BE COPPER. ALUMINUM WIRING SHALL NOT BE PERMITTED.
6. TYPE AC, FC, FCC, IGS, MC, MI, NM, NMC, NMS,TC, SE/USE CABLING IS NOT PERMITTED FOR USE IN ANY LOCATIONS.
7. COORDINATE EXACT LOCATIONS OF PLUMBING EQUIPMENT WITH DIVISION 22. UNLESS NOTED OTHERWISE, PLUMBING EQUIPMENT DISCONNECTS SHALL BE FURNISHED, INSTALLED, AND WIRED BY EC.
8. EC SHALL NOT HAVE MORE THAN THREE CURRENT CARRYING CONDUCTORS IN A CONDUIT WITHOUT DERATING AMPACITIES PER THE NEC.
9. WHERE DEVICES ARE INCLUDED AND DIMENSIONED ON THE ARCHITECTURAL DRAWINGS, THOSE LOCATIONS SHALL GOVERN. WHERE DEVICES ARE OMITTED FROM THE ARCHITECTURAL DRAWINGS, INSTALL IN ACCORDANCE WITH THIS PLAN AND THE DEFAULT LOCATIONS IN THE ELECTRICAL SPECIFICATIONS. ALL DEVICES SHALL BE INSTALLED PER ADA. IT SHALL BE THE RESPONSIBILITY OF THE ELECTRICAL CONTRACTOR TO VERIFY EXACT DEVICE LOCATIONS. WHERE DEVICES ARE INSTALLED IN THE FIELD AND DIFFER FROM DESIGN DOCUMENT DIMENSIONS, IT IS THE RESPONSIBILITY OF THE CONTRACTOR TO CORRECT DEVICE LOCATIONS TO MATCH CONSTRUCTION DOCUMENTS, AT NO COST TO THE OWNER.

VILLAGE OF OAK PARK
CONSTRUCTION DOCUMENT(S)
REVIEWED FOR COMPLIANCE
KEEP A PRINTED APPROVED COPY OF THE PLANS ON SITE AT ALL TIMES FOR CONTRACTORS AND INSPECTORS
• Signee is required to provide the address, contact name and emergency contact information.
• Before you dig call J.U.L.I.E @ 811
• Construction hours are 7:00 AM to 7:00 PM unless state a mask.
• Address numbers shall be posted in the front and in the alley of the site (if applicable)
• Trees shall be protected in the parkway; do not block sidewalks or alleyway
• Construction materials and equipment shall be placed on the site; NO PARKING ON STREET
• Construction fencing shall remain the site and maintained* legit for one, & 8' high for secure, sheet
• Respect the neighboring properties, no trespasses or / or damage neighboring properties
• Keep the site free from debris and trash; NO BURNING ON SITE
• Maintain all guardrails, railings, ladders and stairs in a safe condition
Any and all changes and/or deviations to the approved plans shall be proposed in writing, in triplicate, for a complete re-review and re-approval.

625 W Adams Street – 19th Floor
Chicago, IL 60661
312.320.3668

LICENSED PROFESSIONAL ENGINEER
ALEXANDER G. RADKOFF
062-073334
OF ILLINOIS
AGR - 08.22.2025

DESIGN FIRM LIC. NO: 184008703-002
DESIGN FIRM LIC. NO. EXP.: 04.30.2027
ILLINOIS LICENCE NUMBER: 062.073334
LIC. EXP.: 11.30. 2025

--
SIDEWALK VAULT ALTERATIONS

1144 W LAKE ST
OAK PARK, IL 60301

NO.	DESCRIPTION	DATE
1	PERMIT REVISION 1	08/22/2025
1	ISSUED FOR PERMIT	07/28/2025

JOB NO.: 25.068

SCALE: 1

TITLE: ENLARGED BASEMENT ELECTRICAL PLAN

SHEET: E4.1

7/24/2025 1:06:19 PM

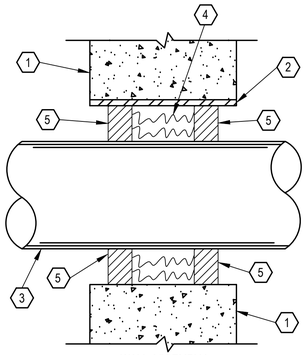

WALL ASSEMBLY

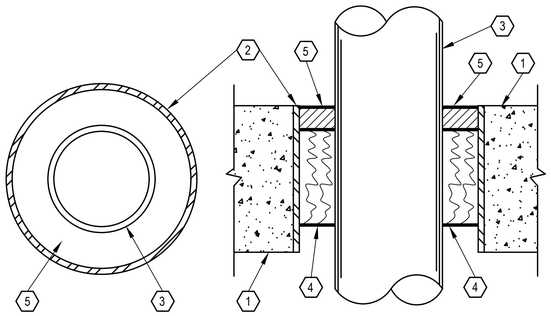

FLOOR ASSEMBLY

1 / E5.1 FIRE STOP DETAIL
NOT TO SCALE

FIRE STOP CODED NOTES: (#)

1. FLOOR OR WALL ASSEMBLY MINIMUM 5" THICK NORMAL WEIGHT CONCRETE FLOOR OR WALL OR MINIMUM 7-5/8" THICK MASONRY WALL HAVING A MINIMUM 2 HOUR FIRE RESISTIVE RATING WITH A NOMINAL 6" DIAMETER OPENING.

2. STEEL PIPE SLEEVE (OPTIONAL) NOMINAL 6" DIAMETER SCHEDULE 40 OR HEAVIER STEEL PIPE SLEEVE. (2 TRADE SIZES LARGER THAN CONDUIT).

3. STEEL OR EMT CONDUIT NOMINAL 4" DIAMETER CENTERED THROUGH THE OPENING.

4. FORMING MATERIAL MINERAL WOOL, MINIMUM DENSITY OF 4.4 PCF FIRMLY PACKED WITHIN THE OPENING TO A NOMINAL THICKNESS OF 3" FOR FLOORS. FOR WALLS, THE MINERAL WOOL SHALL BE CENTERED IN THE OPENING.

5. FILL, VOID OR CAVITY MATERIAL* - FILL MATERIAL THAT IS TROWELED INTO THE OPENING TO A MINIMUM THICKNESS OF 1/2" IN ACCORDANCE WITH THE ACCOMPANYING INSTALLATION INSTRUCTIONS. IN WALLS, THE FILL MATERIAL SHALL BE INSTALLED ON BOTH SURFACES OF THE OPENING.

* BEARING THE "UL" CLASSIFICATION MARKING

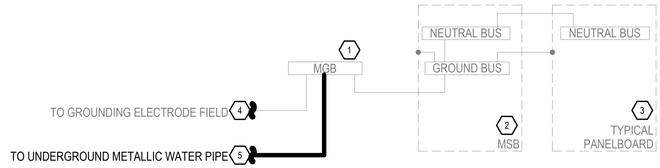

GENERAL NOTES:

1. REFER TO ELECTRICAL SPECIFICATIONS AND RISER DIAGRAM FOR ADDITIONAL INFORMATION.

2. ALL BUILDING STEEL COMPONENTS SHALL BE EFFECTIVELY BONDED TOGETHER.

3. GROUNDING RISER IS FOR REFERENCE ONLY. PROVIDE GROUNDING SYSTEM ADHERING TO 2020 NEC ARTICLE 250.

4. EQUIPMENT LUGS SHALL BE SIZED TO ACCOMMODATE ALL GROUND AND BONDING CONDUCTORS.

KEYNOTES: (#)

1. EXISTING MAIN GROUND BAR TO REMAIN AND ASSOCIATED GROUNDING AND BONDING CONFIGURATION TO REMAIN.
2. EXISTING MAIN SWITCHBOARD AND ASSOCIATED GROUND AND BONDING CONFIGURATION TO REMAIN.
3. EXISTING TYPICAL PANELBOARD AND ASSOCIATED GROUND AND BONDING CONFIGURATION TO REMAIN.
4. GROUNDING ELECTRODE TO GROUND ROD ELECTRODE TO REMAIN.
5. BONDING JUMPER TO METAL UNDERGROUND WATER PIPE PER 2020 NEC 250.104, SIZED PER NEC TABLE 250.66 [#3/0 CU]

2 / E5.1 GROUND RISER DIAGRAM
NOT TO SCALE

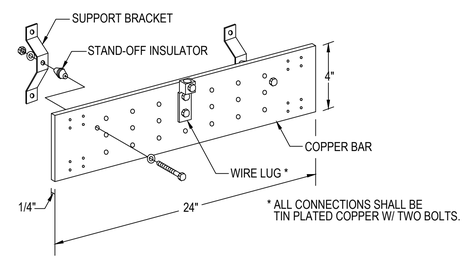

3 / E5.1 GROUND BAR DETAIL
NOT TO SCALE

VILLAGE OF OAK PARK
CONSTRUCTION DOCUMENT(S)
REVIEWED FOR COMPLIANCE
KEEP A PRINTED APPROVED COPY OF THE PLANS ON SITE AT ALL TIMES FOR CONTRACTORS AND INSPECTORS

625 W Adams Street – 19th Floor
Chicago, IL 60661
312.320.3668

LICENSED PROFESSIONAL ENGINEER
ALEXANDER G. RADKOFF
062-073334
OF ILLINOIS
AGR - 08.22.2025

DESIGN FIRM LIC. NO: 184008703-002
DESIGN FIRM LIC. NO. EXP.: 04.30.2027
ILLINOIS LICENCE NUMBER: 062.073334
LIC. EXP.: 11.30. 2025

--
SIDEWALK VAULT ALTERATIONS

1144 W LAKE ST
OAK PARK, IL 60301

NO.	DESCRIPTION	DATE
1	PERMIT REVISION 1	08/22/2025
1	ISSUED FOR PERMIT	07/28/2025

JOB NO.: 25.068

SCALE:

TITLE: ELECTRICAL DETAILS

SHEET: E5.1

7/24/2025 1:06:19 PM

PLUMBING LEGEND

SYMBOL	ABRV.	DESCRIPTION	SYMBOL	ABRV.	DESCRIPTION
EX (X)	EX	EXISTING PIPING TO REMAIN - (X) DESIGNATES SERVICE			CONNECTION POINT, NEW TO EXISTING
RX (X)	RX	EXISTING PIPING TO BE REMOVED - (X) DESIGNATES SERVICE			DISCONNECTION POINT
		PIPING ROUTED BELOW GRADE / SLAB (LINE TYPE INDICATES SERVICE TYPE UNO)	1		DRAWING KEYNOTE
SAN	SAN	SANITARY PIPING	A		DEMOLITION DRAWING KEYNOTE
GW	GW	GREASE WASTE PIPING (TO GREASE INTERCEPTOR)	1		REVISION NUMBER
OW	OW	OIL WASTE PIPING			REVISION CLOUD
ST	ST	STORM PIPING (PRIMARY)			PIPE UP
OST	OST	SECONDARY / OVERFLOW DRAIN PIPING			PIPE DOWN
V	V	VENT PIPING			PIPE TEE DOWN
CW	CW	DOMESTIC COLD WATER PIPING			TOP PIPE CONNECTION
HW	HW	DOMESTIC HOT WATER PIPING			BALL VALVE OR SHUTOFF VALVE IN RISE
HWR	HWR	DOMESTIC HOT WATER RETURN PIPING			PIPE CAP
DIS	DIS	DEIONIZED WATER SUPPLY PIPING			PIPE UNION
DIR	DIR	DEIONIZED WATER RETURN PIPING			FLANGED CONNECTION
TP	TP	TRAP PRIMER PIPING			CONCENTRIC PIPE REDUCER
G	G	GAS PIPING (NATURAL OR PROPANE)			ECCENTRIC PIPE REDUCER
FO	FO	FUEL OIL PIPING			FLOW ARROW
CD	CD	CONDENSATE DRAIN PIPING			PIPE ANCHOR
PD	PD	PUMP DISCHARGE			PIPE GUIDE
MV	MV	MEDICAL VACUUM PIPING		BV	BALL VALVE
MA	MA	MEDICAL AIR PIPING		BFV	BUTTERFLY VALVE
LV	LV	LABORATORY VACUUM PIPING		PV	PLUG VALVE
LA	LA	LABORATORY AIR PIPING		GV	GATE VALVE
PV	PV	PROCESS AIR VACUUM PIPING		GBV	GLOBE VALVE
PA	PA	PROCESS AIR PIPING		PRV	PRESSURE REDUCING VALVE
OXY	OXY	OXYGEN PIPING		CV	CHECK VALVE
HEX	HEX	HELIX PIPING		BFP	BACK FLOW PREVENTER
N	N	NITROGEN PIPING			PRESSURE RELIEF VALVE
CA	CA	COMPRESSED AIR PIPING			AUTOMATIC FLOW CONTROL VALVE
AV	AV	ACID VENT PIPING			CALIBRATED BALANCING VALVE
AW	AW	ACID WASTE PIPING			AUTOMATIC AIR VENT
CO2	CO2	CARBON DIOXIDE PIPING			MANUAL AIR VENT
MAI	MAI	MEDICAL AIR INTAKE PIPING			P/T PLUG
MVD	MVD	MEDICAL VACUUM DISCHARGE PIPING		PG	PRESSURE GAUGE W/ SHUT-OFF
NO	NO	NITROUS OXIDE PIPING			THERMOMETER
WAGD	WAGD	WASTE ANESTHETIC GAS DISCHARGE			STRAINER
X		MEDICAL GAS OUTLET (LETTER DESIGNATES GAS TYPE)		T&P	TEMPERATURE AND PRESSURE RELIEF VALVE
M		UTILITY METER		MV	MIXING VALVE
		HOT WATER RECIRC. PUMP			EXTERNAL WALL HYDRANT
X		DOMESTIC SHOCK ABSORBER/WATER HAMMER ARRESTER; TEXT DENOTES SIZE (PDI: A ~ F)		FCO	CLEAN OUT, FLOOR
		GAS SOLENOID VALVE		CO	CLEAN OUT, EXPOSED
		GAS COCK		FD	FLOOR DRAIN
		AQUASTAT		RD	ROOF DRAIN
		VACUUM RELIEF VALVE			PIPE TRAP
	VB	VACUUM BREAKER			FLOOR DRAIN WITH TRAP PRIMER
		HOSE BIBB			FLOOR SINK/RECEPTOR WITH HALF GRATE
		FLEXIBLE PIPE CONNECTION		OS&Y	OS&Y VALVE
I.E. XX.XX		INVERT ELEVATION B.F.F. (IN FEET)		TS	OS&Y VALVE WITH TAMPER SWITCH
XX		KITCHEN EQUIPMENT DESIGNATION; REFER TO KITCHEN EQUIPMENT DRAWINGS FOR DETAILS			

NOTES:
1. NOT ALL SYMBOLS AND ABBREVIATIONS ARE IN USE FOR THIS PROJECT.

VILLAGE OF OAK PARK
CONSTRUCTION DOCUMENT(S)
REVIEWED FOR COMPLIANCE
KEEP A PRINTED APPROVED COPY OF THE PLANS ON SITE AT ALL TIMES FOR CONTRACTORS AND INSPECTORS

625 W Adams Street – 19th Floor
Chicago, IL 60661
312.320.3668

LICENSED PROFESSIONAL ENGINEER
ALEXANDER G. RADKOFF
062-073334
OF ILLINOIS
AGR - 08.22.2025

DESIGN FIRM LIC. NO: 184008703-002
DESIGN FIRM LIC. NO. EXP.: 04.30.2027
ILLINOIS LICENCE NUMBER: 062.073334
LIC. EXP.: 11.30. 2025

SIDEWALK VAULT ALTERATIONS

1144 W LAKE ST
OAK PARK, IL 60301

NO.	DESCRIPTION	DATE
2	PERMIT REVISION 1	08/22/2025
1	ISSUED FOR PERMIT	07/28/2025

JOB NO.: 25.068

SCALE:

TITLE: PLUMBING DATA SHEET

SHEET: P0.1

7/24/2025 1:06:19 PM

PLUMBING SPECIFICATIONS

1. PRODUCTS AND INSTALLATION SHALL COMPLY WITH ALL APPLICABLE LAWS, CODES, GOVERNMENT REGULATIONS, UTILITY COMPANY REQUIREMENTS, ETC. OF ALL AUTHORITIES HAVING JURISDICTION. WORK SHALL COMPLY WITH THE FOLLOWING CODES, STANDARDS AND ORGANIZATIONS:

2014 ILLINOIS PLUMBING CODE (IPC) WITH OAK PARK LOCAL AMENDMENTS (EFFECTIVE 03-18-2025)
2021 INTERNATIONAL MECHANICAL CODE (IMC) WITH OAK PARK LOCAL AMENDMENTS (EFFECTIVE 01-01-2025)
2021 INTERNATIONAL ENERGY CONSERVATION CODE WITH OAK PARK LOCAL AMENDMENTS (EFFECTIVE 01-01-2025)
2020 NATIONAL ELECTRIC CODE WITH OAK PARK LOCAL AMENDMENTS (EFFECTIVE 01-01-2025)
2021 INTERNATIONAL FUEL GAS CODE WITH OAK PARK LOCAL AMENDMENTS (EFFECTIVE 01-01-2025)
2021 INTERNATIONAL FIRE CODE WITH OAK PARK LOCAL AMENDMENTS (EFFECTIVE 01-01-2025)
NFPA 51, 54 AND 58
2021 INTERNATIONAL BUILDING CODE WITH OAK PARK LOCAL AMENDMENTS (EFFECTIVE 01-01-2025)
2021 INTERNATIONAL EXISTING BUILDING CODE WITH OAK PARK LOCAL AMENDMENTS (EFFECTIVE 01-01-2025)
UNDERWRITERS LABORATORY (UL), IRI, FM
VILLAGE OF OAK PARK LOCAL AMENDMENTS OF THESE CODES

1

WHERE CONFLICTS EXIST BETWEEN CODES, STANDARDS OR THIS SPECIFICATION THE HIGHER REQUIREMENT SHALL APPLY. DEVIATIONS FROM THE CONTRACT DRAWINGS REQUIRED BY THE ABOVE AUTHORITIES SHALL BE SUBMITTED TO THE ENGINEER FOR REVIEW. OBTAIN PERMITS AND PAY ALL FEES. ARRANGE FOR ALL REQUIRED INSPECTIONS AND APPROVALS. CONFIRM ALL UTILITY COMPANY REQUIREMENTS AND CONNECTION POINTS IN FIELD, PRIOR TO STARTING WORK.

2. ALL SPECIFICATIONS AND DRAWINGS, I.E., ARCHITECTURAL, MECHANICAL, PLUMBING, AND ELECTRICAL ARE COMPLIMENTARY AND MUST BE USED IN COMBINATION TO OBTAIN COMPLETE CONSTRUCTION INFORMATION. ANY INFORMATION CONFLICTS WITHIN THE SPECIFICATIONS AND DRAWINGS SHALL BE BROUGHT TO THE ENGINEER'S ATTENTION. DRAWINGS ARE DIAGRAMMATIC. CONFIRM ALL DIMENSIONS BY FIELD MEASUREMENT. THE EXACT LOCATIONS FOR APPARATUS, FIXTURES, EQUIPMENT AND PIPING WHICH IS NOT COVERED BY DRAWINGS, SHALL BE OBTAINED FROM THE ARCHITECT OR HIS REPRESENTATIVE IN THE FIELD, AND THE WORK SHALL BE LAID OUT ACCORDINGLY.

3. WORK SHALL BE EXECUTED IN A GOOD WORKMANLIKE MANNER USING MECHANICS SKILLED IN THEIR RESPECTIVE TRADES. ALL EQUIPMENT AND MATERIALS SHALL BE NEW, FREE OF DEFECTS. SYSTEMS ARE TO BE COMPLETE AND WORKABLE IN ALL RESPECTS, PLACED IN OPERATION AND PROPERLY ADJUSTED.

4. MAINTAIN THE CONSTRUCTION PREMISES IN A NEAT AND ORDERLY CONDITION AT THE END OF EACH WORKING DAY. CLEAN-UP, REMOVE AND LEGALLY DISPOSE OF ALL RUBBISH DAILY. CONTRACTOR SHALL PROTECT THEIR WORK AND EXISTING OR ADJACENT PROPERTY AGAINST WEATHER, TO MAINTAIN THEIR WORK, MATERIALS, APPARATUS AND FIXTURES FREE FROM INJURY OR DAMAGE. ANY WORK DAMAGED BY FAILURE TO PROVIDE PROTECTION REQUIRED, SHALL BE REMOVED AND REPLACED WITH NEW WORK AT THE CONTRACTOR'S EXPENSE.

5. THE CONTRACTOR IS SOLELY RESPONSIBLE FOR THE SAFETY OF HIS WORKERS, ALL CONSTRUCTION MEANS, METHODS, TECHNIQUES, SEQUENCES AND PROCEDURES FOR COORDINATING THE WORK UNDER THIS CONTRACT. CONFORM TO ALL GENERAL AND SPECIAL CONDITIONS OF CONTRACT AS SPECIFIED BY ARCHITECT AND/OR OWNER.

6. IN CASES OF DOUBT AS TO THE WORK INTENDED, OR IN THE EVENT OF NEED FOR EXPLANATION THEREOF, THE CONTRACTOR SHALL REQUEST SUPPLEMENTARY INSTRUCTIONS FROM THE ENGINEER. NO CHANGES ARE TO BE MADE TO THE WORK OF THIS CONTRACT WITHOUT PRIOR KNOWLEDGE AND APPROVAL OF THE ENGINEER. THE CONTRACTOR SHALL HOLD THE OWNER AND ITS CONSULTANTS HARMLESS AGAINST ALL CLAIMS AND JUDGMENTS ARISING OUT OF THE CONTRACTORS PERFORMANCE OF THE WORK OF THIS CONTRACT. THE CONTRACTOR SHALL NOT PROCEED WITH ANY WORK, WHICH HE EXPECTS ADDITIONAL COMPENSATION BEYOND THE CONTRACT AMOUNT, WITHOUT WRITTEN AUTHORIZATION FROM THE APPROPRIATE AUTHORITY. FAILURE TO OBTAIN SUCH AUTHORIZATION SHALL INVALIDATE ANY CLAIM FOR EXTRA COMPENSATION.

7. ALL PRODUCTS LOCATED WITHIN PLENUM AREAS, INCLUDING BUT NOT LIMITED TO INSULATION AND ADHESIVE SYSTEMS, SHALL HAVE A COMPOSITE FIRE HAZARD RATING NOT TO EXCEED 25 FLAME SPREAD AND 50 SMOKE DEVELOPED PER ASTM E-84, NFPA 255 AND UL 723.

8. IT SHALL BE THE RESPONSIBILITY OF THIS CONTRACTOR TO INSTALL THE PLUMBING SYSTEM SO AS TO ENSURE QUIET OPERATION. NO VIBRATION OR SOUND SHALL BE TRANSMITTED TO THE BUILDING, STRUCTURE OR OCCUPIED AREAS. THE DECISION OF THE ENGINEER AS TO THE QUIETNESS OF THE SYSTEM AND EQUIPMENT SHALL BE FINAL. IT SHALL BE THIS CONTRACTORS' RESPONSIBILITY TO CORRECT OR REPLACE ANY NOISY SYSTEM OR EQUIPMENT AS REQUIRED.

BASIS OF DESIGN AND SUBSTITUTIONS

1. MANUFACTURERS LISTED ARE BASIS OF DESIGN. SUBSTITUTIONS ARE SUBJECT TO THE APPROVAL OF THE OWNER, ARCHITECT & ENGINEER. IF SUBSTITUTION IS SUBMITTED, IT IS THE CONTRACTOR'S RESPONSIBILITY TO EVALUATE IT AND CERTIFY THAT THE SUBSTITUTION IS EQUIVALENT IN ALL RESPECTS TO THE BASIS OF DESIGN. WHERE SUBMITTALS VARY FROM THE CONTRACT REQUIREMENTS, THE CONTRACTOR SHALL CLEARLY INDICATE ON SUBMITTAL OR ACCOMPANYING DOCUMENTS THE NATURE AND REASON FOR VARIATIONS. IF SUBSTITUTIONS ARE APPROVED, NOTIFY ALL OTHER CONTRACTORS, SUBCONTRACTORS OR TRADES AFFECTED BY SUBSTITUTION AND FULLY COORDINATE. ANY COSTS RESULTING FROM SUBSTITUTION, WHETHER BY CONTRACTOR OR OTHERS, SHALL BE RESPONSIBILITY OF AND PAID FOR BY SUBSTITUTING CONTRACTOR. APPROVED SHOP DRAWINGS DOES NOT ABSOLVE THIS CONTRACTOR FROM THIS RESPONSIBILITY. APPROVAL OF SUBSTITUTIONS IS AT THE DISCRETION OF THE ARCHITECT & ENGINEER AND IF SUBMITTED AFTER THE BID, AT THE RISK OF THE CONTRACTOR.

SHOP DRAWING SUBMITTALS

1. COORDINATE, PREPARE AND SUBMIT SHOP DRAWINGS TO THE ARCHITECT AND ENGINEER FOR THEIR REVIEW. CONTRACTOR SHALL REVIEW AND INDICATE HIS APPROVAL OF EACH SHOP DRAWING PRIOR TO SUBMITTAL FOR REVIEW. DO NOT ORDER, START WORK OR FABRICATION UNTIL SHOP DRAWINGS HAVE BEEN REVIEWED BY THE ENGINEER AND RETURNED TO THE CONTRACTOR. SHOP DRAWINGS TO BE SUBMITTED INCLUDE BUT NOT LIMITED TO:
   ALL DRAINS AND ACCESSORIES
   PLUMBING FIXTURES AND ACCESSORIES
   VALVES & PIPING
   INSULATION
   PUMPS, WATER HEATERS, TANKS AND ALL EQUIPMENT

2. INDICATE THE OPERATING CHARACTERISTICS FOR EACH REQUIRED ITEM. PROVIDE ADEQUATE DETAILS AND SCALES TO CLEARLY SHOW CONSTRUCTION. CLEARLY IDENTIFY EACH ITEM ON THE SUBMITTAL AS TO MARK, LOCATION AND USE, USING SAME IDENTIFICATION AS PROVIDED ON DESIGN DRAWINGS. ELECTRONIC SUBMITTALS SHALL BE PRESENTED WITH ALL SHEETS IN ALPHANUMERIC ORDER AND ALL SHEETS ORIENTED WITH TOP OF SHEET UP.

3. SUBMITTALS WILL BE REVIEWED ONLY FOR GENERAL COMPLIANCE WITH THE CONTRACT DRAWINGS AND NOT FOR DIMENSIONS OR QUANTITIES. THE SUBMITTAL REVIEW SHALL NOT RELIEVE THE CONTRACTOR OF RESPONSIBILITY FOR PURCHASE OF ANY ITEM IN FULL COMPLIANCE WITH THE CONTRACT DRAWINGS OR ITS COMPLETE AND PROPER INSTALLATION.

RECORD DRAWINGS

1. A SET OF MEP RECORD/COORDINATION DRAWINGS SHALL BE MAINTAINED IN THE GENERAL CONTRACTORS OFFICE AT THE JOB SITE. PRINTS SHALL INDICATE ADDITIONS, DELETIONS, VARIATIONS IN LOCATION, VARIATIONS IN NUMBERING ETC. ALTERATIONS SHALL BE MARKED IN RED AND DELETIONS SHALL BE MARKED IN GREEN AND SHALL BE ON THE LATEST CONTRACT DRAWING ISSUED. RECORD DRAWINGS SHALL BE KEPT CLEAN AND UNDAMAGED AND SHALL NOT BE USED FOR ANY PURPOSE OTHER THAN RECORDING DEVIATIONS FROM WORKING DRAWINGS. AFTER THE PROJECT IS COMPLETED, THESE SETS OF DRAWINGS SHALL BE DELIVERED TO THE ARCHITECT IN GOOD CONDITION, AS A PERMANENT RECORD OF THE INSTALLATION AS ACTUALLY CONSTRUCTED.

EQUIPMENT & FIXTURES

1. ALL PACKAGED EQUIPMENT SHALL BE INDEPENDENTLY THIRD PARTY LABELED AS A SYSTEM FOR ITS INTENDED USE BY A NATIONALLY RECOGNIZED TESTING LABORATORY (NRTL) IN ACCORDANCE WITH OSHA FEDERAL REGULATIONS 29CFR1910.303 AND .399, AS WELL AS NFPA PAMPHLET NO. 70, AND THE NATIONAL ELECTRICAL CODE (NEC), ARTICLE 90-7.

2. MAKE ALL FINAL EQUIPMENT AND FIXTURE CONNECTIONS AND PROVIDE THE NECESSARY ADAPTORS, FITTINGS, VALVES, DEVICES, ETC. FOR A COMPLETE AND OPERABLE SYSTEM. PROVIDE COMPLETE WITH BASES, ISOLATORS, SUPPORTS AND OTHER REQUIRED ACCESSORIES. PROVIDE VALVES AND UNIONS WHERE NEEDED TO PERMIT DISCONNECTIONS OF EACH PIECE OF EQUIPMENT FOR REPAIRS. PLUMBING CONNECTIONS SHOWN ARE NOMINAL. VERIFY EXACT CONNECTION SIZE WITH EACH PIECE OF EQUIPMENT SUPPLIED. FOLLOW FIXTURE MANUFACTURER'S RECOMMENDED INSTALLATION INSTRUCTIONS, AND ROUGH-IN DIMENSIONS. REFER TO CONSULTANT AND ARCHITECTURAL DRAWINGS FOR ADDITIONAL INFORMATION. COORDINATE WITH THE EQUIPMENT SUPPLIER FOR ADDITIONAL INFORMATION.

3. EQUIPMENT SHALL BE INSTALLED IN FULL ACCORDANCE WITH THE MANUFACTURER'S DATA AND INSTALLATION INSTRUCTIONS, INCLUDING CLEARANCES; LUBRICATE AND ADJUST AS REQUIRED. IT IS THIS CONTRACTOR'S RESPONSIBILITY TO CHECK AND CONFORM TO THESE REQUIREMENTS PRIOR TO STARTING WORK. FURNISH AND INSTALL CLEAN SET OF FILTERS PRIOR TO BALANCING.

4. THE CONTRACTOR SHALL COORDINATE ELECTRICAL CHARACTERISTICS OF ALL PLUMBING EQUIPMENT PRIOR TO ORDERING OF EQUIPMENT. COORDINATE REQUIREMENT FOR PROVISION OF MOTOR STARTERS, DISCONNECTS, CONTACTORS, CONTROL WIRING, ETC. AS REQUIRED FOR PROPER FUNCTIONING SYSTEM WITH ELECTRICAL CONTRACTOR. NO ADDITIONAL PAYMENT WILL BE MADE FOR LACK OF CONTRACTOR COORDINATION OF ELECTRICAL CHARACTERISTICS. REFER TO DIVISION OF WORK SCHEDULE FOR COMPLETE LIST OF RESPONSIBILITIES.

5. ALL FLOOR MOUNTED EQUIPMENT SHALL BE INSTALLED ON CONCRETE HOUSEKEEPING PADS. MINIMUM PAD THICKNESS SHALL BE NOMINAL 4". PAD SHALL EXTEND BEYOND THE EQUIPMENT A MINIMUM OF 4" ON EACH SIDE. CONCRETE PADS SHALL BE PROVIDED BY THIS CONTRACTOR. IT SHALL BE THE RESPONSIBILITY OF THE THIS CONTRACTOR TO COORDINATE THE SIZE AND LOCATION OF THE CONCRETE HOUSEKEEPING PADS WITH THE GENERAL CONTRACTOR.

6. ALL EQUIPMENT SHALL BE MOUNTED ON VIBRATION ISOLATORS TO PREVENT THE TRANSMISSION OF VIBRATION AND MECHANICALLY TRANSMITTED SOUND TO THE BUILDING STRUCTURE.

7. ISOLATION EQUIPMENT SHALL BE THE PRODUCT OF A SINGLE MANUFACTURER AND SHALL BE DESIGNED SPECIFICALLY FOR THE APPLICATION REQUIRED. THIS INCLUDES, BUT IS NOT LIMITED TO, PIPING DUCTWORK, PUMPS, COMPRESSORS. VIBRATION ISOLATORS SHALL BE RATED FOR THE WEIGHT AND SPACING REQUIRED FOR THE EQUIPMENT REQUIRING ISOLATION.

8. ALL CONDENSATE DRAINS SHALL BE TRAPPED PER DETAIL ON MECHANICAL DRAWINGS. PROVIDE CLEANOUT(S). PROVIDE AUXILIARY DRAIN PANS AT ALL EQUIPMENT WHERE DAMAGE TO ANY BUILDING COMPONENT COULD OCCUR AS A RESULT OF OVERFLOW OR STOPPAGE OF THE PRIMARY SYSTEM. WATER LEVEL DETECTION SHALL BE PROVIDED IN AUXILIARY PAN TO PROVIDE SHUT DOWN OF EQUIPMENT.

9. PROVIDE CURBS FOR ALL ROOF OPENINGS FOR DUCTS, FLUES, PIPING AND EQUIPMENT. CURBS SHALL BE FURNISHED AS ACCESSORIES TO THE EQUIPMENT OR 8" HIGH PATE OR EQUAL EQUIPMENT SUPPORTS SPANNING STRUCTURE AND FLASHED INTO ROOFING. ALL CUTTING, FLASHING, AND PATCHING OF ROOF SHALL BE BY OWNER'S ROOFING CONTRACTOR AND PAID FOR BY PLUMBING CONTRACTOR.

10. SEAL JOINTS BETWEEN PLUMBING FIXTURES AND THE SURFACE TO WHICH THEY ARE MOUNTED USING SANITARY-TYPE, ONE-PART, MILDEW RESISTANT SILICONE SEALANT. MATCH SEALANT COLOR TO FIXTURE COLOR.

PIPING SYSTEMS

1. INSTALL PIPING SYSTEMS TO PERMIT FREE MOVEMENT FOR EXPANSION. SUPPORT ALL PIPING FROM STRUCTURE WITH UL LISTED HANGERS AND SUPPORTS SUITABLE FOR THE INTENDED INSTALLATION. DESIGN, SELECTION, SPACING, AND APPLICATION OF HANGERS AND SUPPORTS SHALL COMPLY WITH ANSI B31.1, MSS SP-69, AND PIPE MANUFACTURER'S RECOMMENDED SPACING REQUIREMENTS.

2. PROVIDE INSULATION HANGER WITH PROTECTIVE SHIELDS ON SYSTEMS REQUIRING A VAPOR BARRIER. HANGER SHALL BE PROVIDED AT EACH CHANGE OF DIRECTION. HANGERS AND SUPPORTS SHALL BE SPACED AT INTERVALS WHICH WILL PREVENT SAGGING AND REDUCE STRAIN ON VALVES AND SPECIALTIES; ALL PIPING SUPPORTS AND RESTRAINTS SHALL BE IN STRICT ACCORDANCE WITH THE PIPE MANUFACTURER'S RECOMMENDATIONS AND INSTALLATION GUIDELINES. HANGERS SHALL ALLOW FOR EXPANSION AND CONTRACTION.

3. RISER CLAMPS SHALL BE INSTALLED ABOVE THE FLOOR AT EACH LEVEL. RISER CLAMPS MAY BE SUSPENDED BELOW FLOOR LEVEL, WITH HANGER RODS AND INSERTS, WHERE THE INSTALLATION OF ESCUTCHEON PLATES IS REQUIRED.

4. PROVIDE VALVES AND UNIONS WHERE NEEDED TO PERMIT DISCONNECTIONS OF EACH PIECE OF EQUIPMENT FOR REPAIRS. MAKE CONNECTIONS TO EQUIPMENT WITH SHUT-OFF VALVES ON SUPPLY AND BALANCE VALVES ON RETURNS. INSTALL UNIONS IN PIPES 2" AND SMALLER, ADJACENT TO EACH VALVE, AT FINAL CONNECTIONS EACH PIECE OF EQUIPMENT AND ELSEWHERE AS INDICATED. UNIONS ARE NOT REQUIRED ON FLANGED DEVICES.

5. LEVER TYPE HANDLE OPERATORS SHALL BE PROVIDED ON VALVES UP TO 4". GEAR OPERATORS SHALL BE PROVIDED ON VALVES OVER 4", AND ON VALVES REQUIRING CHAIN OPERATION. VALVES USED FOR BALANCING SHALL HAVE INFINITE POSITION LEVER OR GEAR OPERATORS WITH ADJUSTABLE, OPEN POSITION "MEMORY" STOP. PROVIDE 2" EXTENSION NECKS ON ALL VALVES INSTALLED IN INSULATED LINES.

6. CONNECTIONS BETWEEN DISSIMILAR PIPING MATERIALS SHALL BE MADE WITH SUITABLE DIELECTRIC INSULATING FITTINGS. ISOLATE COPPER PIPING FROM DISSIMILAR METALS, SUCH AS METAL STUDS AND VENT PIPING.

7. ALL PIPING SHALL RUN CONCEALED ABOVE CEILING OR IN WALL CHASE, UNLESS OTHERWISE NOTED. EXPOSED PIPING SHALL BE 3/4 INCH MINIMUM FROM ANY WALL SURFACE. EXCEPT WHERE OTHERWISE INDICATED ON THE DRAWINGS, PIPING IS SHOWN ON THE FLOOR WHERE IT ACTUALLY OCCURS IN THE BUILDING.

DOMESTIC WATER SYSTEMS

1. POTABLE WATER PIPING AND COMPONENTS SHALL COMPLY WITH NSF 14, NSF 372, AND NSF 61 ANNEX G. PLASTIC PIPING COMPONENTS SHALL BE MARKED WITH "NSF-PW." GASKETS, JOINTS, CONNECTORS, SPECIALTIES, AND PIPE SHALL BE MANUFACTURED AND PROVIDED BY THE SAME MANUFACTURER. ALL PIPING SHALL BE SUPPORTED DIRECTLY ON EACH SIDE OF A JOINT. ALL PIPING SUPPORTS AND RESTRAINTS SHALL BE IN STRICT ACCORDANCE WITH THE PIPE MANUFACTURER'S RECOMMENDATIONS AND INSTALLATION GUIDELINES.

2. ALL DOMESTIC WATER PIPING SHALL BE TYPE L HARD DRAWN SEAMLESS COPPER WATER TUBE. COPPER TUBE FITTINGS SHALL BE WROUGHT COPPER JOINT FITTINGS CONFORMING TO ASTM B88. SOLDERED COPPER JOINTS SHALL BE SOLDERED WITH LEAD FREE ASTM B32 GRADE 95T TIN-ANTIMONY SOLDER. AS AN OPTION FOR ABOVE GRADE PIPING 2"Ø AND SMALLER, COPPER PIPE FITTINGS MAY BE PRESS-CONNECT CAST-BRONZE OR WROUGHT-COPPER FITTING WITH EPDM-RUBBER, O-RING SEAL IN EACH END. PRESS-CONNECT FITTINGS SHALL CONFORM TO ASME B16.51 STANDARD. CONTRACTOR SHALL BE CERTIFIED BY THE PRESS CONNECT MANUFACTURER AS A CERTIFIED INSTALLER; PROOF OF CERTIFICATION SHALL BE SUBMITTED TO ENGINEER FOR REVIEW AS PART OF THE SUBMITTAL PROCESS.

3. REDUCED PRESSURE BACKFLOW PREVENTION ASSEMBLY SHALL BE WATTS NO# LF909-S SERIES OR APPROVED EQUAL. IF IT COMPLIES WITH THESE SPECIFICATIONS EQUIPMENT MANUFACTURED BY CLA-VAL COMPANY, FEBCO, HERSEY PRODUCTS, INC., OR WATTS REGULATION COMPANY WILL BE ACCEPTABLE. ASSEMBLY SHALL BE COMPLETE WITH STRAINER, DRAIN LINES, INLET AND OUTLET SHUT-OFF VALVES AND WATTS SERIES 'AG' AIR GAP. THE PRESSURE LOSS OVER THE ENTIRE ASSEMBLY SHALL NOT EXCEED 10 PSI AT THE DESIGN FLOW. THE SIZE OF THE ASSEMBLY SHALL NOT BE SMALLER THAN THE LINE SIZE IN WHICH IT IS INSTALLED. BACKFLOW PREVENTER ASSEMBLY SHALL BE INSTALLED IN AN ACCESSIBLE LOCATION. RELIEF OUTLET PIPE SHALL DISCHARGE TO NEAREST FLOOR DRAIN OR OTHER APPROVED LOCATION OF DISCHARGE. DO NOT INSTALL ABOVE FINISHED CEILINGS, UNLESS NOTED OR INDICATED OTHERWISE.

4. DOMESTIC WATER GATE VALVES FOR COPPER PIPING UP TO AND INCLUDING 2-1/2 INCHES SHALL BE NIBCO NO. S-111 OR APPROVED EQUAL, CLASS 125, 200 PSIG WOG, BRONZE BODY WITH SOLDERED ENDS, RISING STEM, SOLID WEDGE AND SCREWED BONNET. DOMESTIC WATER GATE VALVES FOR COPPER PIPING 3 INCHES AND 4 INCHES SHALL BE CRANE NO. 465-1/2 OR APPROVED EQUAL, 200# WOG CAST IRON OS&Y VALVE WITH CLASS 125 ANSI B16.1 FLAT FACED FLANGED ENDS AND BRONZE TRIM: STEMS, DISC FACES, SEAT FACES, SEAT RINGS AND BONNET BUSHINGS CONSTRUCTED OF BRONZE. ALL OF THE ABOVE GATE VALVES SHALL BE USED FOR STOP OR ISOLATION VALVE APPLICATIONS. IN LIEU OF GATE VALVES FOR PIPING 2 INCHES AND SMALLER, NIBCO 585-70 BALL VALVES MAY BE USED.

5. GLOBE VALVES FOR COPPER PIPING UP TO AND INCLUDING 2-1/2 INCHES SHALL BE NIBCO NO. S-235 OR APPROVED EQUAL, CLASS 150, 300# WOG, BRONZE BODY, BRONZE RISING STEM, UNION BONNET, RENEWABLE SEAT AND SOLDERED ENDS. DOMESTIC WATER GLOBE VALVES FOR COPPER PIPING 3 INCHES AND 4 INCHES SHALL BE CRANE NO. 351 OR APPROVED EQUAL, CLASS 125, 200# WOG CAST IRON OS&Y VALVES WITH ANSI B16.1 FLANGED ENDS, YOKE BONNET, RENEWABLE SEAT AND BRONZE TRIM: STEMS, DISC FACES, SEAT FACES AND BUSHINGS CONSTRUCTED OF BRONZE. ALL OF THE ABOVE GLOBE VALVES SHALL BE USED FOR BALANCING OR THROTTLING VALVE APPLICATIONS.

6. DOMESTIC WATER SHUT-OFF VALVES INSTALLED ON COPPER PIPING SHALL BE TWO PIECE, FULL PORT, WITH BRASS BODY, STAINLESS STEEL BALL AND TRIM, BLOW-OUT PROOF STEM, AND REPLACEABLE "TEFLON OR TFE" SEATS AND SEALS. VALVES SHALL BE NIBCO OR EQUAL. PROVIDE VALVE HANDLE EXTENSIONS FOR ALL INSULATED BALL VALVES.

7. DOMESTIC WATER PRESSURE REDUCING VALVE ASSEMBLIES SHALL BE SELECTED TO PROVIDE STABLE FLOW CONDITIONS WITHOUT CAVITATION OR VALVE CHATTER.

8. SHOCK ARRESTORS SHALL BE LOCATED DOWNSTREAM OF THE DOMESTIC WATER SERVICE VALVE, AT EACH SERVICE TO A GROUP OF FIXTURES, OR AS INDICATED ON THE DRAWINGS. SHOCK ARRESTORS SHALL BE AS MANUFACTURED BY PRECISION PLUMBING PRODUCTS OR APPROVED EQUAL AND CONFORM TO THE REQUIREMENTS OF THE PLUMBING AND DRAINAGE INSTITUTE.

9. PROVIDE STOP VALVES AT ALL FIXTURE AND EQUIPMENT SUPPLIES. ALL EXPOSED FIXTURE CONNECTIONS SHALL BE CHROME PLATED, STAINLESS STEEL OR FITTED WITH CHROME PLATED SLEEVES. PROVIDE VACUUM BREAKERS WHERE REQUIRED BY CODE.

10. ALL COLD WATER, HOT WATER, AND HOT WATER RETURN PIPING THAT IS PART OF A NEW SYSTEM OR AN ADDITION OF AN EXISTING SYSTEM SHALL BE THOROUGHLY CLEANED AND DISINFECTED AS PER AWWA C651 OR AWWA C652 GUIDELINES. THE DISINFECTION PROCESS SHALL BE PERFORMED AFTER ALL PIPES, COMPONENTS, VALVES, AND FIXTURES ARE INSTALLED AND THE REQUIRED LEAK/PRESSURE TESTS HAVE BEEN COMPLETED. THE SYSTEM SHALL BE FLUSHED WITH CLEAN, POTABLE WATER UNTIL THE SYSTEM IS COMPLETELY CLEAR OF ALL DIRT, SEDIMENT, AND DEBRIS. THE SYSTEM SHALL BE FILLED WITH A WATER/CHLORINE SOLUTION AS PER CODE AND SHALL BE VALVED OFF FROM THE MAIN WATER SUPPLY AND ALLOWED TO STAND FOR A MINIMUM OF 24 HOURS. AFTER THE REQUIRED STANDING TIME, THE SYSTEM SHALL BE FLUSHED WITH CLEAN POTABLE WATER UNTIL THE DISINFECTANT SOLUTION IS COMPLETELY PURGED FROM THE SYSTEM, FIXTURES, AND COMPONENTS. REPEAT DISINFECTION PROCEDURE AS NEEDED IF BACTERIOLOGICAL EXAMINATION INDICATES THAT CONTAMINATES ARE STILL PRESENT IN THE SYSTEM. CONTRACTOR SHALL PROVIDE FINAL STERILIZATION TESTING REPORT TO THE ENGINEER FOR REVIEW.

11. IF CONTRACTOR CHOOSES PRESS-CONNECT OPTION: AFTER PRESS-CONNECT FITTINGS HAVE BEEN INSTALLED A "TWO STEP TEST" SHALL BE FOLLOWED. PRESSURIZE THE SYSTEM WITH APPLICATION APPROPRIATE TEST MEDIUM, WATER BETWEEN 15 AND 85 PSI, OR AIR/DRY NITROGEN BETWEEN .5 AND 45 PSI. CHECK THE PRESSURE GAUGE FOR PRESSURE LOSS. IF THE SYSTEM DOES NOT HOLD PRESSURE, WALK THE SYSTEM AND CHECK FOR UN-PRESSED FITTINGS. SHOULD ANY UNPRESSED FITTINGS BE IDENTIFIED FOLLOWING TEST, ENSURE THE TUBE IS FULLY INSERTED INTO THE FITTING AND PROPERLY MARKED PRIOR TO PRESSING THE JOINT. AFTER APPROPRIATE REPAIRS HAVE BEEN MADE, RETEST THE SYSTEM PER LOCAL CODE AND SPECIFICATION REQUIREMENTS, NOT TO EXCEED 600 PSI WITH WATER OR, 200 PSI WHEN USING AIR.

SANITARY DRAINAGE SYSTEMS

1. GASKETS, JOINTS, CONNECTORS, SPECIALTIES AND PIPE SHALL BE MANUFACTURED AND PROVIDED BY THE SAME MANUFACTURER. ALL PIPING SUPPORTS AND RESTRAINTS SHALL BE IN STRICT ACCORDANCE WITH THE DRAINAGE PIPE MANUFACTURER'S RECOMMENDATIONS AND INSTALLATION GUIDELINES.

2. ALL NEW BELOW GRADE SANITARY, SOIL, WASTE, AND VENT PIPING SHALL BE SERVICE WEIGHT CAST IRON, BELL AND SPIGOT, PIPE AND FITTINGS CONFORMING TO ASTM A74 AND AS MANUFACTURED BY TYLER PIPE AND FOUNDRY CO., U.S. PIPE AND FOUNDRY CO., CENTRAL FOUNDRY OR APPROVED EQUAL. TYLER "TY-SEAL" OR APPROVED EQUAL, NEOPRENE POSITIVE SEAL ELASTOMERIC COMPRESSION TYPE GASKETS SHALL BE USED AT ALL JOINTS. AS AN OPTION, ALL NEW BELOW GRADE SANITARY, SOIL, WASTE, VENT AND STORM WATER PIPING SHALL BE PVC PIPE, ASTM D3034, SCHEDULE 40 OR HEAVIER, WITH SOLVENT WELD JOINTS. FOAM CORE PVC PIPING SHALL NOT BE ACCEPTABLE.

3. ALL NEW ABOVE GROUND SANITARY, SOIL, WASTE, AND VENT PIPING SHALL BE SERVICE WEIGHT CAST IRON, BELL AND SPIGOT, PIPE AND FITTINGS, CONFORMING TO ASTM A74 AND AS MANUFACTURED BY TYLER PIPE AND FOUNDRY CO., U.S. PIPE AND FOUNDRY CO., CENTRAL FOUNDRY OR APPROVED EQUAL. TYLER "TY-SEAL" OR APPROVED EQUAL, NEOPRENE POSITIVE SEAL ELASTOMERIC COMPRESSION TYPE GASKETS SHALL BE USED AT ALL JOINTS. IN ADDITION, ALL VENT PIPING MAY BE DWV COPPER PIPE AND FITTINGS WITH SOLDERED JOINTS.
- (OPTION #1) ALL NEW ABOVE GROUND SANITARY, SOIL, WASTE, AND VENT PIPING 6 INCHES AND SMALLER MAY USE HUBLESS, SERVICE WEIGHT SCHEDULE 40, CAST IRON PIPE, FITTINGS AND JOINTS WITH TYLER "NO-HUB" STAINLESS STEEL CONNECTORS. HUBLESS CAST IRON PIPE AND FITTINGS SHALL BE MANUFACTURED FROM GRAY CAST IRON AND SHALL CONFORM TO ASTM A74, ASTM A888, AND CISPI STANDARDS.

4. EXCEPT WHERE OTHERWISE INDICATED, HORIZONTAL SANITARY, SEWAGE AND WASTE PIPING SHALL SLOPE AT 1/4 INCH PER FOOT FOR PIPES 2 INCHES AND SMALLER, PIPES 3 INCHES AND LARGER SHALL SLOPE AT 1/8 INCH PER FOOT. ALL VERTICAL SANITARY SEWER AND STORM WATER PIPING, WHICH TURN 90º AFTER PASSING THROUGH A FLOOR, SHALL BE INSTALLED AS TIGHT AS POSSIBLE TO THE UNDERSIDE OF THE STRUCTURE.

5. CLEAN-OUTS SHALL BE PROVIDED IN PIPING AT EACH CHANGE IN DIRECTION, IN ALL HORIZONTAL STRAIGHT RUNS MORE THAN 50 FEET LONG OR AS ALLOWED BY CODE, AND AT ALL OTHER LOCATIONS AS NOTED ON THE DRAWINGS. ALL CLEAN-OUTS SHALL BE THE SAME SIZE AS THE PIPE DIAMETER UP TO AND INCLUDING PIPE 4 INCHES IN DIAMETER. FOUR INCH CLEAN-OUTS SHALL BE USED FOR ALL PIPE LARGER THAN 4 INCHES, UNLESS NOTED OTHERWISE. ALL CLEAN-OUT LOCATIONS SHALL BE NO MORE THAN 5 FEET ABOVE THE BASE OF THE HORIZONTAL OFFSET AND BE APPROVED BY THE ARCHITECT. FOR CARPETED AREAS, PROVIDE A PERMANENT IDENTIFYING MARK IN THE CARPET DIRECTLY ABOVE THE CLEAN-OUT. THE CLEAN-OUT SHALL HAVE A SMOOTH POLISHED BRONZE FINISH WITH THE LETTERS "C.O." CAST IN THE COVER. FOR WALLS, PROVIDE AN ACCESS PANEL WITH CLEARANCE FOR RODDING. THE FLOOR CLEAN-OUTS SHALL BE ZURN MODEL ZN-1400-T OR APPROVED EQUAL WITH BRONZE PLUG, SQUARE NICKEL BRONZE FRAME AND COVER. THE WALL CLEAN-OUTS SHALL BE ZURN MODEL ZN-1443-BP OR APPROVED EQUAL WITH BRONZE PLUG AND 7 INCHES X 7 INCHES NICKEL BRONZE COVER. NO SANITARY, SOIL OR WASTE PIPE SHALL EXTEND GREATER THAN 2'-0" TO A DEAD-END.

6. PROVIDE ONE TRAP PRIMER VALVE FOR EACH FLOOR DRAIN WITHOUT A CONSTANT SOURCE OF WATER SUPPLY TO MAINTAIN TRAP SEAL. PRIMER VALVE SHALL BE LOCATED IN AN ACCESSIBLE AREA AND CONNECTED TO THE NEAREST 3/4 INCH COLD WATER LINE SERVING A FIXTURE. TRAP PRIMER VALVE SHALL CONFORM TO ASSE 1018 AND 1044. BARRIER TYPE TRAP SEAL PROTECTION DEVICES COMPLYING WITH ASSE 1072 MAY BE USED IN LIEU OF TRAP PRIMER VALVES AS ALLOWED BY LOCAL CODE AND AHJ. PROVIDE FLOAT TYPE BACKWATER VALVE (SIZED FOR ANTICIPATED FLOW RATE) IN ALL OPEN SITE DRAINS AND FLOOR RECEPTORS RECEIVING A/C UNIT CONDENSATE, AND/OR CLEAR WATER WASTE, SUCH AS SPRINKLER FLOW TESTING.

INSULATION

1. REFER DOMESTIC PIMPING INSULATION SCHEDULE FOR PIPING INSULATION REQUIREMENTS.

2. CONDENSATE PIPING SHALL BE INSULATED WITH 1 INCH THICK FIBERGLASS INSULATION WITH STANDARD VAPOR BARRIER JACKET OR WITH 1" THICK FLEXIBLE UNICELLULAR ("ARMAFLEX").

3. FIBERGLASS PIPE INSULATION SHALL BE PROVIDED WITH STANDARD VAPOR BARRIER JACKET AND HAVE A MAXIMUM CONDUCTIVITY OF 0.27 BTU PER "/HR-FT2-°F. ALL INSULATION SHALL BE APPLIED IN FULL ACCORDANCE WITH THE MANUFACTURER'S RECOMMENDATIONS.

4. INSULATE FITTINGS, JOINTS, AND VALVES WITH INSULATION OF LIKE MATERIAL AND THICKNESS AS ADJOINING PIPE. PROVIDE REMOVABLE INSULATION SECTIONS TO COVER PARTS OF EQUIPMENT WHICH MUST BE OPENED PERIODICALLY FOR MAINTENANCE. FINISH WITH GLASS CLOTH OR PVC FITTING COVERS.

5. ALL PRODUCTS LOCATED WITHIN PLENUM AREAS, INCLUDING BUT NOT LIMITED TO INSULATION AND ADHESIVE SYSTEMS, SHALL HAVE A COMPOSITE FIRE HAZARD RATING NOT TO EXCEED 25 FLAME SPREAD AND 50 SMOKE DEVELOPED PER ASTM E-84, NFPA 255 AND UL 723.

IDENTIFICATION

1. ALL PIPING SYSTEMS, VALVES AND EQUIPMENT SHALL BE PROPERLY IDENTIFIED. ALL VALVES SHALL HAVE THEIR NORMAL (IN OPERATION) POSITION IDENTIFIED, SUCH AS "NORMALLY OPEN" OR "NORMALLY CLOSED".

2. IDENTIFICATION SHALL BE IN ACCORDANCE WITH ANSI STANDARD A13.1. PRESSURE SENSITIVE MARKERS SHALL BE MANUFACTURED BY THE BRADY CO., OR APPROVED EQUAL. MARKERS SHALL BE MANUFACTURER'S STANDARD PRODUCT.

3. PIPE LABEL LOCATIONS: LOCATE PIPE LABELS WHERE PIPING IS EXPOSED OR ABOVE ACCESSIBLE CEILINGS IN FINISHED SPACES; MACHINE ROOMS; ACCESSIBLE MAINTENANCE SPACES SUCH AS SHAFTS, TUNNELS, AND PLENUMS; AND EXTERIOR EXPOSED LOCATIONS AS FOLLOWS:
- NEAR EACH VALVE AND CONTROL DEVICE.
- NEAR EACH BRANCH CONNECTION, EXCLUDING SHORT TAKEOFFS FOR FIXTURES AND TERMINAL UNITS. WHERE FLOW PATTERN IS NOT OBVIOUS, MARK EACH PIPE AT BRANCH.
- NEAR PENETRATIONS AND ON BOTH SIDES OF THROUGH WALLS, FLOORS, CEILINGS, AND INACCESSIBLE ENCLOSURES.
- AT ACCESS DOORS, MANHOLES, AND SIMILAR ACCESS POINTS THAT PERMIT VIEW OF CONCEALED PIPING.
- NEAR MAJOR EQUIPMENT ITEMS AND OTHER POINTS OF ORIGINATION AND TERMINATION.
- SPACED AT MAXIMUM INTERVALS OF 50 FEET (15 m) ALONG EACH RUN. REDUCE INTERVALS TO 25 FEET (7.6 m) IN AREAS OF CONGESTED PIPING AND EQUIPMENT.

CUTTING, PATCHING AND DRILLING

1. ALL CUTTING AND PATCHING OF THE BUILDING CONSTRUCTION REQUIRED FOR THIS WORK SHALL BE BY THIS CONTRACTOR UNLESS SHOWN ON ARCHITECTURAL DRAWINGS AND CONFIRMED AS TO SIZE AND LOCATION PRIOR TO NEW CONSTRUCTION. CUTTING SHALL BE IN A NEAT AND WORKMANLIKE MANNER.

2. NEATLY SAW CUT ALL RECTANGULAR OPENINGS, SET SLEEVE THROUGH OPENING, AND FINISH PATCH OR PROVIDE TRIM FLANGE AROUND OPENING. CORE DRILL AND SLEEVE ALL ROUND OPENINGS.

3. DO NOT CORE DRILL OR CUT ANY CONCRETE SLABS OR OTHER STRUCTURAL COMPONENTS FOR ANY REASON WITHOUT THE KNOWLEDGE AND WRITTEN CONSENT OF THE STRUCTURAL ENGINEER, ARCHITECT AND THE OWNER.

4. PATCH AND FINISH TO MATCH ADJACENT AREAS THAT HAVE BEEN CUT, DAMAGED OR MODIFIED AS A RESULT OF THE INSTALLATION OF THE MECHANICAL OR ELECTRICAL EQUIPMENT.

FIRESTOPPING

1. ALL PENETRATIONS OF SLAB-TO-SLAB PARTITIONS SHALL BE SEALED AIRTIGHT.

2. WHEREVER FIRE RATED PARTITIONS ARE PENETRATED FOR WIRE, DUCT, OR PIPE PASSAGE, SEAL PASSAGES WITH CODE APPROVED, LABORATORY TESTED AND LABELED SEALANT OF FIRE RESISTANCE RATING NOT LESS THAN THAT OF PENETRATED ASSEMBLY THAT WILL PREVENT PASSAGE OF FIRE AND SMOKE. ALL FIRE STOPPING SYSTEM SHALL MEET THE REQUIREMENTS OF ASTM E 814,UL 1479, AND BE FACTORY MUTUAL APPROVED. ALL FIRESTOPPING AND/OR SMOKE STOPPING MATERIAL AND INSTALLATION SHALL BE AS MANUFACTURED BY HILTI OR APPROVED EQUAL.

ACCESS DOORS

1. ACCESS DOORS SHALL BE PROVIDED IN WALLS AND CEILINGS WHERE REQUIRED TO PERMIT PROPER ACCESS TO VALVES AND ANY OTHER SUCH DEVICES WHICH REQUIRE MAINTENANCE OR SERVICE. DOORS PLACED IN WALLS, PARTITIONS OR OTHER FIRE-RATED CONSTRUCTION SHALL HAVE A LABEL SIGNIFYING THAT THE DOOR HAS THE SAME FIRE RATING AS THE FIRE-RATED CONSTRUCTION.

2. ACCESS PANELS SHALL BE CONSTRUCTED OF 14 GAUGE STEEL, WITH 16 GAUGE STEEL FRAMES. DOORS SHALL FINISH FLUSH WITH THE SURROUNDING SURFACE. FRAMES SHALL HAVE 3" WIDE EXPANDED METAL FOR PLASTERED SURFACES AND PLAIN FLANGED TYPE FRAME FOR TILE, MASONRY OR GYPSUM BOARD SURFACES. DOORS AND FRAMES SHALL BE FURNISHED PRIME COATED. DOORS INSTALLED IN CERAMIC TILE, WET AREAS, OR OTHER NON-PAINTED SURFACES SHALL BE STAINLESS STEEL. HINGES SHALL BE CONCEALED SPRING TYPE, TO ALLOW DOORS TO BE OPENED 175 DEGREES. LOCKS SHALL BE FLUSH SCREWDRIVER TYPE WITH STEEL CAMS. ACCESS PANELS SHALL BE 16" X 16" OR LARGER AS MAY BE REQUIRED FOR PROPER ACCESS TO THE DEVICE BEING SERVED.

3. ACCESS PANELS ARE NOT REQUIRED IN COMPLETELY ACCESSIBLE LIFT OUT TILE CEILINGS. CONTRACTOR SHALL REVIEW THE ROOM FINISH SCHEDULE ON THE ARCHITECTURAL DRAWINGS IN ORDER TO VERIFY THE NEED FOR ACCESS PANELS. PROVIDE ACCESS PANELS TO GENERAL CONTRACTOR FOR INSTALLATION.

START UP AND INSTRUCTIONS

1. PERFORM A HYDROSTATIC PRESSURE TEST ON ALL PIPING, AT THE PIPING SYSTEM WORKING PRESSURE, FOR A MINIMUM PERIOD OF 24-HOURS. REPAIR ANY LEAKS AND RETEST TO DEMONSTRATE TIGHTNESS. STOP-LEAK COMPOUNDS WILL NOT BE ALLOWED. ALL PIPING FOR PRESSURIZED WATER SYSTEMS SHALL HAVE A MINIMUM PRESSURE RATING OF 150 PSI.

2. AFTER INSTALLATION, CHECK ALL EQUIPMENT, AND PERFORM START UP IN ACCORDANCE WITH THE MANUFACTURER'S INSTRUCTIONS. PLACE ALL SYSTEMS INTO OPERATION.

3. CLEAN ALL PLUMBING EQUIPMENT AND PIPING OF ALL CONSTRUCTION DUST AT PROJECT COMPLETION.

4. PROVIDE OWNER TRAINING AND DEMONSTRATION OF ALL PLUMBING SYSTEMS AND EQUIPMENT. INSTRUCT OWNER ON PROPER OPERATION AND PREVENTATIVE MAINTENANCE OF SYSTEM. SUBMIT OPERATING AND MAINTENANCE MANUAL ON ALL EQUIPMENT AND SYSTEMS.

WARRANTY

1. FULLY WARRANT ALL MATERIALS, EQUIPMENT AND WORKMANSHIP FOR ONE (1) YEAR FROM DATE OF ACCEPTANCE. EXTEND ALL MANUFACTURER'S WARRANTIES TO OWNER, INCLUDING ALL EXTENDED WARRANTIES.

2. REPAIR OR REPLACE WITHOUT CHARGE TO THE OWNER ALL ITEMS FOUND DEFECTIVE DURING THE WARRANTY PERIOD. IN THE CASE OF REPLACEMENT OR REPAIR DUE TO FAILURE WITHIN THE WARRANTY PERIOD, THE WARRANTY ON THAT PORTION OF THE WORK SHALL BE EXTENDED FOR A MINIMUM PERIOD OF ONE (1) YEAR FROM THE DATE OF SUCH REPLACEMENT OR REPAIR.

Oak Park
VILLAGE OF OAK PARK
CONSTRUCTION DOCUMENT(S)
REVIEWED FOR COMPLIANCE

These document(s) has been reviewed for conformance with applicable provisions of the codes and ordinances of the Village of Oak Park. The permit process is a check and balance system that normally involves a licensed designer, plans examiner, contractor, and inspector to ensure the best quality and safest construction possible. As much as the mentioned professionals attempt to achieve full code compliance every effort has been made to identify all code deficiencies however; failure to identify a code deficiency during plan review and inspection does not alleviate any obligation to comply with all applicable code provisions. Ultimately the owner and contractor are responsible for full code compliance.

KEEP A PRINTED APPROVED COPY OF THE PLANS ON SITE AT ALL TIMES FOR CONTRACTORS AND INSPECTORS
- Signage is required to provide the address, contractor name and emergency contact information
- Before you dig call J.U.L.I.E @ 811
- Construction hours are 7:00AM through 6:00PM all seven days a week
- Address numbers shall be posted in the front and in the alley of the site (if applicable)
- Trees shall be protected in the parkways; do not block sidewalks or alleyways
- Portable toilets shall be properly maintained a minimum of 10' from the lot line
- Construction fencing shall secure the site and materials(6' high for res. & 8' high for comm. sites)
- Respect the neighboring properties; do not trespass on or damage neighboring properties
- Keep the site clean, safe, organized and free from debris.
- Maintain all guardrails, walkways, ladders and stairs in a safe condition

Any and all changes and/or deviations to the approved plans shall be proposed in writing, in triplicate, for a complete re-review and re-approval.

625 W Adams Street – 19th Floor
Chicago, IL 60661
312.320.3668

LICENSED PROFESSIONAL ENGINEER
ALEXANDER G. RADKOFF
062-073334
OF ILLINOIS
AGR - 08.22.2025

DESIGN FIRM LIC. NO: 184008703-002
DESIGN FIRM LIC. NO. EXP.: 04.30.2027
ILLINOIS LICENCE NUMBER: 062.073334
LIC. EXP.: 11.30. 2025

--
SIDEWALK VAULT ALTERATIONS

1144 W LAKE ST
OAK PARK, IL 60301

1	PERMIT REVISION 1	08/22/2025
1	ISSUED FOR PERMIT	07/28/2025
NO.	DESCRIPTION	DATE

JOB NO.: 25.068

SCALE:

TITLE: PLUMBING SPECIFICATIONS

SHEET: P0.2

7/24/2025 1:06:19 PM

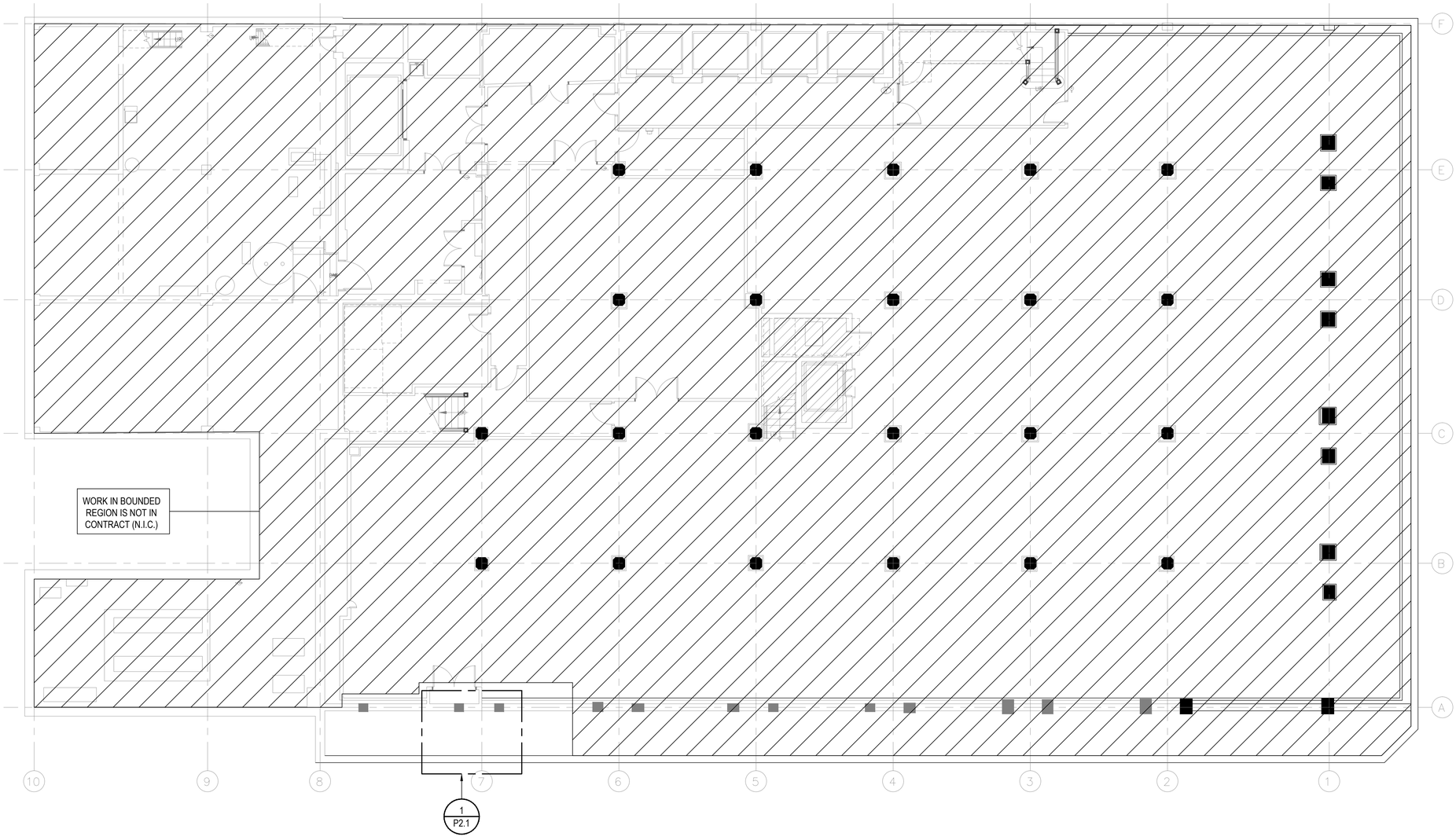

1 / P1.1 BASEMENT OVERALL PLUMBING DEMOLITION PLAN

1/8" = 1'-0"

0 1' 2' 3' 4' 5' 10'

SCALE: 1/8" = 1'-0"

1

VILLAGE OF OAK PARK

CONSTRUCTION DOCUMENT(S)

REVIEWED FOR COMPLIANCE

This document is being provided for the use of the building owner in accordance with the terms of the contract between the owner and the design professional. Other use of this document is prohibited. Reproduction of this document or any part thereof is prohibited without the written permission of the design professional who prepared it. The design professional who prepared this document retains all rights to this document.

KEEP A PRINTED APPROVED COPY OF THE PLANS ON SITE AT ALL TIMES FOR CONTRACTORS AND INSPECTORS

- Permit is required to provide the address, contractor name and emergency contact information.
  - Before you dig call J.U.L.I.E @ 811
- Construction hours are 7:00 AM to 7:00 PM unless written date is reset.
- Address numbers shall be posted in the front and in the alley of the site (if applicable)
  - Trees shall be protected in the parkway; do not block sidewalks or alleyway
- Construction fencing shall be installed around the site and maintained in good condition.
- Construction fencing shall secure the site and maintained legal for one, 8 6" high for secure, sheet
- Respect the neighboring properties, not to trespass on or damage neighboring properties
  - Keep the sidewalk and the street clean and free of debris
  - Maintain all guardrails, railings, ladders and stairs in a safe condition

Any and all changes and/or deviations to the approved plans shall be proposed in writing, in triplicate, for a complete review and resapproval.

625 W Adams Street – 19th Floor
Chicago, IL 60661
312.320.3668

LICENSED PROFESSIONAL ENGINEER
ALEXANDER G. RADKOFF
062-073334
OF ILLINOIS

AGR - 08.22.2025

DESIGN FIRM LIC. NO: 184008703-002
DESIGN FIRM LIC. NO. EXP.: 04.30.2027
ILLINOIS LICENCE NUMBER: 062.073334
LIC. EXP.: 11.30. 2025

--

SIDEWALK VAULT ALTERATIONS

1144 W LAKE ST
OAK PARK, IL 60301

NO.	DESCRIPTION	DATE
1	PERMIT REVISION 1	08/22/2025
1	ISSUED FOR PERMIT	07/28/2025

JOB NO.: 25.068

SCALE:

BASEMENT PLUMBING DEMOLITION PLAN

TITLE:

SHEET: P1.1

7/24/2025 1:06:19 PM

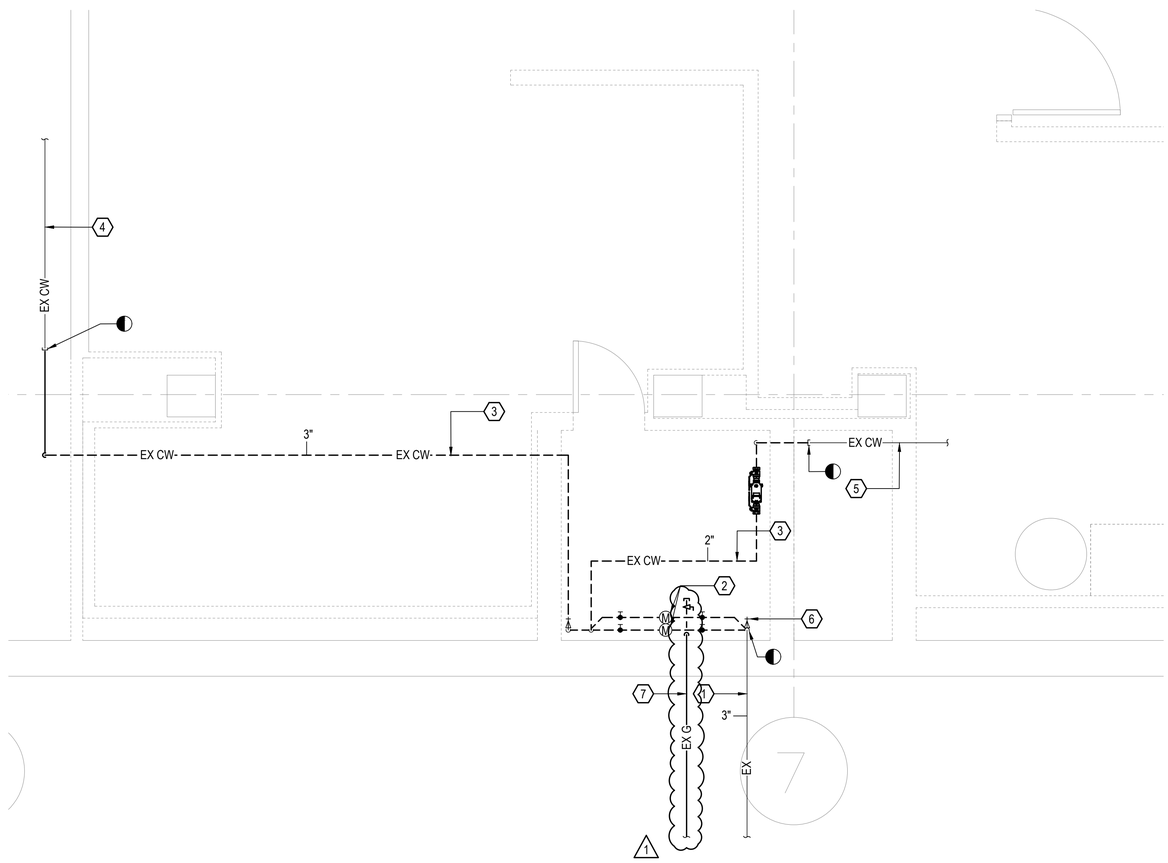

1 P2.1 ENLARGED BASEMENT DEMOLITION PLUMBING PLAN - WATER SERVICE CLOSET

1/2" = 1'-0"

0 1' 2' 3' 4' 5' 10'

SCALE: 1/2" = 1'-0"

1

PLUMBING DEMOLITION KEY NOTES: 1

1. EXISTING 3" WATER SERVICE FROM STREET MAIN TO REMAIN.
2. EXISTING WATER METERS TO BE RELOCATED.
3. EXISTING CW PIPING TO BE DEMOLISHED.
4. EXISTING 3" CW FEED TO BUILDING/ PUMP SUCTION TO REMAIN.
5. EXISTING 2" CW FEED TO RETAIL TENANTS TO REMAIN.
6. EXISTING BUILDING WATER SERVICE VALVE TO BE RELOCATED.
7. EXISTING GAS SERVICE TO HAS BEEN IDENTIFIED BY GAS UTILITY COMPANY TO BE NO LONGER IN USE AND DOES NOT FEATURE ANY CONNECTION TO THE PRESSURIZED NATURAL GAS SYSTEM IN THE BUILDING OR AT THE STREET. THE NATURAL GAS LINE SHALL BE ABANDONED IN PLACE AND SHALL BE CONTAINED WITHIN VAULT INFILL.

1

PLUMBING DEMOLITION GENERAL NOTES:

1. EXISTING CONDITIONS SHOWN ON THIS DRAWING HAVE BEEN OBTAINED FROM EXISTING DRAWINGS, FIELD OBSERVATIONS AND PHOTOS, AND MAY NOT INDICATE ALL ACTUAL EXISTING CONDITIONS. THE CONTRACTOR IS RESPONSIBLE FOR DETERMINING THE ACTUAL EXISTING CONDITIONS PRIOR TO FABRICATION OR PERFORMANCE OF ANY WORK. SHOULD CONDITIONS BE DISCOVERED THAT PREVENT EXECUTION OF THE WORK AS INDICATED, THE CONTRACTOR SHALL IMMEDIATELY NOTIFY THE ENGINEER AND ARCHITECT IN WRITING AND AWAIT DIRECTION BEFORE PROCEEDING WITH THE WORK.
2. PATCH ALL WALL, FLOOR, AND CEILING SURFACES SCHEDULED TO REMAIN, WHERE MEP ELEMENTS ARE BEING REMOVED, TO MATCH EXISTING CONDITIONS. REFER TO ARCHITECTURAL DRAWINGS FOR ADDITIONAL INFORMATION.
3. PRIOR TO DISCONNECTION OF ANY PIPING SYSTEM, CONTRACTOR SHALL VERIFY SERVICES TO OTHER AREAS OF THE BUILDING NOT IN CONTRACT WILL NOT BE AFFECTED. PROVIDE TEMPORARY CONNECTIONS AS REQUIRED FOR CONTINUITY OF SERVICE.

VILLAGE OF OAK PARK
CONSTRUCTION DOCUMENT(S)
REVIEWED FOR COMPLIANCE
KEEP A PRINTED APPROVED COPY OF THE PLANS
ON SITE AT ALL TIMES FOR CONTRACTORS AND INSPECTORS

625 W Adams Street – 19th Floor
Chicago, IL 60661
312.320.3668

LICENSED PROFESSIONAL ENGINEER
ALEXANDER G. RADKOFF
062-073334
OF ILLINOIS
AGR - 08.22.2025

DESIGN FIRM LIC. NO: 184008703-002
DESIGN FIRM LIC. NO. EXP.: 04.30.2027
ILLINOIS LICENCE NUMBER: 062.073334
LIC. EXP.: 11.30. 2025

--
SIDEWALK VAULT ALTERATIONS

1144 W LAKE ST
OAK PARK, IL 60301

NO.	DESCRIPTION	DATE
1	PERMIT REVISION 1	08/22/2025
1	ISSUED FOR PERMIT	07/28/2025

JOB NO.: 25.068

SCALE:

TITLE: ENLARGED BASEMENT PLUMBING DEMOLITION PLAN

SHEET: P2.1

7/24/2025 1:06:19 PM

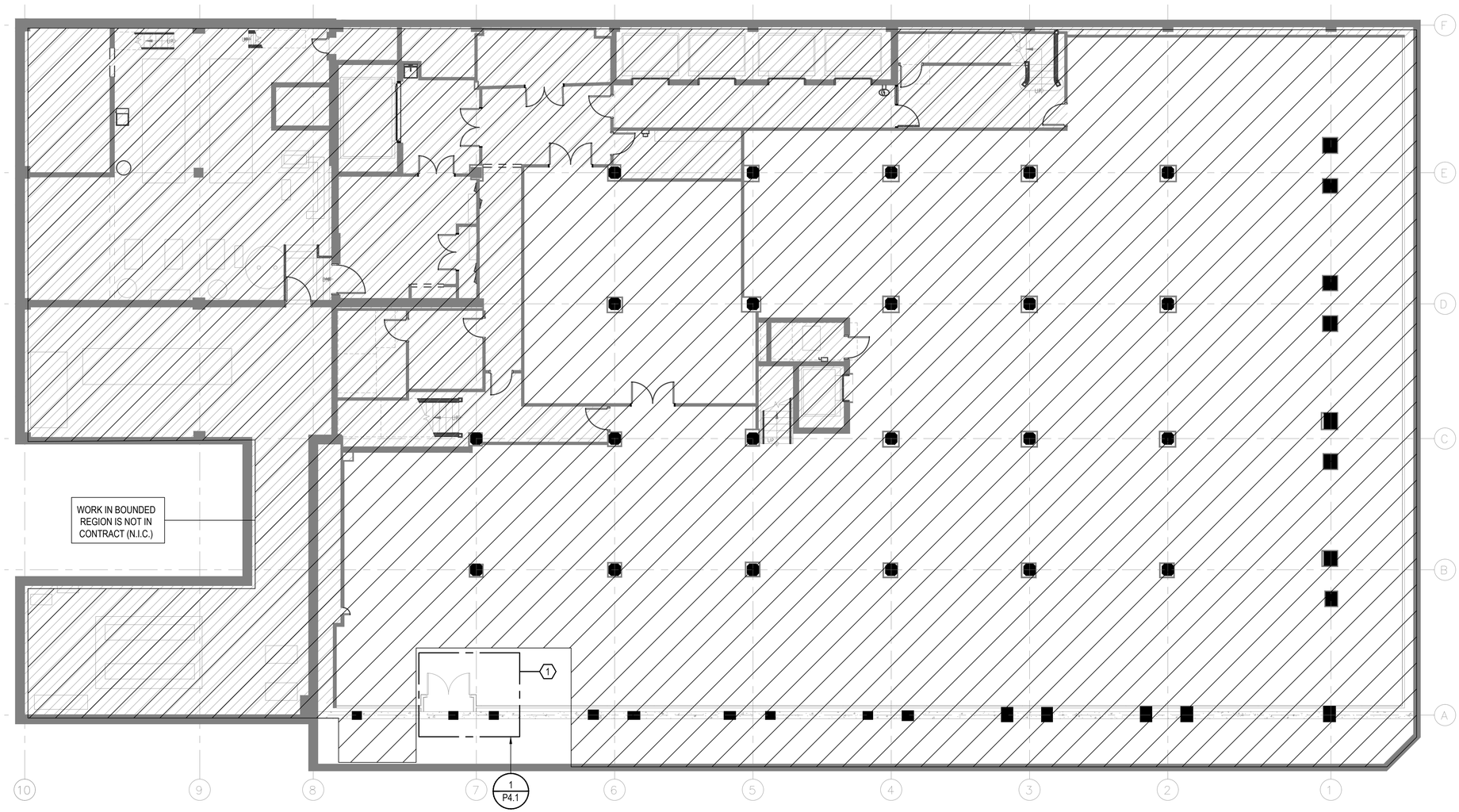

1 P3.1 BASEMENT OVERALL PLUMBING NEW WORK PLAN
1/8" = 1'-0"

0 1' 2' 3' 4' 5' 10'
SCALE: 1/8" = 1'-0"

1

7/24/2025 1:06:19 PM

VILLAGE OF OAK PARK
CONSTRUCTION DOCUMENT(S)
REVIEWED FOR COMPLIANCE
KEEP A PRINTED APPROVED COPY OF THE PLANS ON SITE AT ALL TIMES FOR CONTRACTORS AND INSPECTORS

625 W Adams Street – 19th Floor
Chicago, IL 60661
312.320.3668

LICENSED PROFESSIONAL ENGINEER
ALEXANDER G. RADKOFF
062-073334
OF ILLINOIS
AGR - 08.22.2025

DESIGN FIRM LIC. NO: 184008703-002
DESIGN FIRM LIC. NO. EXP.: 04.30.2027
ILLINOIS LICENCE NUMBER: 062.073334
LIC. EXP.: 11.30. 2025

--
SIDEWALK VAULT ALTERATIONS

1144 W LAKE ST
OAK PARK, IL 60301

NO.	DESCRIPTION	DATE
1	PERMIT REVISION 1	08/22/2025
1	ISSUED FOR PERMIT	07/28/2025

JOB NO.: 25.068

SCALE:

TITLE: OVERALL BASEMENT PLUMBING PLAN

SHEET: P3.1

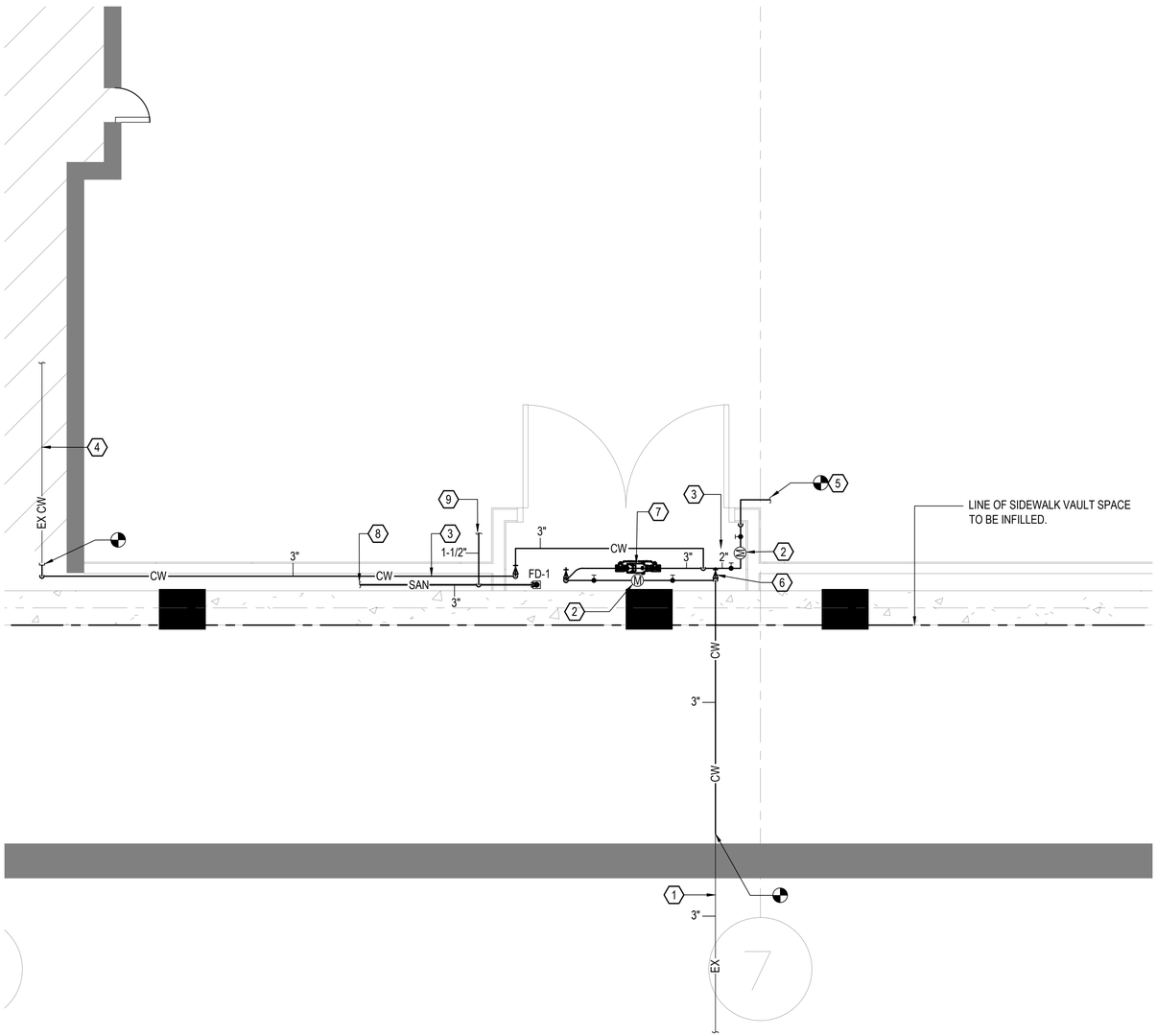

1 P4.1 ENLARGED BASEMENT PLUMBING PLAN - WATER SERVICE CLOSET
1/2" = 1'-0"

SCALE: 0 1' 2' 3' 4' 5' 10' 1/2" = 1'-0"

PLUMBING KEY NOTES: (1)

1. EXISTING 3" WATER SERVICE FROM STREET MAIN TO REMAIN.
2. PC TO INSTALL WATER METERS IN ACCORDANCE WITH VILLAGE AND WATER AUTHORITY REQUIREMENTS. PROVIDE SHUT OFF VALVES UPSTREAM AND DOWNSTREAM OF METERS.
3. NEW 3" CW FEED TO BUILDING AND PUMP SUCTION. PROVIDE NEW CONECTION TO EXISTING PIPING. VERIFY CONNECTION POINT IN FIELD.
4. EXISTING 3" CW FEED TO BUILDING/ PUMP SUCTION TO REMAIN.
5. NEW 2" CW FEED TO EXISTING RETAIL TENANT. PROVIDE NEW CONECTION TO EXISTING PIPING. VERIFY CONNECTION POINT IN FIELD.
6. RELOCATED BUILDING WATER SERVICE VALVE ON VERTICAL.
7. NEW REDUCED PRESSURE BACKFLOW PREVENTOR. SEE SCHEDULE.
8. NEW 3" SANITARY FROM FUNNEL DRAIN. PROVIDE NEW CONECTION TO EXISTING PIPING. VERIFY CONNECTION POINT IN FIELD.
9. NEW 1-1/2" VENT LINE. PROVIDE NEW CONECTION TO EXISTING PIPING. VERIFY CONNECTION POINT IN FIELD.

PLUMBING DRAINAGE GENERAL NOTES:

1. COORDINATE FIXTURES, PIPING, AND EQUIPMENT WITH ARCHITECTURAL PLANS.
2. FLOOR DRAINS SHALL BE INDIVIDUALLY VENTED.
3. PROVIDE 2 X DIA OF PIPE AIR GAP FOR ALL INDIRECT WASTE TERMINATING AT DRAIN RECEPTOR.
4. COORDINATE WORK WITH ALL OTHER TRADES.
5. DRAINAGE AND VENT SYSTEMS SHALL BE PRESSURE TESTED WITH WATER OR AIR IN ACCORDANCE WITH STATE PLUMBING CODE SECTION 890.1930.
6. NO HORIZONTAL DRY VENTS NOT MORE THAN 45° FROM THE VERTICAL ARE PERMITTED WITH THE EXEMPTION OF VENTS SERVING FLOOR DRAINS.

PLUMBING SUPPLY GENERAL NOTES:

1. DOMESTIC WATER PIPING SHALL BE INSULATED. REFER TO SCHEDULE SHEET.
2. PROVIDE ACCESS DOORS AS REQUIRED FOR ACCESS TO VALVING AND EQUIPMENT.
1. PROVIDE MINIMUM 30" CLEARANCE IN-FRONT OF BACKFLOW DEVICE AND 8" IN BACK CLEAR OF ANY PIPING OR OTHER OBSTRUCTION.

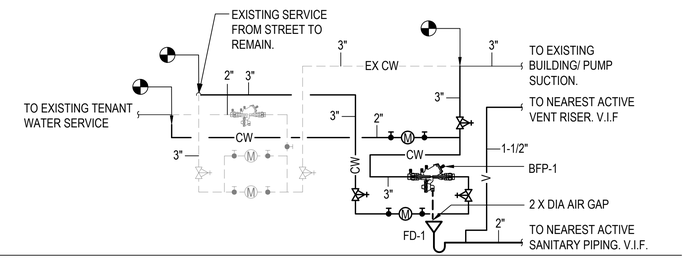

2 P4.1 PLUMBING RISER DIAGRAM
1/2" = 1'-0"

VILLAGE OF OAK PARK
CONSTRUCTION DOCUMENT(S)
REVIEWED FOR COMPLIANCE
KEEP A PRINTED APPROVED COPY OF THE PLANS ON SITE AT ALL TIMES FOR CONTRACTORS AND INSPECTORS

625 W Adams Street – 19th Floor
Chicago, IL 60661
312.320.3668

LICENSED PROFESSIONAL ENGINEER
ALEXANDER G. RADKOFF
062-073334
OF ILLINOIS
AGR - 08.22.2025

DESIGN FIRM LIC. NO: 184008703-002
DESIGN FIRM LIC. NO. EXP.: 04.30.2027
ILLINOIS LICENCE NUMBER: 062.073334
LIC. EXP.: 11.30. 2025

--
SIDEWALK VAULT ALTERATIONS

1144 W LAKE ST
OAK PARK, IL 60301

NO.	DESCRIPTION	DATE
2	PERMIT REVISION 1	08/22/2025
1	ISSUED FOR PERMIT	07/28/2025

JOB NO.: 25.068

SCALE:

TITLE: ENLARGED BASEMENT PLUMBING PLAN

SHEET: P4.1

7/24/2025 1:06:19 PM

System No. C-AJ-5091

F RATING - 2 HR
T RATING - 1 HR
L RATING AT AMBIENT - 4 CFM/SQ FT
L RATING AT 400 F - LESS THAN 1 CFM/SQ FT

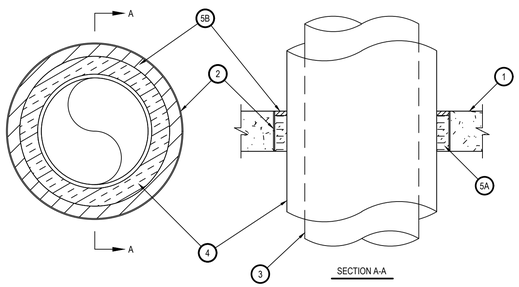

3 / P5.1 PIPE PENETRATION DETAIL - CONCRETE
NOT TO SCALE

1. FLOOR OR WALL ASSEMBLY — MIN 4-1/2 IN. THICK REINFORCED LIGHTWEIGHT OR NORMAL WEIGHT (100-150 PCF) CONCRETE. WALL MAY ALSO BE CONSTRUCTED OF ANY UL CLASSIFIED CONCRETE BLOCKS*. MAX DIAM OF OPENING IS 19-1/2 IN.
2. METALLIC SLEEVE — NOM 20 IN. DIAM (OR SMALLER) SCHEDULE 10 (OR HEAVIER) STEEL PIPE.
3. THROUGH PENETRANTS — ONE METALLIC PIPE OR TUBING TO BE INSTALLED EITHER CONCENTRICALLY OR ECCENTRICALLY WITHIN THE FIRESTOP SYSTEM. PIPE OR TUBING TO BE RIGIDLY SUPPORTED ON BOTH SIDES OF FLOOR OR WALL ASSEMBLY. THE FOLLOWING TYPES AND SIZES OF METALLIC PIPES OR TUBING MAY BE USED:
   A. STEEL PIPE — NOM 12 IN. DIAM (OR SMALLER) SCHEDULE 10 (OR HEAVIER) STEEL PIPE.
   B. IRON PIPE — NOM 12 IN. DIAM (OR SMALLER) CAST OR DUCTILE IRON PIPE.
   C. COPPER PIPE — NOM 6 IN. DIAM (OR SMALLER) REGULAR (OR HEAVIER) COPPER PIPE.
   D. COPPER TUBING — NOM 6 IN. DIAM (OR SMALLER) TYPE L (OR HEAVIER) COPPER TUBING.
4. PIPE COVERING — NOM 2 IN. THICK HOLLOW CYLINDRICAL HEAVY DENSITY (MIN 3.5 PCF) GLASS FIBER UNITS JACKETED ON THE OUTSIDE WITH AN ALL-SERVICE JACKET. LONGITUDINAL JOINTS SEALED WITH METAL FASTENERS OR FACTORY-APPLIED, SELF-SEALING LAP TAPE. TRANSVERSE JOINTS SECURED WITH METAL FASTENERS OR WITH BUTT TAPE SUPPLIED WITH THE PRODUCT. THE ANNULAR SPACE BETWEEN THE INSULATED PIPE AND THE EDGE OF THE PERIPHERY OF THE OPENING SHALL BE MIN 1/2 IN. TO A MAX 2-1/4 IN.
4A. PIPE COVERING — (NOT SHOWN) — AS AN ALTERNATE TO ITEM 4. MAX 2 IN. THICK CYLINDRICAL CALCIUM SILICATE (MIN 14 PCF) UNITS SIZED TO THE OUTSIDE DIAM OF THE PIPE OR TUBE MAY BE USED. PIPE INSULATION SECURED WITH STAINLESS STEEL BANDS OR MIN 8 AWG STAINLESS STEEL WIRE SPACED MAX 12 IN. OC. THE ANNULAR SPACE SHALL BE MIN 1/2 IN. TO MAX 2-1/4 IN.
5. FIRESTOP SYSTEM — THE FIRESTOP SYSTEM SHALL CONSIST OF THE FOLLOWING:
   A. PACKING MATERIAL — MIN 4 IN. THICKNESS OF MIN 4 PCF MINERAL WOOL BATT INSULATION FIRMLY PACKED INTO OPENING AS A PERMANENT FORM. PACKING MATERIAL TO BE RECESSED FROM TOP SURFACE OF FLOOR OR FROM BOTH SURFACES OF WALL AS REQUIRED TO ACCOMMODATE THE REQUIRED THICKNESS OF FILL MATERIAL.
   B. FILL, VOID OR CAVITY MATERIAL* — SEALANT — MIN 1/2 IN. THICKNESS OF FILL MATERIAL APPLIED WITHIN THE ANNULUS, FLUSH WITH TOP SURFACE OF FLOOR OR WITH BOTH SURFACES OF WALL.
   HILTI CONSTRUCTION CHEMICALS, DIV OF HILTI INC — FS-ONE SEALANT
*BEARING THE UL CLASSIFICATION MARK

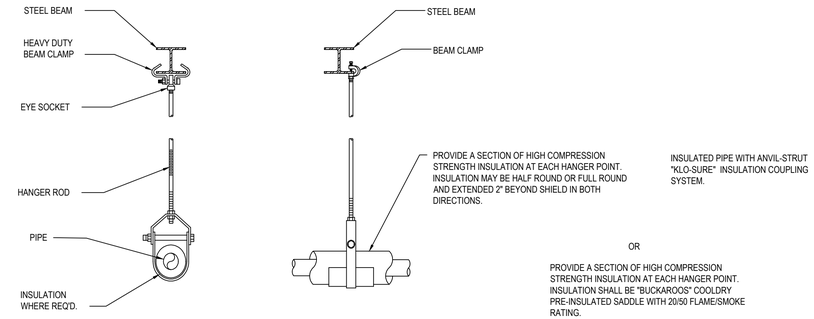

1 / P5.1 CLEVIS PIPE HANGER - STEEL CONSTRUCTION
NOT TO SCALE

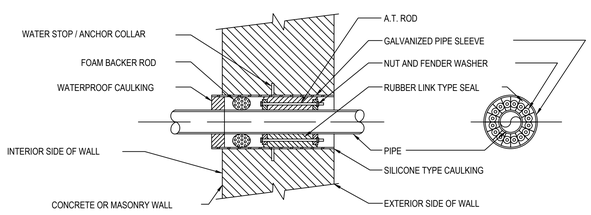

4 / P5.1 UNDERGROUND PIPE SLEEVE DETAIL
NOT TO SCALE

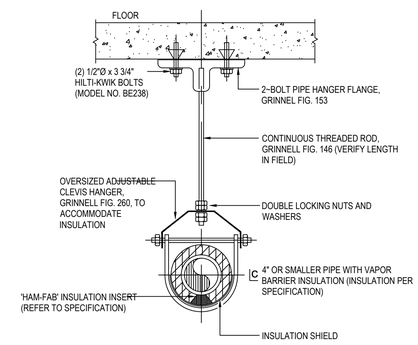

2 / P5.1 PIPE HANGER DETAIL
NO SCALE

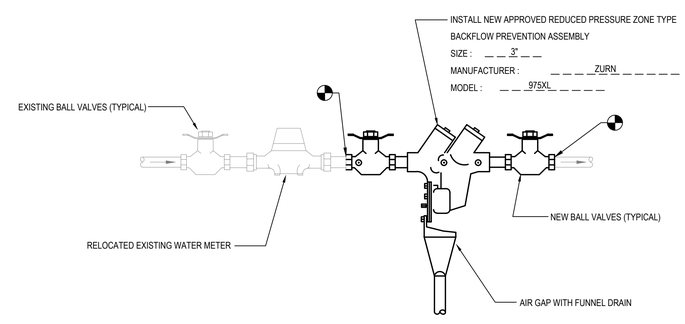

5 / P5.1 EXISTING WATER SERVICE PIPING DETAIL
NOT TO SCALE

VILLAGE OF OAK PARK
CONSTRUCTION DOCUMENT(S)
REVIEWED FOR COMPLIANCE
KEEP A PRINTED APPROVED COPY OF THE PLANS ON SITE AT ALL TIMES FOR CONTRACTORS AND INSPECTORS

625 W Adams Street – 19th Floor
Chicago, IL 60661
312.320.3668

LICENSED PROFESSIONAL ENGINEER
ALEXANDER G. RADKOFF
062-073334
OF ILLINOIS
AGR - 08.22.2025

DESIGN FIRM LIC. NO: 184008703-002
DESIGN FIRM LIC. NO. EXP.: 04.30.2027
ILLINOIS LICENCE NUMBER: 062.073334
LIC. EXP.: 11.30. 2025

--
SIDEWALK VAULT ALTERATIONS

1144 W LAKE ST
OAK PARK, IL 60301

NO.	DESCRIPTION	DATE
1	PERMIT REVISION 1	08/22/2025
	ISSUED FOR PERMIT	07/28/2025

JOB NO.: 25.068

SCALE:

TITLE: PLUMBING DETAILS

SHEET: P5.1

7/24/2025 1:06:19 PM

PIPE INSULATION SCHEDULE

SYSTEM OR SERVICE	FLUID TEMPERATURE RANGE (DEG F)	INSULATION TYPE	PIPE MATERIAL	INSULATION THICKNESS			
				PIPE SIZE			
				1/2" TO 1"	1-1/2" TO 2"	2-1/2" TO 4"	5" TO 6"
DOMESTIC HOT WATER	40 TO 140	MINERAL FIBER	COPPER	1'	1"	1"	1"
				---	---	---	---
DOMESTIC COLD WATER	35 TO 60	MINERAL FIBER	COPPER	1/2"	1/2"	1"	1"
				---	---	---	---

BACKFLOW PREVENTER SCHEDULE

MARK	DESCRIPTION	MANUFACTURER & MODEL NUMBER	LOCATION	NOTES
BFP-1	REDUCED PRESSURE BACKFLOW PREVENTER ASSE-1047	ZURN 975-XL	AT DOMESTIC WATER SERVICE ENTRANCE (3" AND LARGER)	1

NOTES -
1. PROVIDE AIR GAP FITTING. ROUTE DRAIN TO AN APPROVED WASTE RECEPTOR.

ROOF DRAIN AND FLOOR DRAIN SCHEDULE

FD-1	FUNNEL DRAIN	MI FAB MI-950-F	3" OUTLET W/ 4" DIA FUNNEL

VILLAGE OF OAK PARK
CONSTRUCTION DOCUMENT(S)
REVIEWED FOR COMPLIANCE
KEEP A PRINTED APPROVED COPY OF THE PLANS ON SITE AT ALL TIMES FOR CONTRACTORS AND INSPECTORS

625 W Adams Street – 19th Floor
Chicago, IL 60661
312.320.3668

LICENSED PROFESSIONAL ENGINEER
ALEXANDER G. RADKOFF
062-073334
OF ILLINOIS
AGR - 08.22.2025

DESIGN FIRM LIC. NO: 184008703-002
DESIGN FIRM LIC. NO. EXP.: 04.30.2027
ILLINOIS LICENCE NUMBER: 062.073334
LIC. EXP.: 11.30. 2025

--
SIDEWALK VAULT ALTERATIONS

1144 W LAKE ST
OAK PARK, IL 60301

NO.	DESCRIPTION	DATE
2	PERMIT REVISION 1	08/22/2025
1	ISSUED FOR PERMIT	07/28/2025

JOB NO.: 25.068

SCALE:

TITLE: PLUMBING SCHEDULES

SHEET: P6.1

7/24/2025 1:06:19 PM