REQUEST FOR PROPOSALS (RFP)

#18-11: 700 Madison St Building Demolition

Issued August 30, 2018

Due September 13, 12:00 PM

Pre-Proposal Walk-Through Meeting onsite, park in
700 Madison St parking lot:
September 6th, 2018, 10:00 AM-11:30 AM

The Village of Oak Park ("the Village") is requesting qualifications to identify contractors to assure that it is receiving the optimum level of services at a competitive price.

Responses shall be received on or before September 13th, 2018 by 12:00 PM to:

Village of Oak Park
Engineering Division of the Public Works Department
Attn: RFP Solicitation Number 18-11:
Building Demolition 700 Madison St.
201 South Blvd
Oak Park, IL 60302

This page is intentionally blank

Section I. General Requirements

A. Introduction and Mandatory Terms

The Village requests the services of a qualified Contractor for the purpose of Building Demolition and all related work at 700 Madison St. Please fill out the appropriate form(s) for all sections being submitted for consideration.

The Village will receive responses Monday through Friday, 8:30 A.M. to 4:00 P.M. at the Office of the Village Engineer, Village of Oak Park, 201 South Blvd, Oak Park, Illinois, 60302. Each Contractor shall submit their proposal on the forms furnished *in a sealed envelope titled " RFP#18-11:* Building Demolition 700 Madison St*."*

All additional questions must be submitted via email to alazaridis@oak-park.us no later than September 7th, 2018 at 10AM. Responses will be provided to the known list of RFP recipients.

There will **not** be a public bid opening as this contract is a RFP. Responses will be reviewed and evaluated, and all information regarding status will be kept confidential until a decision is made and a recommendation provided to the Village Board for approval.

Proposals will not be accepted by the Village of Oak Park from Contractors who have failed to provide payment, if required, for obtaining proposal forms and have also failed to register with the Engineering Division of the Public Works Department as plan holders for this project.

All inquiries regarding this RFP shall be directed to: Arry Lazaridis, Engineering Technician, at alazaridis@oak-park.us.

The work to be performed pursuant to this proposal is subject to the Illinois Prevailing Wage Act, 820 ILCS 130/0.01 et seq.

Alterations, Omissions, extra work: The Village reserves the right to increase or decrease the quantity of any item or portion of the work, or to omit portions of the work, as may be demand necessary.

B. Presentation of Request for Qualifications

The Village reserves the right to select a short list of Contractors at its own discretion to present their qualifications, respond to questions, and supply supplemental information.

C. Contractor Notification

Contractors will be notified in writing of further questions and/or decisions.

D. Award of Agreement

An agreement or equivalent agreement may be executed once one or more respondents are found to be qualified, a selection of the most qualified is determined by the evaluation committee, and the Village Board approves of the award.

Any agreement with a selected Contractor or Contractors must be reviewed and approved by the Village Attorney, may be approved and authorized by the Village of Oak Park Board of Trustees, and executed by the Village Manager. The Contractors are advised that Village staff, other than the Village Manager, have no authority to sign agreements or modify existing agreements on behalf of the Village and that any such agreements are null and void.

E. Taxes Not Applicable

The Village as a municipality pays neither federal excise tax nor Illinois retailer's occupational tax.

F. Interpretation of the Request for Proposal Document

Any Contractor in doubt as to the true meaning of any part of this document may request an interpretation thereof from the Village or its representative. The person requesting the interpretation shall be responsible for its prompt delivery. At the request of the Contractor or in the event that Village management deems the interpretation to be substantive, the interpretation will be made by written addendum duly issued by the Village.

In the event that a written addendum is issued, either as a result of a request for interpretation or the result of a change in the requested RFP specifications initiated by the Village, a copy of such addendum will be provided to the known list of RFP recipients. The Village will not assume responsibility for receipt of such addendum. In all cases it will be the Contractors' responsibility to obtain all addenda issued.

G. Competency of Contractor

No submission will be accepted from, or agreement awarded to, any person, firm or corporation that is in arrears or is in default upon any debt or agreement. The Contractor, if requested, must present evidence of ability and possession of necessary facilities, and financial resources to comply with the terms of the scope of services.

H. Subletting of Contract

In order that the Village may be assured that only qualified and competent sub-contractors and/or sub-consultants will be employed on the proposed project, each

Contractor shall submit with their proposal a list of sub-contractors and/or sub-consultants who would be called upon to perform the work. The Contractor shall have determined to their own satisfaction that a listed subcontractor and/or sub-consultant has been successfully engaged in this particular type of work for a reasonable length of time and is qualified both technically and financially to perform that pertinent phase of the work for which they are listed.

No contract awarded by the Village of Oak Park shall be assigned or any part subcontracted without the written consent of the Village of Oak Park. In no case shall such consent relieve the bidder selected from their obligations or change the terms of the contract.

I. Compliance with Applicable Laws

The Contractor will strictly comply with all Ordinances and codes of the Village of Oak Park and applicable federal and state law.

J. Term of Agreement

The agreement shall be on the earlier of October 2, 2018, or the last date signed by both parties, whichever is later, and shall continue until the completion of all work associated with the Building Demolition 700 Madison St

K. Payments

The Village shall pay the Contractor on a monthly basis based on the services provided during the month. Payment to the Contractor shall be made within 30 days of the receipt of an invoice for services as outlined in the proposal. Invoices shall be mailed to the Village Engineer located at the Village of Oak Park, 201 South Boulevard, Oak Park, Illinois 60302. All invoices will be paid within 30 days of approval. Charges for late payments must be in accordance with the Local Government Prompt Payment Act, 50 ILCS 505/1, requiring a maximum interest penalty of 1% per month or portion thereof.

L. Termination of Contract

The Village further reserves the right to terminate the whole or any part of this agreement, upon written notice to the Contractor, in the event of default by the Contractor. Default is defined as failure of the Contractor to perform any of the agreement or failure to make sufficient progress so as to endanger performance of this agreement in accordance with its terms. In the event of default and termination, the Village will procure upon such terms and in such manner as may be deemed appropriate services similar to those so terminated. The Contractor shall be liable for excess costs for such similar services unless acceptable evidence is submitted that failure to perform the agreement was due to causes beyond the control and without the fault of negligence of the Contractor.

M. Contractor Personnel Assigned to the Village of Oak Park Account(s)

The Village reserves the right to accept or reject any staff designated by the Contractor to perform the demolition activities. If no suitable replacement staff is provided, the Village reserves the right to terminate the agreement.

N. Confidentiality

The Contractor shall keep the Village's employee and all related data confidential.

O. Insurance Requirements

The selected Contractor must purchase and maintain for the length of the agreement, the lines of insurance described in this section. All insurance coverage shall be on an occurrence basis. The Contractor shall provide evidence of such insurance to the Village together with its proposal, and will provide evidence that the Village has been added as a named insured, where applicable, before commencement of the services and on an annual basis thereafter. Certificates of Insurance shall contain a clause stating that the coverage afforded by the policies listed will not be canceled or materially altered, except after forty-five (45) days advance written notice to the Village. The Contractor shall secure the following endorsements to each of the required policies: "It is understood and agreed that the insurance company will give not less than forty-five (45) days advance written notice of any cancellation or material change under any of these policies to the Village of Oak Park. *"In the event that such notice is not given to the Village of Oak Park at least forty-five (45) days prior to cancellation or material change, the policy will continue in full force and effect for the benefit of the Village as if such change or cancellation had not occurred."* The limits of liability for the insurance required shall provide coverage for not less than the following amounts, or greater where required by law:

(a) **Commercial General Liability:**

i. Coverage to include, Broad Form Property Damage, contractual and Personal Injury.

ii. Limits:

General Aggregate	$ 2,000,000.00
Each Occurrence	$ 1,000,000.00
Personal Injury	$ 1,000,000.00

iii. Coverage for all claims arising out of the Proposer's operations or premises, anyone directly or indirectly employed by the Proposer.

(b) **Professional Liability:**

i. Per Claim/Aggregate $2,000,000.00

ii. Coverage for all claims arising out of the Contractor's operations or premises, anyone directly or indirectly employed by the

Contractor, and the Contractor's obligations under the indemnification provisions of this Agreement to the extent same are covered.

(c) **Workers' Compensation:**

i. Workers' compensation insurance shall be in accordance with the provisions of the laws of the State of Illinois, including occupational disease provisions, for all employees who perform work pursuant to the agreement, and in case work is subcontracted, the Contractor shall require each subcontractor similarly to provide Workers' Compensation Insurance. In case employees engaged in hazardous work under this Agreement are not protected under said worker's compensation insurance, the Proposer shall provide, and shall cause each subcontractor to provide, adequate and suitable insurance for the protection of employees not otherwise provided.

(d) **Comprehensive Automobile Liability:**

i. Coverage to include all owned, hired, non-owned vehicles, and/or trailers and other equipment required to be licensed, covering personal injury, bodily injury and property damage.

ii. Limits:

Combined Single Limit	$1,000,000.00

(e) **Umbrella:**

i. Limits:

Each Occurrence/Aggregate	$5,000,000.00

(f) The Village, its officers, officials, employees and agents shall be named as additional insureds on all insurance policies set forth herein except Workers' Compensation and Professional Liability. The Contractor shall be responsible for the payment of any deductibles for said insurance policies. The coverage shall contain no special limitations on the scope of protection afforded to the Village, its officers, officials, employees and agents.

The Contractor understands and agrees that any insurance protection required by the agreement or otherwise provided by the Contractor shall in no way limit the responsibility to indemnify, keep and save harmless, and defend the Village, its officers, officials, employees and agents as herein provided.

A Builder's Risk "all-risk" policy form shall also be provided including insurance for physical loss or damage to the Work, temporary buildings, false-work, and materials and equipment in transit, and shall insure against at least the following perils or causes of loss: fire, lightning, extended coverage, theft, vandalism and malicious mischief, earthquake, collapse, debris removal, demolition occasioned by enforcement of Laws and Regulations, water damage (other than that caused by flood), and such other perils or causes of loss.
Limit: $1,000,000.00 .

P. Hold Harmless and Indemnity

Notwithstanding any limitations or restrictions applicable to any insurance or bonds required hereunder, the Contractor shall defend, indemnify and hold the Village of Oak Park and its officers, officials, employees, and agents harmless from and against any and all liability, loss, damage, claim, payment or expense, including attorney fees, which the Village or its officers, officials, employees, and agents may incur resulting from or arising out of any error or omission in the performance of the agreement by the Contractor, including, without limitation, errors or omissions in the handling, accounting for, or transferring of funds, or to work, services or systems or products provided in the performance of the agreement by the Contractor or its employees, agents, servants, associates, Contractors, subcontractors, or assignees.

Q. Tentative Schedule

Below is a tentative schedule for the request for proposal, evaluation of responses, selection and approval of a preferred Contractor(s):

Proposals due to Engineering Division by noon	September 13, 2018
Proposals reviewed	September 13-14, 2018
Recommend Agreement Approval	September 14, 2018
Agreement presented to Village Board for approval	October 1, 2018
Anticipated Contract Execution	October 2-3, 2018

This project shall be completed in 40 working days, according to IDOT 108.04. The charging of work days will start when the Contractor begins actual construction work, and in no case later than 10 days after the execution and approval of the contract.

R. Property Damage

The Contractor shall take great care to avoid damage to the Oak Park right-of-way and all adjacent buildings. All damage will be the responsibility of the Contractor to repair to its original condition at the cost of the Contractor and to the satisfaction of the Village.

S. Reference Materials

Included with this RFP, the Contractors will be provided with the following information:

1. ALTA Survey: 700 Madison St.
2. Phase I Environmental executive summary is attached to the end of this RFP. Full environmental reports can be accessed from the following drop-box location (Underground storage was not known at time of report): https://www.dropbox.com/sh/ltvs75asfls4dc3/AAAwR8W13_gqduhfJooc29-ta?dl=0

3. Asbestos- Containing Material Summary report ACM Appendices (will be provided with addendum)
4. IDOT Standard 701606-10 Urban Single Lane Closure
5. IDOT Standard 701801-06 Sidewalk, corner or crosswalk closure
6. Utility Disconnections Plan
7. Site-Work Plan
8. Title commitments for the properties can be assessed from the drop-box location referenced in item 2.
9. Oak Park Demolition Guidelines

All reports are included for the bidder's information and are not a warranty of existing conditions. Interpretation of the data is the responsibility of the bidding contractor.

T. Completion of Work

1. The contractor agrees to complete all work as shown in the Tentative Schedule section and as outlined in the Scope of Services unless additional time is granted in accordance with the specifications. Should the Contractor fail to complete and deliver the work within the given working days, the Contractor shall be liable to pay the Village of Oak Park liquidated damages according to Section 108.09 of the Illinois Department of Transportation Standard Specifications for Road and Bridge Construction Adopted April 1, 2016. Extensions of contract time shall be according to Section 108.08 of the Illinois Department of Transportation Standard Specifications for Road and Bridge Construction Adopted April 1, 2016.

2. If this proposal is accepted and the undersigned fails to execute an agreement and contract bond within ten (10) days after the Notice of Award, it is hereby agreed that the Bid Bond or check shall be forfeited to the awarding authority.

U. Safety

The Contractor shall be responsible for compliance with all OSHA, IDOL, State, and Federal standards and codes in performance of work under this contract.

The Contractor is also responsible to comply with the latest edition of the ANSI A10.6 Standard for Safety Requirements for Demolition Operations; the latest edition of NFPA 241 Standard for Safeguarding Construction, Alteration, and Demolition Operations.

V. Builder's Risk

A Builder's Risk "all-risk" policy form shall also be provided including insurance for physical loss or damage to the Work, temporary buildings, false-work, and materials and equipment in transit, and shall insure against at least the following perils or causes of loss: fire, lightning, extended coverage, theft, vandalism and malicious

mischief, earthquake, collapse, debris removal, demolition occasioned by enforcement of Laws and Regulations, water damage (other than that caused by flood), and such other perils or causes of loss.

W. Proposal Outline Requirements

Proposals shall include the following information:

1) Contractor shall submit a brief staging and traffic narrative: describing the sequence and approach for equipment staging and mobilization, traffic control, and overall approach for performing the demolition activities.

2) Respondents shall furnish a minimum of four (4) references from previous demolition projects similar in size and scope to this project. Please provide contact name, address and telephone number. The following form shall be used

RESPONDENT REFERENCES

Respondent Name:_____

Name	Address	Contact Person & Phone #
1.		
2.		
3.		
4.		

State the number of years in this business _____.

3) The attached cost proposal for the scope of work should be completed, using the Proposal Form provided in Section III.

4) Proposal Bid Bond and all other items in this packet stating 'to return with bid'

.

Section II. Scope of Services

DETAILED SPECIFICATIONS FOR
PROJECT 18-11
Building Demolition 700 Madison St.

This project consists of the demolition of one building. a brick automotive repair building at 700 Madison St., including asbestos abatement-removal, utility disconnections, foundation removal, placement of aggregate and site grading of the building-footprints, site-work per the site-work plan exhibit, fence installation as well as all other activities outlined below. The existing parking-lot at 700 Madison St is to remain, but can be used for staging.

700 Madison St.

*Approximate building area to be removed= 6,000 sft

Basement: none known but contractor to verify

Underground Tank: Location identified but size to be verified

- Parking lot to remain

Property area from plat of survey=12,381.18 sf

*Building Area approximated from ALTA Survey (dated 04/06/2015); Contractor shall Verify the complete building-area.

1. The removal and disposal of the building, and of all appurtenances relating to electrical, plumbing including any plumbing underneath the building, fixtures, heating, cooling, boilers, water-heaters, security-systems, cameras, and all other remaining related building appurtenances remaining in the building shall be removed. All oil, and fluid disposals associated with the removal of any mechanical equipment shall be included in the cost of this work; and shall be disposed of in accordance to all local, state, and federal requirements. All equipment, furniture, supplies, chemicals, miscellaneous supplies and materials remaining in the building at the time of Contract Execution, shall be the responsibility of the Contractor to remove and dispose of according to all Village Ordinances and laws of the State of Illinois. The cost of the aforementioned work shall be included in the cost of the BUILDING DEMOLITION.

2. The contractor shall comply with all Village Ordinances and laws of the State of Illinois, and all pertinent IDOT standards according to the latest edition of the 'Standard Specifications for Road and Bridge Construction'. Permits for the demolition work will need to be obtained by the Contractor at the Contractor's cost from Cook County as well as the Village of Oak Park. The Contractor shall not start demolition activities until all Cook County and Village of Oak Park demolition permits are approved. Permit fees will be waived for Village of Oak Park demolition permits

on this project. Deposits still required to the Village of Oak Park for utility pavement restoration and parkway restoration.

The Contractor shall also comply with all EPA regulations, NIOSH, NESHAPS and OSHA regulations on asbestos, Illinois Asbestos Abatement Act (105 ILCS 105), Illinois Commercial and Public Building Asbestos Abatement Act (225 ILCS 207), Illinois Asbestos Abatement for Public and Private Schools and Commercial and Public Buildings in Illinois (77 II Adm. Code 855), Cook County Environmental Control Ordinance (Article VI).

3. In order to decrease the amount of construction and demolition debris being sent to landfills, the Cook County Board passed the Demolition Debris Diversion Ordinance requiring all projects to divert 70% by weight of commercial and industrial projects and 70% by weight diversion requirement for residential properties, which includes a 5% reuse requirements; including any recent updates, contractor to confirm latest requirements.

4. The Contractor's attention is called to the fact that the preservation of existing trees and existing plants is of the utmost importance to the Village of Oak Park. At no time shall the Contractor prune or remove any trees unless specifically directed by the Village Project Engineer or the Village Forester. Any damage done to existing trees and existing plants by the Contractor shall be repaired by the Contractor at the Contractor's own cost. Any trees overhanging the building shall be the responsibility of the Contractor to prune, if it is deemed necessary to prune by the Village Forester in order to avoid damage during demolition, this cost should be included in the cost of the BUILDING DEMOLITION.

   When assessing damage to trees by the contractor, value of parkway trees will be calculated at the ISA evaluation based on the latest Village of Oak Park tree inventory.

5. The full perimeter of the site shall be protected with a temporary 8 feet-high construction fence during the demolition work activities, meeting the Village's Building and Property Standards Department requirements, included in the cost of the BUILDING DEMOLITION. Also, Traffic Control and Protection needed to perform the work will be included in the cost of the BUILDING DEMOLITION and shall be in accordance to IDOT highway-standards.

   The Contractor shall notify the Village at least 1 week in advance of the start of activities.

6. Madison St. And Euclid Ave. Shall be open to traffic at all times: the property shall be fenced off during the work. Please notify the engineering Department 3 Working days in advance for approval if a partial-closure is necessary. The parking-lot at 700 Madison St. can be used for staging but shall be protected during all demolition activities, and is not included for removal in the contract. At the completion of the project, the existing 700 Madison St parking-lot shall be in a condition suitable for

passenger vehicle traffic as evaluated by the Engineer: any depressions or potholes created by demolition shall be filled with HMA, N50. The cost the aforementioned work shall be included in the cost of the BUILDING DEMOLITION.

Parking shall be closed on Madison St. Euclid Ave directly along the frontage of the building, during all asbestos and demolition operations. Please notify the Parking Services Department 3 working day in advance for coordination. The Contractor shall hand "no parking" signs 24 hours in advance of any work. Signs shall be approved by the Engineer prior to being hung. The cost of the aforementioned work shall be included in the cost of the BUILDING DEMOLITION.

Madison St. from Harlem is the approved route for delivering heavy equipment and materials to and from the site. All equipment, materials, refuse, and machinery shall be stored within the property- limits. All equipment must be staged and operated within the property-limits. The costs associated with mobilization should be included in the cost of BUILDING DEMOLITION. No additional costs in mobilization will be allowed by the Contractor for any delays between the end of asbestos and the start of demolition, or for any delays caused by the contractor.

7. The contractor shall close all public sidewalks adjacent to the 700 Madison St buildings during all building demolition activities. A sidewalk diversion shall be implemented on Madison St. and a sidewalk closure shall be implemented on Euclid Ave according to IDOT Standard 701801-05, the detail is included as an attachment at the end of this RFP. The sidewalk diversion will be accomplished using concrete jersey walls for 150' pinned in to pavement as required by engineer.

   The protection of public sidewalk shall be the responsibility of the Contractor. Following construction the contractor shall perform the following site work and all other items as shown on the attached exhibit Any sidewalk damaged by contractor shall be, replaced at their cost and sidewalk shall be PCC 5 inch on 2 inch virgin CA-6. The granular material shall be compacted to not less than 95% standard Proctor density. This work shall be in accordance with the applicable Articles of Sections 424 and 440 of the IDOT Standard Specifications for Road and Bridge Construction, April 1, 2016.

   Any parkways damaged by contractor shall be reported and replaced at their cost. This work associated with topsoil and sod shall consist of preparing the ground surface, furnishing and applying topsoil to a 4" depth, fertilizing the areas to be sodded as specified in the plans and furnishing and placing the sod. All work shall be in accordance with the applicable Articles of Sections 251.03, 252, 1081.03 and 1081.08 of the IDOT Standard Specifications for Road and Bridge Construction, April 1, 2016. Sod shall be Kentucky blue grass.

   A. Excavated areas shall be backfilled up to 4" below the proposed grade with suitable materials from the job site or materials hauled in by the contractor. Such fill materials shall consist of clay, fine

granular materials or other materials approved by the Engineer, but in no case shall those materials contain broken concrete, rocks or stones larger than one (1) inch in gradation. The balance of fill up to proposed grade line shall consist of topsoil.

B. Areas damaged by any construction equipment or storage of materials shall be raked to remove any foreign materials and shall be cultivated to a depth of 3" by roto-tilling. Excessive vegetation shall be raked out and topsoil shall be placed over these areas as necessary to meet the proposed grade.

In all cases, whether shown on plan cross section or not, the proposed grade of the parkway shall be a true line from the sidewalk to the top of the adjacent street curb. If a change at the sidewalk or curb line occurs, the parkway shall be re-graded in accordance with procedures defined in B. above.

After topsoil has been placed and graded, it shall be rolled with hand rollers to a firm density and fertilizer shall be applied at a rate of 180 lbs. per acre by means of mechanical spreader.
180 pounds of fertilizer nutrients per acre shall be applied at a 1:1:1 ratio as follows:

Nitrogen Fertilizer Nutrients:	60 lbs./acre
Phosphorus Fertilizer Nutrients:	60 lbs./acre
Potassium Fertilizer Nutrients:	60 lbs./acre

The total cost of this aforementioned work shall be included in the cost of BUILDING DEMOLITION. All aggregate placement shall be tested for compaction by an IDOT approved material-testing company at the cost of the Contractor. All tickets for aggregate shall be collected by the Contractor and delivered to the Village. All other sidewalk damaged by the Contractor shall be replaced by the Contractor at the Contractor's own expense to the satisfaction of the Village.

8. The Contractor shall be responsible for the disconnection of the water services and the sewer services for the property as well as the removal and trench-backfilling of the water and sewer in the parking-lot of 700 Madison, see the attached exhibit in the Reference Materials section. The Village will coordinate the disconnection of the gas service, electrical service, telephone service and cable television services. The Contractor shall verify that all utilities serving the property are disconnected prior to the start of any demolition activities. Disconnection letters for all utilities shall be received prior to any demolition activities beginning. The Village will locate the existing water supply service (s) and sewer services (s) for the property, details for the work below:

The Contractor shall abandon the water service at the point of connection with the Village watermain in the street; pavement restoration on Madison St shall

match the existing pavement-section (assumed pavement section to be 10" PCC Base High-Early, 5" HMA N70). All trenches shall be back-filled with virgin CA-6 to the proposed grade constructed in lifts not more than 6 inches compacted with a vibratory-plate compactor. The granular material shall be compacted to not less than 95% standard Proctor density. Aggregate CA-6 shall not be paid separately for this item. All aggregate placement shall be tested for compaction by an IDOT approved material-testing company at the cost of the Contractor. All tickets for aggregate shall be collected by the Contractor and delivered to the Village. Any lane closure for this work shall be implemented according to IDOT Standard 701606-10, the detail is included as an attachment at the end of this RFP. Any soils generated from this work shall not be paid with this item but handled and paid according to the section of the Detailed Specifications which discusses the handling of all soils. All valve boxes shall also be removed for each disconnected service and backfilled with virgin CA-6 as mentioned above. Any sidewalk impacted shall be restored with PCC 5 inch on 2 inch virgin CA-6. The granular material shall be compacted to not less than 95% standard Proctor density. The cost of disconnecting the water-service, pavement restoration, sidewalk restoration, valve-box removal, and all other associated work aforementioned shall be included in the cost of WATER SERVICE DISCONNECTION. Any questions regarding the disconnections of the public utilities in the ROW should be directed to the Water and Sewer, Mike Fenwick, at 708-358-5744 or Tim Buford at 708-983-4920

The Contractor shall abandon the sewer services at the point of connection with the main in the street. All abandoned sewer services shall be plugged at both ends with a minimum of two feet long of non-shrink concrete/mortar plugs; pavement restoration on Madison St shall match the existing pavement-section (assumed pavement section to be 10" PCC Base High-Early, 5" HMA N70). The trench shall be sawcut. All trenches shall be back-filled with virgin CA-6 to the proposed grade constructed in lifts not more than 6 inches compacted with a vibratory-plate compactor. The granular material shall be compacted to not less than 95% standard Proctor density. Aggregate CA-6 shall not be paid separately for this item. All aggregate placement shall be tested for compaction by an IDOT approved material-testing company at the cost of the Contractor. All tickets for aggregate shall be collected by the Contractor and delivered to the Village. Any lane closure for this work shall be implemented according to IDOT Standard 701606-10, the detail is included as an attachment at the end of this RFP. Any soils generated from this work shall not be paid with this item but handled and paid according to the section of the Detailed Specifications which discusses the handling of all soils. The total cost of this aforementioned work will be paid for at the contract unit price per EACH for SEWER SERVICE DISCONNECTION. Any questions regarding the disconnections of the public utilities in the ROW should be directed to the Water and Sewer Department, Mike Fenwick, at 708-358-5744 or Tim Buford at 708-983-4920.

At the discretion of the Village of Oak Park Project Engineer in the case that a water or sewer line cannot be located from the atlas, the location of the sewer or water-services shall be located and paid for at the contract unit price Foot as EXPLORATION TRENCH, the depth is approximated between 5'-10' in depth. All exploration trenches shall be backfilled by the end of the day, or covered with steel-plates. Restoration of any R.O.W caused by exploration trenches shall be included in the cost of EXPLORATION TRENCH.

The Water & Sewer department will be onsite to inspect the disconnection of the Village of Oak Park utilities, and 3 working days advanced notice is required prior to water and sewer disconnection work. Please contact the Water and Sewer Department, Mike Fenwick, at 708-358-5744 or Tim Buford at 708-983-4920.

9. An asbestos building inspection is currently being performed and the report will be distributed as an addendum. A licensed asbestos abatement contractor shall remove and dispose of all asbestos for the property prior to demolition work. The Village of Oak Park will arrange an independent third party consultant to take post-abatement air clearance tests, any other necessary clearance tests will be at the cost of and responsibility of the contractor. No adjustment to the unit price during construction shall be allowed, all work relating to the complete abatement and disposal of all asbestos in the building shall be included in the cost of ASBESTOS ABATEMENT AND DISPOSAL. The asbestos ACM report appendices are available on drop-box, the link is shown in Section 1, S

10. Should the Contractor encounter any environmental concerns during the utility disconnections, or site grading work, the Contractor shall stop work and immediately notify the Village of the concern. The Village, or its environmental consultant, shall provide direction for future work. All costs associated with additional work for environmental remediation work, except asbestos abatement and handling and disposal of soils, shall be paid according to Article 109.04 of the Standard Specifications for Road and Bridge Construction.

    The Contractor shall notify the Village 3 working days in advance of any demolition or utility work occurring which will involve excavations or trenching. The Contractor shall remove and dispose of all soils resulting from demolition and utility disconnection activities according to the following:

    Soils at 700 Madison St shall not be considered CCDD unless as otherwise directed by Village Environmental Consultant, and shall be treated as non-special waste. Existing non-special waste soils generated from demolition or utility activities shall be stockpiled on-site with polyurethane sheeting underneath and completely covering the pile(s) until hauled for disposal. The Village's Environmental Consultant shall oversee excavation work and provide direction to the Contractor if soils resulting from excavations shall be stockpiled individually for each excavation or if they can be combined into one or multiple pile(s). The Village's Environmental Consultant will sample and test stockpiled soils and assist with coordinating disposal of the soils. All costs

associated with soil removal, double-handling, and disposal shall be included in the unit price for HANDLING AND DISPOSAL OF NON-SPECIAL WASTE.

Any existing soils at 700 Madison St deemed by the Village Environmental consultant as non- contaminated should be removed and disposed as CCDD. All costs associated with soil removal, handling, and disposal shall be included in the unit price for EARTH EXCAVATION. Current CCDD regulations require pH sampling of all soils prior to acceptance at CCDD facilities. The Village of Oak Park will supply IEPA Uncontaminated Soil Certification Form LPC-663 certifying clean soils for applicable portions of 700 Madison St.

11. The CONTINGENT CASH ALLOWANCE is included to fund compliance with Clean Construction Demolition Debris (CCDD) Regulations. It shall be used as necessary for professional services, permit costs, and additional work approved by the Village of Oak Park which cannot be precisely determined prior to contract bidding. The Lump Sum price of $25,000 must be included in all contract bids, included in the unit price for CONTINGENT CASH ALLOWANCE.

12. The Village is anticipating that disconnections for the ComEd and NICOR by the end of September, early October. At that time letters of Disconnection will be provided to the Contractor. The Contractor will not be compensated for any downtime or re-mobilization for time between the end of asbestos and the electric dis-connections being performed, working-days will not be charged either during that time. In the case that there is an issue with the timing of the electric disconnection for the building and power is disconnected before or during asbestos abatement, upon the Village's request the contractor shall provide a generator(s) to power all asbestos operations at the building. The generator shall meet all state and federal requirements for noise and emissions. All costs associated with mobilizing, setting up, fueling, and using the generator shall be included in the unit price for GENERATOR. This item will only be used if the Village is unable to time the disconnections with ComEd.

13. The building-slab for 700 Madison and unground storage tank shall be completely removed, including any sub-base material. The foundations/footings and all drainage-appurtenances along all sides of the building shall be completely removed, including any sub-base material. No adjustment in payment will be made for variances in the thickness of the building-slab, foundations/footings, or the sub-base materials. The cost of removing the building-slab, the foundations/footings and related appurtenances shall be included in the cost of BUILDING DEMOLITION.

    The footing-removal, interior-plumbing, and underground tank excavations shall be back-filled with virgin CA-6 constructed in lifts not more than 6 inches, compacted with a vibratory-plate compactor, up to 6" below the proposed-grade. The granular material shall be compacted to not less than 95% standard Proctor density. All aggregate placement shall be tested for compaction by an IDOT approved material-testing company at the cost of the Contractor. All tickets for aggregate shall be collected by the Contractor and delivered to the Village. The Trench-backfilling of all removed footings and building-plumbing shall be included in the cost of BUILDING DEMOLITION.

The footprint of the building-slab excavations shall be back-filled with CA-6 to the proposed-grade, constructed in lifts not more than 6 inches, with a minimum thickness of 6". Recycled CA-6 may be used for this but must be approved by the Engineer prior to installation; source-certification must be provided; existing CA-6 from the site is not acceptable. The granular material shall be compacted to not less than 95% standard Proctor density. All aggregate placements shall be tested for compaction by an IDOT approved material-testing company at the cost of the Contractor. The center of the property shall be constructed to a proposed-grade that allows positive drainage (1% minimum to the south of the property). All tickets for aggregate shall be collected by the Contractor and delivered to the Village. The cost of aggregate placement for the removed building-slab shall be included in the unit price for PLACEMENT OF AGGREGATE-BASE, 6" & VARIES.

14. At the conclusion of the project, permanent galvanized chain link fencing shall be installed per the site-plan exhibit. The fencing shall be a height of 4ft with a swing gate to allow vehicles access to the property from Euclid Ave. The gate must be a minimum of 10 ft. and shall swing into the property. Contractor will have the option to power drive posts into ground if concrete slab is not found underneath pavement for areas along the parking lot. When posts are being installed in the foot print of 700 Madison St, coring and a concrete foundation can be used to insure stability of post. The post shall be a minimum of two feet below grade. Upon completion the Engineer will inspect the fence to insure it is structurally stable and provide a lock for the gate. The cost of all other associated work aforementioned shall be included in the cost of FENCE INSTALLATION.

15. Any temporary dewatering needed to complete the demolition work will be considered included in the cost of the BUILDING DEMOLITION.

16. The Contractor shall provide a complete project report which includes size and depth measurements, locations marked on the plat of survey, and photographs of all excavations done as part of the building demolition and utility disconnections. Excavation areas shall be labeled and the labels shall correspond to photographs, density or material testing reports for each excavation. This file is not required to be CAD but must be legible and to scale. 5% retainage will be held until the report is submitted, reviewed, revisions made, and approved. The cost of the aforementioned work shall be included in the cost of the BUILDING DEMOLITION.

17. Temporary bracing of the building during demolition to prevent the building collapsing into the public Right of Way or onto adjacent properties, shall be included in the cost of BUILDING DEMOLITION.

18. Pre-construction photographs: Before starting any work, take photographs of the demolition site and surrounding properties, including existing items to remain during construction, from different vantage points as directed by the Village.
    a. Flag limits of construction before taking construction photographs.
    b. Take a sufficient number of photographs at the demolition site to show existing conditions adjacent to property before starting the Work.

c. Take a sufficient number of photographs at the demolition site of existing buildings either on or adjoining property to accurately record physical conditions at start of construction.
d. Take additional photographs as required to record conditions that might be misconstrued as damage caused by demolition and salvage operations.

This shall be compiled in a report, each picture labeled in terms of the vantage point and item being shown. This report shall be submitted to the Village prior to the beginning of demolition activities, this work shall be included in the cost of BUILDING DEMOLITION.

19. Dust and Mud Control:

a. Take Necessary precautions to control dust and mud associated with the Work, subject to the approval of the Village.
    i. In dry weather, spray dusty areas with water in order to control dust.
        1. If the Contractor desires to use water from fire hydrants, meters and keys shall be obtained from the Water and Sewer Department with a $1500.00 deposit. Upon Return of his/her equipment, the Contractor shall be billed for the water used at the current rate. This applies to all pay items which require using water.
        2. Fire hydrants shall be accessible at all times to the Fire Department. No materials or other obstructions shall be placed closer to a fire hydrant than 15 (fifteen) feet. Any arrangements of less than 15 feet must be approved by the Fire Department.
    ii. Apply calcium chloride having a minimum chemical content of 77 percent calcium chloride at an application rate of 3 pounds per square yard of surface covered at locations as directed by the Village.
b. Take necessary steps to prevent the tracking of mud onto adjacent streets and highways.
    i. Wash mud resulting from the construction traffic off the adjacent streets and highways.
    ii. Clean all permanent roadways used for construction activities by using motorized street sweeper that utilizes vacuum and water to pick up debris, when directed by the Village.

This work shall be included in the cost of BUILDING DEMOLITION.

20. A Pre-Demolition meeting, shall be conducted prior to commencing work, at a location selected by the Village, the managing personnel of the Contractor shall be in attendance. During this meeting, methods and procedures related to demolition will be reviewed including, but not limited to the following:

e. Inspect and discuss condition of building to be demolished
f. Distribution of contact information for Village stake-holders, Village of Oak Park staff members, Police, and Fire.

g. Review and finalize demolition schedule and verify availability of demolition personnel, equipment, and facilities needed to make progress and avoid delays.
h. Review and finalize protection requirements.
i. Review procedures for noise control and dust Control. Village ordinances shall be followed for the hours of allowed construction.
j. Review procedures for protection of adjacent buildings, site improvements, trees and landscaping to remain.

21. An underground storage tank(s) (UST) located in the North West corner of the parking lot adjacent to the Car-X has been identified by the unground piping that is surfaced. The contractor will be responsible of determining the size of UST, removing the entirety of the underground storage tanks, piping, vents, and any appurtenances, including any sub-base material shall be completely removed and disposed. The UST(s) are believed to be less than a total of 550 gallons. If the tank(s) size is larger than a total of 550 gallons, the additional cost of removal and disposal shall be paid according to Article 109.04 of the Standard Specification for Road and Bridge Construction. The contents of the UST(s) are unknown. This work shall be performed by a company licensed for UST decommissioning and removal in Illinois, and licensed for special waste hauling; and all laborers and operators shall have 40-hour HAZMAT training and HAZWOPER and Right to Know Training. A permit from the Fire Marshal and any other required permits shall be acquired by the Contractor at the cost of the Contractor. All contents shall be pumped out and shall be disposed of in accordance to all local, state, and federal requirements. The Village's Environmental Consultant and the State Fire Marshall shall be onsite during all removal work related to the underground storage tanks. It is the responsibility of the Contractor for all coordination with the State Fire Marshall. The tanks and all appurtenances shall be disposed by the Contractor. The tank(s) excavations shall be back-filled with CA-1, constructed up to 6" below the proposed grade. The remaining 6" to be graded flush with a minimum of 6 inches of aggregate base (CA-6), which is paid separately as PLACEMENT OF AGGREGATE-BASE (CA-6), 6"& VAR. The granular material shall be compacted to not less than 95% standard Proctor density. All aggregate placement shall be tested for compaction by an IDOT approved material-testing company at the cost of the Contractor. All tickets for aggregate shall be collected by the Contractor and delivered to the Village. All work aforementioned shall be included in the cost of UNDERGROUND STORAGE TANK(S)

    All existing soils generated from UST activities shall be stockpiled on-site with polyurethane sheeting underneath and completely covering the pile(s) until hauled for disposal. The Village's Environmental Consultant shall oversee excavation work and provide direction to the Contractor if soils resulting from excavations shall be stockpiled individually for each excavation or if they can be combined into one or multiple pile(s). The Village's Environmental Consultant will sample and test stockpiled soils and assist with coordinating disposal of the soils. All costs associated with soil removal, handling, and disposal shall be included in the unit price for HANDLING AND DISPOSAL OF NON-SPECIAL WASTE.

Section III. Proposal Form

The undersigned proposes to furnish all materials, labor and equipment necessary to perform the work as specified in the Specifications herein:

The following page outlines the costs associated with completing the demolition activities.

Demolition and Site Preparation:

700 Madison St.

(A) Building Demolition	**$_____L Sum**
(B) Asbestos Abatement and Disposal *	**$_____L Sum**
(C) Placement of Aggregate-Base (CA-6), 6" & Var. **	$_____/Ton
(220 Ton.)	**$_____Total**
(D) Sewer Service Disconnection	$_____/Each
(1Each.) ****	**$_____Total**
(E) Water Service Disconnection	$_____/Each
(1 Each.) ******	**$_____Total**
(F) Exploration Trench ********	$_____/Foot
(25 Foot)	**$_____Total**
(G) Fence Installation	$_____/Foot
(320 Foot)	**$_____Total**
(H) Generator	$_____/Day
(10 days)	**$_____Total**
(I)Earth Excavation ***	$_____/Ton
(50 Ton.)	**$_____Total**
(J)Handling and Disposal of Non-Special Waste ***	$_____/Ton
(150 Ton.)	**$_____Total**
(K) Underground Storage Tank(s) Removal	**$_____L Sum**
(L) Contingent Cash Allowance	$25,000 Total

Total Cost. **$_____**

List Addendums in receipt of:_____

* The thickness of the asbestos may vary. No adjustment in the unit-price will be allowed due to thickness variations.

** This item will be paid for by tonnage, from the extents of the desired removal stated in section II at a thickness of 6" to the proposed-grade as noted in Section II. The quantity shown is an engineering probable estimate. No adjustment in the unit-price will be allowed due to adjustment in quantity.

*** Indicates that this item may vary as the quantity is unknown and may vary. This item will be paid for by tonnage, from the extents of the desired removal as noted in Section II to the proposed-grade. No adjustment in the unit-price will be allowed due to adjustment in quantity.

****The Village has located the services and pipes based from a preliminary investigation. No adjustment in the unit-price will be allowed due to adjustment in quantity.

*****This item may vary as the location is approximate. The estimated depth is approximately 5'-10' in depth. No adjustment in the unit-price will be allowed due to depth or adjustment in quantity.

Section IV. Proposal Evaluation

Proposals will be evaluated by Village Staff. Evaluation will be based on criteria outlined herein which may be outweighed by the Village in a manner it deems appropriate. All proposals will be evaluated using the same criteria and weighting. The Village reserves the right during the term of the agreement to request additional services in addition to those specified in the Proposal form with payment for those additional services to be mutually agreed upon between the Village and the Contractor. The criteria used will be:

A. Responsiveness to RFP

The Village will consider all the materials submitted to determine whether the Contractor's offering is in compliance with this RFP.

B. Ability to Perform Required Services

The Village will consider all the material submitted by each Contractor, and other relevant material it may otherwise obtain, to determine whether the proposer is capable of and has a history of successfully completing projects of this type.

C. Experience and Relevant Knowledge

The Village will assess the experience and relevant knowledge of the Contractor.

D. Cost Proposal

The Village will evaluate the overall cost effective approach to providing the services requested in this RFP.

E. Optional Interviews and/or Site Visits

The Village may, at its sole option, conduct interviews and/or site visits as part of the final selection process. Teleconferencing is an acceptable option.

RESPONDENT CERTIFICATION

PROPOSAL SIGNATURE: _____
State of _____)
County of _____)
_____,
TYPE NAME OF SIGNEE

being first duly sworn on oath deposes and says that the Respondent on the above proposal is organized as indicated below and that all statements herein made on behalf of such Respondent and that this deponent is authorized to make them, and also deposes and says that he has examined and carefully prepared their bid proposal from the Contract Exhibits and Specifications and has checked the same in detail before submitting this proposal or bid; that the statements contained herein are true and correct.

Signature of Respondent authorizes the Village of Oak Park to verify references of business and credit at its option.

Signature of Respondent shall also be acknowledged before a Notary Public or other person authorized by law to execute such acknowledgments.

Dated _____

_____
Organization Name

(Seal - If Corporation)

By _____
Authorized Signature

_____
Address

_____
Telephone

Subscribed and sworn to before me this _____ day of _____, 2018.

_____
In the state of _____. Notary Public

My Commission Expires: _____
(Fill Out Applicable Paragraph Below)

(a) Corporation

The Respondent is a corporation, which operates under the legal name of
_____
and is organized and existing under the laws of the State of
_____.

The full names of its Officers are:

President _____
Secretary _____

Treasurer _____

The corporation does have a corporate seal. (In the event that this bid is executed by a person other than the President, attach hereto a certified copy of that section of Corporate By-Laws or other authorization by the Corporation which permits the person to execute the offer for the corporation.)

(b) Partnership

Name, signature, and addresses of all Partner

_____
_____
_____
_____

The partnership does business under the legal name of _____ which name is registered with the office of _____ in the county of _____ in the state of _____.

(c) Sole Proprietor

The Respondent is a Sole Proprietor whose full name is _____.
If the Respondent is operating under a trade name said trade name is _____ which name is registered with the office of _____ in the county of _____ in the state of _____.

Signed _____
Sole Proprietor

Oak Park

Attachment I. RESPONDENT CERTIFICATION

_____, as part of its bid on a contract for
(name of Respondent)

Demolition services provided at the 700 Madison St property, referred to in whole as the 'Building Demolition 700 Madison St." project, hereby certifies that said Respondent is not barred from bidding on the aforementioned contract as a result of a violation to either Section 33E-3 or 33E-4 of Article 33E of Chapter 38 of the Illinois Revised Statutes or Section 2-6-12 of the Oak Park Village Code relating to "Bidding Requirements".

By:_____
(Authorized Agent of Respondent)

Subscribed and sworn to
before me this ___ day
of _____, 2018.

_____
(Notary Public)

Oak Park

Attachment II. TAX COMPLIANCE AFFIDAVIT

_____, being first duly sworn, deposes and says:

that he/she is _____ of
(partner, officer, owner, etc.)

_____.
(bidder selected)

The individual or entity making the foregoing proposal or proposal certifies that he/she is not barred from entering into an agreement with the Village of Oak Park because of any delinquency in the payment of any tax administered by the Department of Revenue unless the individual or entity is contesting, in accordance with the procedures established by the appropriate revenue act, liability for the tax or the amount of the tax. The individual or entity making the proposal or proposal understands that making a false statement regarding delinquency in taxes is a Class A Misdemeanor and, in addition, voids the agreement and allows the municipality to recover all amounts paid to the individual or entity under the agreement in civil action.

_____
By:
Its:

_____
(name of bidder if the bidder is an individual)
(name of partner if the bidder is a partnership)
(name of officer if the bidder is a corporation)

The above statement must be subscribed and sworn to before a notary public.

Subscribed and sworn to before me this _____ day of _____, 2018.

_____
Notary Public's Signature - Notary Public Seal -

Minority Business and Women Business Enterprises Requirements

The Village of Oak Park in an effort to reaffirm its policy of non-discrimination, encourages and applauds the efforts of bidders and subcontractors in taking affirmative action and providing Equal Employment Opportunity without regard to race, religion, creed, color, sex, national origin, age, handicap unrelated to ability to perform the job or protected veteran's status.

Reporting Requirements

The following forms must be completed in their entirety, notarized and included as part of the proposal document. Failure to respond truthfully to any question on the list or failure to cooperate fully with further inquiry by the Village of Oak Park will result in disqualification of your proposal.

Oak Park

Attachment III. ORGANIZATION OF BIDDING FIRM

Please fill out the applicable section:

A. Corporation:
The Contractor is a corporation, legally named _____ and is organized and existing in good standing under the laws of the State of _____. The full names of its Officers are:

President_____

Secretary_____

Treasurer_____

Registered Agent Name and Address: _____
The corporation has a corporate seal. (In the event that this Bid is executed by a person other than the President, attach hereto a certified copy of that section of Corporate By-Laws or other authorization by the Corporation that permits the person to execute the offer for the corporation.)

B. Sole Proprietor:
The Contractor is a Sole Proprietor. If the Contractor does business under an Assumed Name, the

Assumed Name is _____, which is registered with the Cook County Clerk. The Contractor is otherwise in compliance with the Assumed Business Name Act, 805 ILCS 405/0.01, et. seq.

C. Partnership:
The Contractor is a Partnership which operates under the name _____

The following are the names, addresses and signatures of all partners:

_____ _____

_____ _____
Signature Signature

(Attach additional sheets if necessary.) If so, check here _____.
If the partnership does business under an assumed name, the assumed name must be registered with the Cook County Clerk and the partnership is otherwise in compliance with the Assumed Business Name Act, 805 ILCS 405/0.01, et. seq.
D. Affiliates: The name and address of any affiliated entity of the business, including a description of the affiliation: _____

_____
Signature of Owner

Attachment IV. Compliance Affidavit

I, _____being first duly sworn on oath depose and state as follows:
(Print Name)

1. I am the (title) _____ of the Proposing Firm ("Firm") and am authorized to make the statements contained in this affidavit on behalf of the Firm.
2. The Firm is organized as indicated on Exhibit A to this Affidavit, entitled "Organization of Proposing Firm," which Exhibit is incorporated into this Affidavit as if fully set forth herein.
3. I have examined and carefully prepared this proposal based on the Request for Proposals and verified the facts contained in the proposal in detail before submitting it.
4. I authorize the Village of Oak Park to verify the Firm's business references and credit at its option.
5. Neither the Firm nor its affiliates[1] are barred from proposing on this project as a result of a violation of 720 ILCS 5/33E-3 or 33E-4 relating to bid rigging and bid rotating, or Section 2-6-12 of the Oak Park Village Code related to "Proposing Requirements".
6. The Proposing Firm has the M/W/DBE status indicated below on the form entitled "EEO Report."
7. Neither the Firm nor its affiliates is barred from agreement with the Village of Oak Park because of any delinquency in the payment of any debt or tax owed to the Village except for those taxes which the Firm is contesting, in accordance with the procedures established by the appropriate revenue act, liability for the tax or the amount of the tax. I understand that making a false statement regarding delinquency in taxes is a Class A Misdemeanor and, in addition, voids the agreement and allows the Village of Oak Park to recover all amounts paid to the Firm under the agreement in a civil action.
8. I am familiar with Section 13-3-2 through 13-3-4 of the Oak Park Village Code relating to Fair Employment Practices and understand the contents thereof; and state that the Proposing Firm is an "Equal Opportunity Employer" as defined by Section 2000(E) of Chapter 21, Title 42 of the United States Code Annotated and Federal Executive Orders #11246 and #11375 which are incorporated herein by reference. **Also complete the attached EEO Report or Submit an EEO-1.**
9. I certify that the Contractor is in compliance with the Drug Free Workplace Act, 41 U.S.C.A, 702.

[1] Affiliates means: (i) any subsidiary or parent of the bidding or contracting business entity, (ii) any member of the same unitary business group; (iii) any person with any ownership interest or distributive share of the bidding or contracting business entity in excess of 7.5%; (iv) any entity owned or controlled by an executive employee, his or her spouse or minor children of the bidding or contracting business entity.

Signature:_____ Printed Name_____

Name of Business:_____ Your Title: _____

Business Address:_____

(Number, Street, Suite #) (City, State & Zip)

Telephone:_____ Fax: _____ Web Address: _____

Subscribed to and sworn before me this _____ day of _____, 2015.

_____

Notary Public

M/W/DBE STATUS AND EEO REPORT

1. Contractor Name:_____
2. Check here if your firm is:
   - ☐ Minority Business Enterprise (MBE) (A firm that is at least 51% owned, managed and controlled by a Minority.)
   - ☐ Women's Business Enterprise (WBE) (A firm that is at least 51% owned, managed and controlled by a Woman.)
   - ☐ Owned by a person with a disability (DBE) (A firm that is at least 51% owned by a person with a disability)
   - ☐ None of the above

Failure to respond truthfully to any questions on this form, failure to complete the form or failure to cooperate fully with further inquiry by the Village of Oak Park will result in disqualification of this Bid. For assistance in completing this form, contact the Department of Public Works at 708-358-5700.

[Submit copies of any W/W/DBE certifications]

3. What is the size of the firm's current stable work force?
   _____ Number of full-time employees
   _____ Number of part-time employees
4. Similar information will be requested of all subcontractors working on this agreement. Forms will be furnished to the lowest responsible Contractor with the notice of agreement award, and these forms must be completed and submitted to the Village before the execution of the agreement by the Village.

Signature: _____

Date: _____

EEO REPORT

Please fill out this form completely. Failure to respond truthfully to any questions on this form, or failure to cooperate fully with further inquiry by the Village of Oak Park will result in disqualification of this proposal. An incomplete form will disqualify your proposal. For assistance in completing this form, contact the Purchasing Department at 708-358-5473.

An EEO-1 Report may be submitted in lieu of this report

*Contractor Name*_____
*Total Employees*_____

Job Categories	Total Employees	Total Males	Total Females	Males				Females				Total Minorities
				Black	Hispanic	American Indian & Alaskan Native	Asian & Pacific Islander	Black	Hispanic	American Indian & Alaskan Native	Asian & Pacific Islander	
Officials & Managers												
Professionals												
Technicians												
Sales Workers												
Office & Clerical												
Semi-Skilled												
Laborers												
Service Workers												
TOTAL												
Management Trainees												
Apprentices												

This completed and notarized report must accompany your Proposal. It should be attached to your Affidavit of Compliance. Failure to include it with your Proposal will be disqualify you from consideration.

_____, *being first duly sworn, deposes and says that he/she is the*_____
(Name of Person Making Affidavit) *(Title or Officer)*
of _____*and that the above EEO Report information is true and accurate and is submitted with the intent that it*

be relied upon. Subscribed and sworn to before me this _____ *day of* _____, *2015.*

_____ _____
(Signature) *(Date)*

Oak Park

Attachment V. No Proposal Explanation

If your firm does not wish to submit a proposal, please provide us with Attachment V and include in the space below any comments you may have concerning this proposal or any related factors that prevented you from submitting a response.

Proposal No: RFP #18-11
Project Name: "700 Madison St Building Demolition."
Date Issued: August 30, 2018

Comments:

This page is intentionally blank

Oak Park

RETURN WITH BID

Attachment VI.

Village of Oak Park, IL
Proposal Bid Bond

WE_____
_____ as PRINCIPAL, and _____
_____ as SURETY,
are held and firmly bound unto the Village of Oak Park, IL (hereafter referred to as "VOP") in the penal sum of 5% of the total bid price, or for the amount specified in Article 102.09 of the "Standard Specifications for Road and Bridge Construction" in effect on the date of invitation for bids. We bind ourselves, our heirs, executors, administrators, successors, and assigns, jointly to pay to the VOP this sum under the conditions of this instrument.

WHEREAS THE CONDITION OF THE FOREGOING OBLIGATION IS SUCH that, the said PRINCIPAL is submitting a written proposal to the VOP acting through its awarding authority for the construction of the work designated as the above section.

THERFORE if the proposal is accepted and a contract awarded to the PRINCIPAL by the VOP for the above-designated section and the PRINCIPAL shall within fifteen (15) days after award enter into a formal contract, furnish surety guaranteeing the faithful performance of the work, and furnish evidence of the required insurance coverage, all as provided in the "Standard Specifications for Road and Bridge Construction" and applicable Supplemental Specifications, then this obligation shall become void; otherwise it shall remain in full force and effect.

IN THE EVENT the VOP determines the PRINCIPAL has failed to enter into a formal contract in compliance with any requirements set forth in the preceding paragraph, then the VOP acting through its awarding authority shall immediately be entitled to recover the full penal sum set out above, together with all court costs, all attorney fees, and any other expense of recovery.

IN TESTIMONY WHEREOF, the said PRINCIPAL and the said SURETY have caused this instrument to be signed by their respective officers this
_____ day of _____A.D. 20_____

PRINCIPAL

_____ _____
(Company Name) (Company Name)

By:_____
By:_____
(Signature & Title) (Signature & Title)
(If PRINCIPAL is a joint venture of two or more contractors, the company names, and authorized signatures of each contractor must be affixed.)

SURETY

_____ _____
(Name of Surety) (Signature of Attorney-in-Fact)

STATE OF ILLINOIS,
COUNTY OF _____
I, _____, a Notary Public in and for said county, do hereby certify that _____
(Insert names of individuals signing on behalf of PRINCIPAL & SURETY.)
who are each personally known to me to be the same persons whose names are subscribed to the foregoing instrument on behalf of PRINCIPAL and SURETY, appeared before me this day in person and acknowledged respectively, that they signed and delivered said instrument as their free and voluntary act for the uses and purposes therein set forth.

Given under my hand and notary seal this _____day of _____A.D. 20_____

NOTICE
1. Improper execution of this form (i.e. missing signatures or seals or incomplete certification) will result in bid being declared irregular.
2. If bid bond is used in lieu of proposal guaranty check, it must be on this form and must be submitted with bid.

My commission expires _____.

_____
Notary Public

RETURN THIS PAGE WITH BID

Attachment VII.

Contract Bond

NAME AND ADDRESS OF CONSTRACTOR_____, as PRINCIPAL, and NAME AND ADDRESS OF SURETY_____, as SURETY, is held and firmly bound unto the Village of Oak Park (hereafter referred to as "Village") in the penal sum of **CONTRACT AMOUNT IN WORDS ($ AMOUNT IN NUMBERS)**, well and truly to be paid to the Village, for the payment of which its heirs, executors, administrators, successors and assigns, are bound jointly to pay to the Village under the conditions of this instrument.

WHEREAS, THE CONDITION OF THE FOREGOING OBLIGATION IS SUCH that, the Principal has entered into a written contract with the Village, acting through its President and Board of Trustees, for the construction of work, which contract is hereby referred to and made a part hereof as if written herein at length, and whereby the Principal has promised and agreed to perform the work in accordance with the terms of the contract, and has promised to pay all sums of money due for any labor, materials, apparatus, fixtures or machinery furnished to such Principal for the purpose of performing such work, including paying not less than the prevailing rate of wages in Cook County, where the work is for the construction of any public work subject to the Prevailing Wage Act, and has further agreed to save and indemnify and keep harmless the Village against all liabilities, judgments, costs and expenses which may in any manner accrue against the Village in consequence of granting such contract or which may in any manner result from the carelessness or neglect of the Principal, his agents, employees or workmen in any respect whatever; and has further agreed that this bond will inure to the benefit of any person, firm, company, or corporation, to whom any money may be due from the Principal, subcontractor or otherwise, for any such labor, materials, apparatus, fixtures or machinery so furnished and that suit may be maintained on such bond by any such person, firm, company, or corporation, for the recovery of any such money.

NOW THEREFORE, if the Principal shall well and truly perform the work in accordance with the terms of the contract, and shall pay all sums of money due or to become due for any labor, materials, apparatus, fixtures or machinery furnished to it for the purpose of constructing such work, and shall commence and complete the work within the time prescribed in the contract, and shall pay and discharge all damages, direct and indirect, that may be suffered or sustained on account of such work during the time of performance thereof and until the work shall have been accepted, and shall save and indemnify and keep harmless the Village against all liabilities, judgments, costs and expenses which may in any manner accrue against the Village in consequence of granting such contract or which may in any manner result from the carelessness or neglect of the Principal, his agents, employees or workmen in any respect whatever; and shall in all respects fully and faithfully comply with all the provisions, conditions, and requirements of the contract, then this obligation will be void; otherwise it will remain in full force and effect.

IN WITNESS WHEREOF, the PRINCIPAL and the SURETY have caused this instrument to be signed by their respective officers this _____ day of _____**,** 2016.

NAME OF PRINCIPAL

By: _____
Signature

By: _____
Printed Name

Its: _____
Title

Subscribed to and Sworn before me on the

_____ day of _____, 2016.

_____
Notary Public

NAME OF SURETY

By: _____
Signature of Attorney-in-Fact

Subscribed to and Sworn before me on the

_____ day of _____, 2016.

_____
Notary Public

Attachment VIII.
INDEPENDENT CONTRACTOR AGREEMENT

THIS INDEPENDENT CONTRACTOR AGREEMENT ("Contract") is entered into on this _____ day of _____, 2018, by and between the Village of Oak Park, an Illinois home rule municipal corporation (hereinafter the "Village"), and _____, a _____ (hereafter the "Contractor").

WHEREAS, Contractor submitted a Proposal dated _____, _____, a copy of which is attached hereto and incorporated herein by reference, to provide _____ (hereinafter referred to as the "Work") for the _____(hereinafter referred to as the "Project") pursuant to the Village's Request for Proposals dated _____, _____, incorporated herein by reference as though fully set forth; and

WHEREAS, the Contractor represented in said Proposal that it has the necessary personnel, experience, and competence to promptly complete the Project and the Work required hereunder (hereinafter referred to as the "Work"); and

WHEREAS, Contractor shall perform the Work pursuant to the terms and conditions of this Contract.

NOW, THEREFORE, in consideration of the premises and the mutual promises contained in this Contract, and other good and valuable consideration received and to be received, it is mutually agreed by and between the parties as follows:

1. RECITALS INCORPORATED

The above recitals are incorporated herein as though fully set forth.

2. SCOPE OF WORK

Contractor shall perform the Work for the Project in accordance with its Proposal for a price not to exceed $_____ plus $_____ contingency for unforeseen conditions for a total cost of $_____ ("Contract Price"). Contractor shall complete the Work in accordance with any applicable manufacturers' warranties and in accordance with its Proposal, the Village's Request for Proposals, and this Contract, all of which, together shall constitute the "Contract Documents." The Contractor acknowledges that it has inspected the site(s) where the Work is to be performed and that it is fully familiar with all of the conditions at the site(s), and further that its

Proposal has adequately taken into consideration all of the conditions at the sites. The Contractor hereby represents and warrants that it has the skill and experience necessary to complete the Work in a good and workmanlike manner in accordance with the Contract Documents, and that the Work shall be free from defects. Contractor shall achieve completion of all work required pursuant to the Contract Documents by _____, _____ ("Contract Time"). The Contract Time is of the essence. In the event the Contractor fails to complete the Work on or before said date, the Village shall be entitled to liquidated damages in the amount of $500.00 per day for each day the Work remains uncompleted beyond the completion date set forth above. This amount is not a penalty, and the parties agree to said amount given the difficulties associated with determining or calculating damages to the Village in the event the Work is not completed on time. Contractor shall have no claim for damages, for compensation in excess of the Contract Price, or for a delay or extension of the Contract Time based upon conditions found at, or in the vicinity of, the site(s).

3. DESIGNATED REPRESENTATIVES

Contractor shall designate in writing a person to act as its designated representative with respect to the Work to be performed under this Contract who shall have the power and authority to make or grant or do all things, certificates, requests, demands, approvals, consents, notices and other actions required that are ministerial in nature or described in this Agreement for and on behalf of Contractor and with the effect of binding Contractor. The Village is entitled to rely on the full power and authority of the person executing this Contract on behalf of Contractor as having been properly and legally given by Contractor. Contractor shall have the right to change its designated representative by providing the Village with written notice of such change which notice shall be sent in accordance with Section 12 of this Agreement.

The Village's _____ shall be deemed the Village's authorized representative for purposes of this Agreement, unless applicable law requires action by the Corporate Authorities, and shall have the power and authority to make or grant or do those things, certificates, requests, demands, approvals, consents, notices and other actions required that are ministerial in nature or described in this Agreement for and on behalf of the Village and with the effect of binding the Village as limited by this Contract. Contractor is entitled to rely on the full power and authority of the person executing this Agreement on behalf of the Village as having been properly and legally given by the Village. The Village shall have the right to change its authorized representative by providing Contractor with written notice of such change which notice shall be sent in accordance with Section 12 of this Agreement.

4. TERM OF CONTRACT

Contractor shall perform the Work pursuant to this Contract beginning on the effective date as defined herein and ending on the date that the Work is completed as

determined by the Village. The Contractor shall invoice the Village for the Work provided pursuant to this Contract at the rates set forth in its Proposal. The term of this Contract may be extended in writing for additional periods of time pursuant to the consent of the parties.

5. PAYMENT SCHEDULE

Contractor shall, as a condition precedent to its right to receive any payment, submit to the Village an application for payment and such receipts, vouchers, and other documents as may be necessary to establish the Contractor's payment for all labor and material and the absence of any interest whether in the nature of a lien or otherwise of any party in any property, work, or fund with respect to the Work performed hereunder. Such documents shall include, where relevant, the following forms, copies of which are attached hereto:

(i) Contractor's sworn statement;
(ii) Contractor's partial or final waiver of lien;
(iii) Subcontractor's sworn statement(s); and
(iv) Subcontractor's partial or final waiver of lien.

Payment by the Village shall be conditioned upon an inspection by the Village of the Work completed and submission of required waivers by the Contractor. Payment by the Village shall in no way constitute a waiver of, or relieve the Contractor from, any defects in the work. All payments shall be made in accordance with the Illinois Local Government Prompt Payment Act, 50 ILCS 505/1 *et seq.* Final payment for any Work performed by the Contractor pursuant to an invoice by Contractor shall be made by the Village to the Contractor when Contractor has fully performed the work and the work has been approved by the Village and submission of required waivers and paperwork by Contractor. Approval of the work and issuance of the final payment by the Village shall not constitute a waiver of, or release Contractor from, any defects in the work.

The Village shall have the right to withhold from any payment due hereunder such amount as may reasonably appear necessary to compensate the Village for any actual or prospective loss due to Work which is defective or does not conform to the Contract Documents; damage for which Contractor is liable hereunder; liens or claims of liens; claims of third parties, subcontractors, or material men; or any failure of the Contractor to perform any of its obligations under this Contract. The Village may apply any money withheld or due Contractor hereunder to reimburse itself for any and all costs, expenses, losses, damages, liabilities, suits, judgments, awards, and attorney's fees incurred, suffered, or sustained by the Village and chargeable to Contractor.

6. TERMINATION

The Village may terminate this Contract for cause, which includes but is not necessarily limited to, the Contractor’s failure to perform the work pursuant to this Contract. The

Village shall provide the Contractor with five (5) days' written notice of a termination for cause pursuant to the provisions of Section 12 below. The Village may also terminate this Contract when it determines the same to be in its best interests by giving fourteen (14) days' written notice to Contractor pursuant to the provisions of Section 12 below. In such event, the Village shall pay to Contractor all amounts due for the work performed up to the date of termination.

7. COMPLIANCE WITH APPLICABLE LAWS

Contractor shall comply with all applicable laws, regulations, and rules promulgated by any federal, state, county, municipal and/or other governmental unit or regulatory body now in effect during the performance of the work. By way of example only and not as a limitation, the following are included within the scope of the laws, regulations and rules with which the Contractor must comply: all forms of workers' compensation Laws, all terms of the equal employment opportunity rules and regulations of the Illinois Department of Human Rights, statutes relating to contracts let by units of government, and all applicable civil rights and anti-discrimination laws and regulations.

8. INDEMNIFICATION

To the fullest extent permitted by law, Contractor shall waive any right of contribution against the Village and shall indemnify and hold harmless the Village and its officers, officials, employees, volunteers and agents from and against all claims, damages, losses and expenses, including, but not limited to, legal fees (attorney's and paralegal's fees, expert fees and court costs) arising out of or resulting from the performance of the Contractor's work, provided that any such claim, damage, loss or expense is attributable to bodily injury, sickness, disease or death, or injury to or destruction of property, other than the work itself, including the loss of use resulting therefrom, or is attributable to misuse or improper use of trademark or copyright-protected material or otherwise protected intellectual property, to the extent it is caused in whole or in part by any wrongful or negligent act or omission of Contractor, any subcontractor, anyone directly or indirectly employed by any of them or anyone for whose acts any of them may be liable. Such obligation shall not be construed to negate, abridge or otherwise reduce any other right to indemnity which the Village would otherwise have. Contractor shall similarly protect, indemnify and hold and save harmless, the Village, its officers, officials, employees, volunteers and agents against and from any and all claims, costs, causes, actions and expenses, including, but not limited to, legal fees incurred by reason of the Contractor's breach of any of its obligations under, or Contractor's default of, any provisions of this Contract. The indemnification obligations under this Section shall not be limited in any way by any limitation on the amount or type of damages, compensation, or benefits payable by or for the Contractor or any subcontractor under Workers' Compensation or Disability Benefit Acts or Employee Benefit Acts.

9. INSURANCE

Contractor shall at Contractor's expense secure and maintain in effect throughout the duration of this Contract, insurance of the following kinds and limits set forth in this Section. Contractor shall furnish "Certificates of Insurance" to the Village before beginning work on the Project pursuant to this Contract. All insurance policies shall be written with insurance companies licensed to do business in the State of Illinois and having a rating of at least A according to the latest edition of the Best's Key Rating Guide; and shall include a provision preventing cancellation of the insurance policy unless thirty (30) days prior written notice is given to the Village. This provision shall also be stated on each Certificate of Insurance: "Should any of the above described policies be canceled before the expiration date, the issuing company shall mail fifteen thirty (30) days written notice to the certificate holder named to the left."

The limits of liability for the insurance required shall provide coverage for not less than the following amounts, or greater where required by law:

(A) **Commercial General Liability:**

i. Coverage to include Broad Form Property Damage, Contractual and Personal Injury.

ii. Limits:

General Aggregate	$ 2,000,000.00
Each Occurrence	$ 1,000,000.00
Personal Injury	$ 1,000,000.00

iii. Coverage for all claims arising out of the Contractor's operations or premises and anyone directly or indirectly employed by the Contractor.

(B) **Workers' Compensation:**

i. Workers' compensation insurance shall be provided in accordance with the provisions of the laws of the State of Illinois, including occupational disease provisions, for all employees who perform the Work pursuant to this Contract, and if work is subcontracted pursuant to the provisions of this Contract, Contractor shall require each subcontractor similarly to provide workers' compensation insurance. In case employees engaged in hazardous work under this Contract are not protected under the Workers' Compensation Act, Contractor shall provide, and shall cause each subcontractor to provide, adequate and suitable insurance for the protection of employees not otherwise provided.

(C) **Comprehensive Automobile Liability:**

i. Comprehensive Automobile Liability coverage shall include all owned, hired, non-owned vehicles, and/or trailers and other equipment required to be licensed, covering personal injury, bodily injury and property damage.

ii. Limits:

Combined Single Limit	$1,000,000.00

(D) **Umbrella:**

i. Limits:

Each Occurrence/Aggregate	$5,000,000.00

(E) The Village, its officers, officials, employees, agents and volunteers shall be named as additional insureds on all insurance policies set forth herein except Workers' Compensation. The Contractor shall be responsible for the payment of any deductibles for said insurance policies. The coverage shall contain no special limitations on the scope of protection afforded to the Village, its officers, officials, employees, agents, and volunteers.

(F) Contractor understands and agrees that any insurance protection required by this Contract or otherwise provided by Contractor, shall in no way limit the responsibility to indemnify, keep and save harmless, and defend the Village, its officers, officials, employees, agents and volunteers as herein provided.

10. GUARANTY

Contractor warrants and guarantees that its Work provided for the Project to be performed under this Contract, and all workmanship, materials, equipment, and supplies performed, furnished, used, or installed under this Contract, performed, furnished, used, or installed under this Contract, shall be free from defects and flaws in workmanship or design; shall strictly conform to the requirements of this Contract; and shall be fit and sufficient for the purposes expressed in, or reasonably inferred from, this Contract. Contractor further warrants and guarantees that the strength of all parts of all manufactured materials, equipment, and supplies shall be adequate and as specified and that the performance requirements of this Contract shall be fulfilled.

Contractor shall, at no expense to the Village, correct any failure to fulfill the above guaranty that may appear at any time. In any event, the guaranty herein expressed shall not be sole and exclusive, and is additional to any other guaranty or warranty expressed or implied.

11. AFFIDAVIT OR CERTIFICATE

Contractor shall furnish any affidavit or certificate in connection with the work covered by this Contract as required by law.

12. NOTICES

Any notice required to be given by this Contract shall be deemed sufficient if made in writing and sent by certified mail, return receipt requested, by personal service, or by email or facsimile transmission to the persons and addresses indicated below or to such addresses and persons as either party hereto shall notify the other party of in writing pursuant to the provisions of this Section:

To the Village:	**To Contractor:**
Public Works Director	_____
Village of Oak Park	_____
201 South Boulevard	_____
Oak Park, Illinois 60302-4272	_____
708-358-5700	_____
Email: jwielebnicki@oak-park.us	Email:
Fax: 708-358-5711	Fax:_____

Mailing of such notice as and when above provided shall be equivalent to personal notice and shall be deemed to have been given at the time of mailing.

Notice by facsimile or email transmission shall be effective as of date and time of facsimile transmission, provided that the notice transmitted shall be sent on business days during business hours (9:00 a.m. to 5:00 p.m. Chicago time). In the event facsimile or email notice is transmitted during non-business hours, the effective date and time of notice is the first hour of the first business day after transmission.

13. AUTHORITY TO EXECUTE

The individuals executing this Contract on behalf of Contractor and the Village represent that they have the legal power, right, and actual authority to bind their respective parties to the terms and conditions of this Contract.

14. EFFECTIVE DATE

The effective date of this Contract as reflected above and below shall be the date that the Village Manager executes this Contract on behalf of the Village.

15. ENTIRE CONTRACT; APPROVAL OF SUBCONTRACTORS

This Contract, including the documents incorporated by reference herein, sets forth the entire Contract between the parties with respect to the accomplishment of the Work. No right or interest in this Contract shall be assigned, in whole or in part, by either party without the prior written consent of the other party. The Village reserves the right to approve the use of subcontractors to complete any portion of the Work and to approve any applicable contract between the Contractor and a proposed subcontractor to perform any of the Work. This Contract shall be binding upon the parties and upon their respective heirs, executors, administrators, personal representatives, successors, and assigns, except as herein provided.

16. INDEPDENDENT CONTRACTOR

Contractor shall have the full control of the ways and means of performing the Work referred to above and that the Contractor and its employees, representatives or subcontractors are not employees of the Village, it being specifically agreed that the Contractor bears the relationship of an independent contractor to the Village. The Contractor shall solely be responsible for the payment of all salaries, benefits and costs of supplying personnel for the Work.

17. CONTRACT BOND

Before commencing the work on the Project, Contractor shall furnish a Contract Bond. The Contract Bond shall be in an amount equal to 100% of the full amount of the Contract Price as security for the faithful performance of its obligations pursuant to the Contract Documents and as security for the payment of all persons performing labor and furnishing materials in connection with the Contract Documents. Such bond shall be on a standard AIA document, shall be issued by a surety satisfactory to the Village, and shall name the Village as a primary co-obligee. The Contract Bond shall become a part of the Contract Documents. The failure of Contractor to supply the required Contract Bond within ten (10) days after the Notice of Award or within such extended period as the Village may grant if the Contract Bond does not meet its approval shall constitute a default, and the Village may either award the Contract to the next lowest responsible proposer or re-advertise for proposals. A charge against Contractor may be made for the difference between the amount of Contractor's Proposal and the amount for which a contract for the Work is subsequently executed, irrespective of whether the amount thus due exceeds the amount of the bid guarantee.

18. GOVERNING LAW AND VENUE

This Contract shall be governed by the laws of the State of Illinois both as to interpretation and performance. Venue for any action pursuant to this Contract shall be in the Circuit Court of Cook County, Illinois.

19. AMENDMENTS AND MODIFICATIONS

This Contract may be modified or amended from time-to-time provided, however, that no such amendment or modification shall be effective unless reduced to writing and duly authorized and signed by the authorized representative of the Village and the authorized representative of the Contractor.

20. NON-WAIVER OF RIGHTS

No failure of either party to exercise any power given to it hereunder or to insist upon strict compliance by the other party with its obligations hereunder, and no custom or practice of the parties at variance with the terms hereof, nor any payment under this Contract shall constitute a waiver of either party's right to demand exact compliance with the terms hereof.

21. CONFLICT

In case of a conflict between any provision(s) of the Village's Request for Proposals or the Contractor's Proposal and this Contract, this Contract and the Village's Request for Proposals shall control to the extent of such conflict.

22. HEADINGS AND TITLES

The headings and titles provided in this Contract are for convenience only and shall not be deemed a part of this Contract.

23. COOPERATION OF THE PARTIES

The Village and Contractor shall cooperate in the provision of the Work to be provided by Contractor pursuant to this Contract and in compliance with applicable laws, including, but not limited to, the Illinois Freedom of Information Act, 5 ILCS 140/1 *et seq.* ("FOIA"), and the provision of any documents and information pursuant to a FOIA request. Contractor shall provide any and all responsive documents to the Village pursuant to a FOIA request at no cost to the Village.

24. COUNTERPARTS; FACSIMILE OR PDF SIGNATURES

This Contract may be executed in counterparts, each of which shall be considered an original and together shall be one and the same Contract. A facsimile or pdf copy of this Agreement and any signature(s) thereon will be considered for all purposes as an original.

[REMAINDER OF PAGE INTENTIONALLY LEFT BLANK -
SIGNATURE PAGE FOLLOWS]

IN WITNESS WHEREOF, the parties hereto have caused this Contract to be signed by their duly authorized representatives on the dates set forth below.

VILLAGE OF OAK PARK

_____

By: Cara Pavlicek
Its: Village Manager

Date: _____, ____

ATTEST

_____

By: Vicki Scaman
Its: Village Clerk

Date: _____, ____

_____

_____

By:
Its:

Date: _____, ____

ATTEST

_____

By:
Its:

Date: _____, ____

Reference 1

ALTA Survey

ALTA/ACSM LAND TITLE SURVEY & TOPOGRAPHIC SURVEY
OF
NE COR. OF OAK PARK AVE. & MADISON ST.
OAK PARK, IL

LOTS 10 TO 27, INCLUSIVE IN THE SUBDIVISION OF BLOCK 4 IN OGDEN AND JONES' SUBDIVISION OF THE SOUTHWEST QUARTER OF THE SOUTHEAST QUARTER OF SECTION 7, TOWNSHIP 39 NORTH, RANGE 13, EAST OF THE THIRD PRINCIPAL MERIDIAN, IN COOK COUNTY, ILLINOIS.

P.I.N. 16-07-418-006
16-07-418-007
16-07-418-008
16-07-418-014
16-07-418-020
16-07-418-017
16-07-418-018

STATE PLANE MERIDIAN

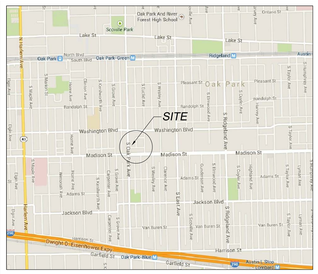

VICINITY MAP
NOT TO SCALE

UTILITY ATLAS NOTES:

J.U.L.I.E. DESIGN STAGE REQUEST
DIG NUMBER A0842037 RECEIVED 03-25-15 .

CONTACTS PROVIDED BY J.U.L.I.E. & LISTED BELOW WERE CONTACTED BY V3 VIA FAX, REQUESTING UTILITY ATLAS INFORMATION ON 03-25-15.

CONTACTS	RESPONSE
AT&T LOCAL SERVICE	RESPONDED "ALL CLEAR"
AT&T DISTRIBUTION	RESPONDED WITH ATLAS
COMCAST	NO RESPONSE
COM-ED	NO RESPONSE
VILLAGE OF OAK PARK	RESPONDED WITH ATLAS
MCI	RESPONDED "ALL CLEAR"
NICOR GAS	NO RESPONSE
DUPAGE WATER COMMISSION	RESPONDED "ALL CLEAR"
G4S TECHNOLOGY	RESPONDED "ALL CLEAR"
AT&T / T-TCG	RESPONDED WITH NOTE
EUCLID AVE. UNITED METHODIST	NO RESPONSE

BENCHMARK

SOURCE: PER VILLAGE OF OAK PARK BM SHEET

STATION DESIGNATION: BM#1
ESTABLISHED BY: VILLAGE OF OAK PARK
DATE: N/A

ELEVATION: 41.20 (PUBLISHED AND HELD)
DATUM: CCD
DESCRIPTION: HYDRANT (NE BOLT-TAGGED) AT THE NE CORNER OF MADISON ST AND OAK PARK AVE.

STATION DESIGNATION: BM#2
ESTABLISHED BY: VILLAGE OF OAK PARK
DATE: N/A

ELEVATION: 41.36 (PUBLISHED AND HELD)
DATUM: CCD
DESCRIPTION: HYDRANT (1ST BOLT PAST ARROW) AT THE NE CORNER OF WASHINGTON AND OAK PARK AVE.

SITE:

STATION DESIGNATION: SBM#1
ESTABLISHED BY: V3 COMPANIES
DATE: 03-27-15

ELEVATION: 39.512 (MEASURED)
DATUM: CCD
DESCRIPTION: (V3 CP101) SET CUT CROSS IN CONCRETE WALK AT NORTHWEST CORNER OF OAK PARK & MADISON STREET.

STATION DESIGNATION: SBM#2
ESTABLISHED BY: V3 COMPANIES
DATE: 03-27-15

ELEVATION: 39.51 (MEASURED)
DATUM: CCD
DESCRIPTION: (V3 CP102) SET CUT CROSS IN CONCRETE WALK AT NORTHEAST CORNER OF MADISON STREET & EUCLID AVENUE.

NOTES FROM SCHEDULE B

COVER LOTS 13 TO 23

ITEMS 1-10, 12-19, AND 22 ARE NOT PLOTTABLE.

	EXCEPTION	AFFECTS PROPERTY	NOTE
11	DEED DOC. 0519539014	YES	NOT PLOTTABLE
20	REMEDIATION LETTER	YES	NOT PLOTTABLE
21	AGREEMENT DOC. 1210310060	YES	NOT PLOTTABLE

GENERAL NOTES

COMPARE THIS PLAT, LEGAL DESCRIPTION AND ALL SURVEY POINTS AND MONUMENTS BEFORE ANY CONSTRUCTION, AND IMMEDIATELY REPORT ANY DISCREPANCIES TO SURVEYOR.

DO NOT SCALE DIMENSIONS FROM THIS PLAT.

THE LOCATION OF THE PROPERTY LINES SHOWN ON THE FACE OF THIS PLAT ARE BASED UPON THE DESCRIPTION AND INFORMATION FURNISHED BY THE CLIENT, TOGETHER WITH THE TITLE COMMITMENT. THE PARCEL WHICH IS DEFINED MAY NOT REFLECT ACTUAL OWNERSHIP, BUT REFLECTS WHAT WAS SURVEYED. FOR OWNERSHIP, CONSULT YOUR TITLE COMPANY.

A TRACT SEARCH BY FIRST AMERICAN TITLE INSURANCE COMPANY FILE NO. 2633558 DATED APRIL 02, 2015 FOR LOTS 10, 11, 12 AND LOTS 24 TO 27 AND A TITLE COMMITMENT BY FIRST AMERICAN TITLE INSURANCE COMPANY FILE NO. 2633537 DATED MARCH 13, 2015 FOR LOTS 13 TO 23 WERE PROVIDED FOR SURVEYORS USE AT THE TIME OF PREPARATION OF THIS SURVEY.

MANHOLES, INLETS AND OTHER UTILITY RIMS OR GRATES SHOWN HEREON ARE FROM FIELD LOCATION OF SUCH, AND ONLY REPRESENT SUCH UTILITY IMPROVEMENTS WHICH ARE VISIBLE FROM ABOVE GROUND AT TIME OF SURVEY, THROUGH A NORMAL SEARCH AND WALK THROUGH OF THE SITE. THE LABELING OF THESE MANHOLES (SANITARY, WATER, ETC.) IS BASED SOLELY ON THE "STAMPED" MARKINGS OF THE RIM. NO UNDERGROUND OBSERVATIONS HAVE BEEN MADE TO VERIFY THE ACTUAL USE OR EXISTENCE OF UNDERGROUND UTILITIES.

THIS SURVEY MAY NOT REFLECT ALL UTILITIES OR IMPROVEMENTS IF SUCH ITEMS ARE HIDDEN BY LANDSCAPING OR ARE COVERED BY SUCH ITEMS AS DUMPSTERS, TRAILERS, CARS, DIRT, PAVING OR SNOW. AT THE TIME OF THIS SURVEY, SNOW DID NOT COVER THE SITE. LAWN SPRINKLER SYSTEMS, IF ANY, ARE NOT SHOWN ON THIS SURVEY.

OTHER THAN VISIBLE OBSERVATIONS NOTED HEREON, THIS SURVEY MAKES NO STATEMENT REGARDING THE ACTUAL PRESENCE OR ABSENCE OF ANY SERVICE.

CALL J.U.L.I.E. AT 1-800-892-0123 FOR FIELD LOCATION OF UNDERGROUND UTILITIES PRIOR TO ANY DIGGING OR CONSTRUCTION.

PUBLIC AND/OR PRIVATE RECORDS HAVE NOT BEEN SEARCHED TO PROVIDE ADDITIONAL INFORMATION. OVERHEAD WIRES AND POLES (IF ANY EXIST) ARE SHOWN HEREON, HOWEVER THEIR FUNCTION AND DIMENSIONS HAVE NOT BEEN SHOWN.

WE WERE TOLD THAT THE RECORDED PLAT OF SUBDIVISION DOES NOT EXIST - DUE TO THE FIRE.

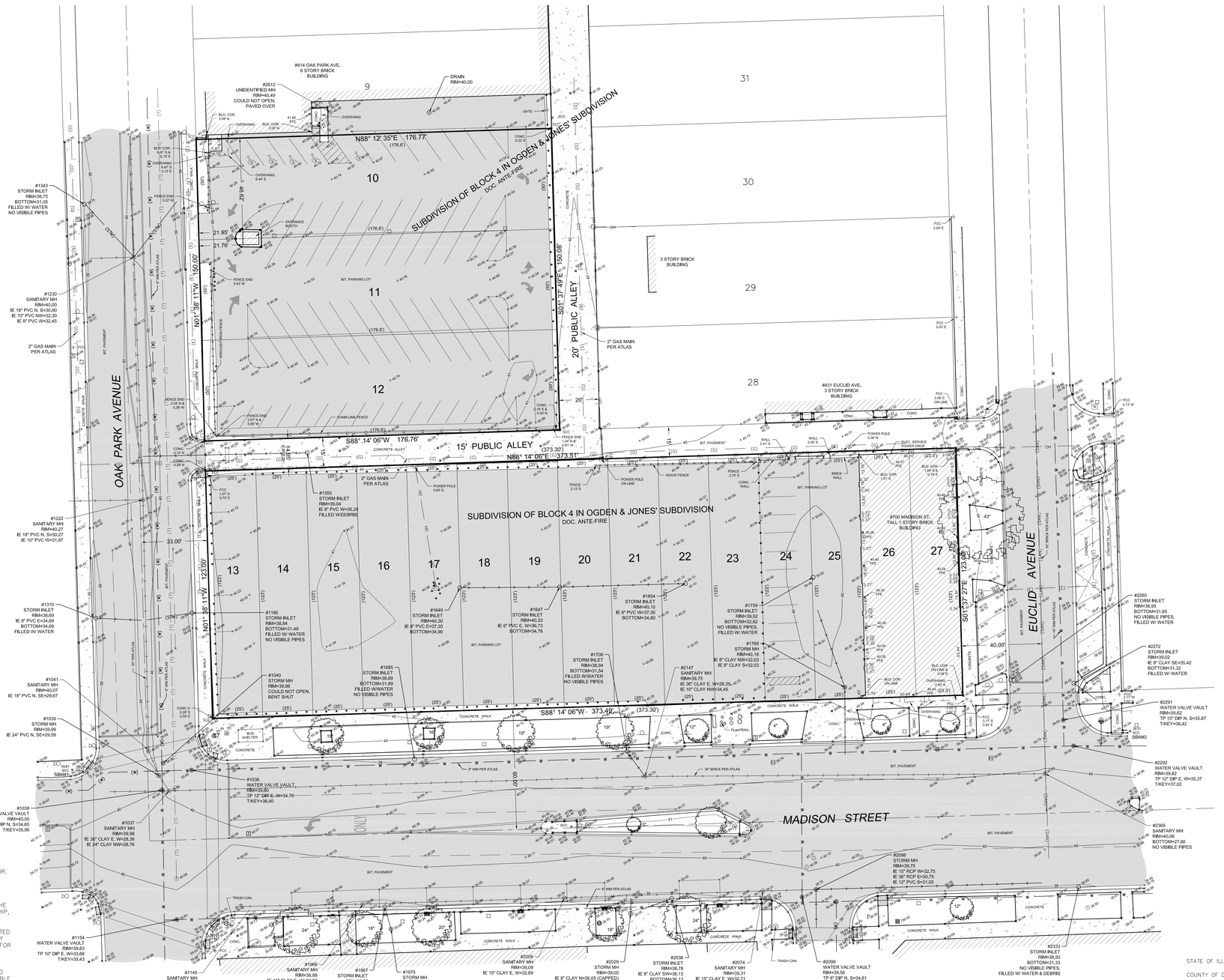

GRAPHIC SCALE

1" = 20'

BASIS OF BEARINGS

THE BASIS OF BEARINGS IS THE STATE PLANE COORDINATE SYSTEM (SPCS) NAD 83 (2007) ZONE 1201 (ILLINOIS EAST) WITH PROJECT ORIGIN AT LATITUDE 41-52-47.50865 N LONGITUDE 87-47-39.76949 W GROUND SCALE FACTOR 1.0000245949 ALL MEASUREMENTS ARE ON THE GROUND.

AREA

72462 SQ. FT.
1.6635 ACRES

LEGEND

CABLE TV PEDESTAL
TRAFFIC LIGHT POLE
TRAFFIC CONTROL BOX
TRAFFIC CONTROL VAULT
TRAFFIC LIGHT
TELEPHONE PEDESTAL
TELEPHONE MANHOLE
PAINTED TELEPHONE LINE
FIBER OPTIC CABLE LINE
ANCHOR
GUY POLE
UTILITY POLE
POWER POLE
LIGHT STANDARD
ELECTRIC MANHOLE
ELECTRIC PEDESTAL
ELECTRIC TRANSFORMER PAD
ELECTRIC METER
HANDHOLE
ELECTRICAL JUNCTION BOX
ELECTRIC VAULT
ELECTRIC SERVICE OUTLET BOX
PAINTED ELECTRIC LINE
TRANSFORMER PAD
SECTION CORNER
PAINTED GAS LINE
GAS VALVE
GAS METER
GAS VALVE VAULT
GAS METER
PIPELINE MARKER
MONITORING WELL
POST INDICATOR VALVE
WELL HEAD
FLAGPOLE
MAILBOX
SIGN
POST
PUBLIC PAY TELEPHONE
PARKING METER
WETLAND MARKER
BASKETBALL HOOP
AIR CONDITIONER PAD/UNIT
DECIDUOUS TREE W/ TRUNK SIZE
NON-DECIDUOUS TREE W/ TRUNK SIZE
BUSH
SOIL BORING HOLE W/ NUMBER
QUARTER SECTION CORNER
HEADWALL
CURB INLET
STORM INLET
STORM MANHOLE
FLARED END SECTION
CLEANOUT
SANITARY MANHOLE
HOSE BIB
B-BOX
HYDRANT
WATER VALVE
WATER VALVE VAULT
PAINTED WATER LINE
SPRINKLER HEAD
WATER METER
FOUND DISK IN CONCRETE
FOUND BRASS DISC
FOUND ROW MARKER
FOUND IRON ROD
FOUND RAILROAD SPIKE
FOUND PK NAIL
FOUND MAG NAIL
FOUND CUT CROSS
FOUND IRON PIPE
FOUND IRON BAR
SET TRAVERSE POINT
SET PK NAIL
SET MAG NAIL
SET IRON PIPE
SET CONCRETE MONUMENT WITH BRASS DISC
SET CONCRETE MONUMENT WITH IRON PIPE

PROPERTY LINE
EXISTING RIGHT-OF-WAY LINE
PROPOSED RIGHT-OF-WAY LINE
EXISTING LOT LINE
PROPOSED LOT LINE
EX. & PRO. CENTERLINE
EXISTING EASEMENT LINE
PROPOSED EASEMENT LINE
EX. & PRO. BUILDING SETBACK LINE
SECTION LINE
EXISTING FENCELINE (CHAIN LINK)
EXISTING FENCELINE (WOOD)
EXISTING FENCELINE (WIRE)
GUARDRAIL
RAILROAD TRACKS
UNDERGROUND CABLE TV
UNDERGROUND CABLE TV(ATLAS INFO.)
UNDERGROUND FIBER OPTIC CABLE(ATLAS)
UNDERGROUND ELECTRIC
UNDERGROUND ELECTRIC(ATLAS INFO.)
UNDERGROUND TELEPHONE
UNDERGROUND TELEPHONE(ATLAS INFO.)
GAS MAIN
GAS MAIN(ATLAS INFO.)
WATER MAIN
WATER MAIN (ATLAS INFO.)
SANITARY SEWER
SANITARY SEWER(ATLAS INFO.)
STORM SEWER
STORM SEWER(ATLAS INFO.)
EDGE OF WATER
OVERHEAD WIRES
CURB
DEPRESSED CURB
EXISTING CONTOUR LINE
ASPHALT PAVING OR WATER (LABELED)
UNPAVED ROAD
CONCRETE
METALRAIL
EXISTING BUILDING
MARSH AREA

ABBREVIATIONS

782.62	EXISTING TOP OF CURB ELEVATION
782.12	EXISTING EDGE OF PAVEMENT ELEVATION
x 782.37	EXISTING SPOT ELEVATION
A.P.	ACCESSIBLE PARKING
F.F.	FINISHED FLOOR
F.G.	TOP OF FOUNDATION
CMP	CORRUGATED METAL PIPE
RCP	REINFORCED CONCRETE PIPE
VCP	VITRIFIED CLAY PIPE
FRM.	FRAME
BRK.	BRICK
TC	TOP OF CURB
BC	BOTTOM OF CURB
GUT.	GUTTER
EP	EDGE OF PAVEMENT
F.L.	FLOW LINE
CONC.	CONCRETE
CLR.	CLEARANCE
MH	MANHOLE
CW	CONCRETE WALK
TW	TOP OF WALL
BW	BOTTOM OF WALL
FW	FACE OF WALL
BW	BACK OF WALK
FES	FLARED END SECTION
INV.	INVERT
DIP	DUCTILE IRON PIPE
SD	STORM DRAIN
SAN.	SANITARY SEWER
N	NORTH
S	SOUTH
E	EAST
W	WEST
OB	CHORD BEARING
CH	CHORD LENGTH
R	RADIUS
U.E.	UTILITY EASEMENT
P.U.E.	PUBLIC UTILITY EASEMENT
D.E.	DRAINAGE EASEMENT
M.U.E.	MUNICIPAL UTILITY EASEMENT
I.E.	INGRESS & EGRESS EASEMENT
P.C.	POINT OF CURVATURE
PCC	POINT OF COMPOUND CURVATURE
PRC	POINT OF REVERSE CURVATURE
PT	POINT OF TANGENCY
(REC)	RECORD DATUM
MEAS.	MEASURED DATUM
(CALC)	CALCULATED DATUM
(DED)	DATUM AS TAKEN FROM DEED
ETBE	EXCEPTION TO BLANKET EASEMENT

SURVEYOR'S CERTIFICATE

STATE OF ILLINOIS)
)SS
COUNTY OF DUPAGE)

THIS IS TO CERTIFY THAT THIS MAP OR PLAT AND THE SURVEY ON WHICH IT IS BASED WERE MADE IN ACCORDANCE WITH THE "2011 MINIMUM STANDARD DETAIL REQUIREMENTS FOR ALTA/ACSM LAND TITLE SURVEYS," JOINTLY ESTABLISHED AND ADOPTED BY ALTA AND NSPS, AND INCLUDES ITEMS 1, 2, 4, 5, 7(A), 8, 11(B), AND 21 OF TABLE A THEREOF.

THE FIELD WORK WAS COMPLETED ON MARCH 30, 2015.

DATE OF PLAT OR MAP: APRIL 6TH, 2015.

CHRISTOPHER D. BARTOSZ
ILLINOIS PROFESSIONAL LAND SURVEYOR NO. 35-3189
MY LICENSE EXPIRES ON NOVEMBER 30, 2016.
V3 COMPANIES OF ILLINOIS, LTD. PROFESSIONAL DESIGN FIRM NO. 184000902
THIS DESIGN FIRM NUMBER EXPIRES APRIL 30, 2015.

CHRISTOPHER D. BARTOSZ
35189
PROFESSIONAL LAND SURVEYOR
STATE OF ILLINOIS
WOODRIDGE, ILLINOIS

THIS PROFESSIONAL SERVICE CONFORMS TO THE CURRENT ILLINOIS MINIMUM STANDARDS FOR BOUNDARY SURVEYS.
cdbartosz@v3co.com

ALTA/ACSM LAND TITLE SURVEY		Project No: 15057	
NE COR. OF OAK PARK AVE. & MADISON ST		Group No: VP01.1	
DRAFTING COMPLETED: 04-03-15	DRAWN BY: SPK	PROJECT MANAGER: CDB	SHEET NO. 1 of 1
FIELD WORK COMPLETED: 03-30-15	CHECKED BY: CDB	SCALE: 1" = 20'	

NO.	DATE	DESCRIPTION

REVISIONS

NO.	DATE	DESCRIPTION

PREPARED FOR:
Village of Oak Park
201 South Boulevard
Oak Park, IL 60302-4272
708-358-5726

Engineers Scientists Surveyors
7325 Janes Avenue, Suite 100
Woodridge, IL 60517
630.724.9200 voice
630.724.0384 fax
v3co.com

Reference 2

Phase I Executive Summary

Phase I Environmental Site Assessment: Will be provided with the addendum (accessed via drop-box)

ADDENDUM NO. 1

September 6, 2018

PROJECT NO. RFP 18-11: 700 Madison St. Building Demolition

VILLAGE OF OAK PARK

PUBLIC WORKS CENTER

201 SOUTH BLVD

COOK COUNTY, ILLINOIS

PROPOSAL DUE DATE: September 13, 2018

This addendum forms a part of the Contract Documents and amends the original documents and the Plans and Special Provisions. Where any part of the contract documents is amended, the unaltered provisions are to remain in effect.
This is the only notice you receive, with no follow up by mail. Please CONFIRM receipt of this addendum by phone, fax or email.

1. ***Attached is Reference 3 Asbestos-Containing Material Summary Report ACM Appendices (Has been uploaded to drop box https://www.dropbox.com/sh/ltvs75asfls4dc3/AAAwR8W13_gqduhfJooc29-ta?dl=0)***

Arry Lazaridis
Engineer Technician
Village of Oak Park
201 South Blvd
Oak Park, IL 60302
708.358.5726
alazaridis@oak-park.us

Reference 3

Asbestos-Containing Material summary report ACM appendices: Will be provided with the addendum (accessed via drop-box)

Asbestos Survey Report

Former CarX Auto Service

700 Madison Street

Oak Park, Cook County, Illinois 60302

September 6, 2018

Terracon Project No. 11187250

Prepared for:

Village of Oak Park
Oak Park, Illinois

Prepared by:

Terracon Consultants, Inc.
Glendale Heights, Illinois

terracon.com

Terracon

Environmental ■ Facilities ■ Geotechnical ■ Materials

Terracon

September 6, 2018

Mr. Bill McKenna, P.E., Village Engineer
Village of Oak Park
201 South Blvd
Oak Park, Illinois 60302

Phone: 708-358-5722
Email: mckenna@oak-park.us

Re: Asbestos Survey
Former CarX Auto Service
700 Madison Street
Oak Park, Cook County, Illinois 60302
Terracon Project No. 11187250

Dear Mr. McKenna:

The purpose of this report is to present the results of the asbestos survey conducted by Terracon Consultants, Inc. (Terracon) on August 27, 2018 of the approximately 5,929-square foot commercial property structure, formerly occupied by CarX Auto Service, located at 700 Madison Street, Oak Park, Illinois. This survey was conducted in general accordance with Terracon's Proposal Number P11187250 dated August 20, 2018. We understand the Village of Oak Park is requesting the asbestos survey as part of the planned demolition of the property.

Based on sampling and analysis performed for this survey, the presence of ACM (asbestos in concentrations of more than one percent {1%}) was identified in the structure. Please refer to the attached report for details.

Terracon appreciates the opportunity to provide this service to the Village of Oak Park. If you have any questions regarding this report, please contact our office at 630-717-4263.

Sincerely,
Terracon Consultants, Inc.

FOR
Heather E. Eckard
Senior Staff Industrial Hygienist

Brendan J. Quealy
Senior Associate
Department Manager - IH/Asbestos Services

TABLE OF CONTENTS

Page

1.0 INTRODUCTION 1

1.1 Project Objective 1

2.0 BUILDING DESCRIPTION 1

3.0 FIELD ACTIVITIES 2

3.1 Visual Assessment 2
3.2 Physical Assessment 2
3.3 Sample Collection 2
3.4 Sample Analysis 3

4.0 REGULATORY OVERVIEW 3

5.0 FINDINGS AND RECOMMENDATIONS 4

6.0 GENERAL COMMENTS 6

APPENDICES:

Appendix A Asbestos Survey Sample Summary
Appendix B Confirmed ACM Summary
Appendix C Asbestos Analytical Laboratory Data
Appendix D Licenses and Certifications
Appendix E Site Photographs

ASBESTOS SURVEY REPORT

Former CarX Auto Service
700 Madison Street
Oak Park, Cook County, Illinois 60302

Terracon Project No. 11187250
September 6, 2018

1.0 INTRODUCTION

Terracon Consultants, Inc. (Terracon) conducted an asbestos survey of the approximately 5,929 square feet (SF) one-story building located at 700 Madison Street, Oak Park, Illinois formerly occupied by CarX Auto service and now vacant. The interior and exterior survey was conducted on August 27, 2018 by a State of Illinois Department of Public Health (IDPH) licensed building inspector in general accordance with Terracon's Proposal Number P11187250 dated August 20, 2018. Visible and accessible interior and exterior components were surveyed and homogeneous areas of suspect asbestos-containing materials (ACM) were visually identified and documented. Although reasonable effort was made to survey accessible suspect materials, additional suspect but unsampled materials could be located in walls, in voids or in other concealed areas.

Suspect ACM samples were collected in general accordance with the sampling protocols outlined in United States Environmental Protection Agency (USEPA) 40 Code of Federal Regulations (CFR) 763. Samples were delivered to an accredited laboratory for analysis by polarized light microscopy (PLM). In addition, select floor tile samples were further analyzed by transmission electron microscopy (TEM) based on the PLM results as recommended by the USEPA.

1.1 Project Objective

Terracon understands this asbestos survey was requested due to the planned demolition of the building. USEPA regulation 40 CFR 61, Subpart M, National Emission Standards for Hazardous Air Pollutants (NESHAP), prohibits the release of asbestos fibers to the atmosphere during demolition or renovation activities. The asbestos NESHAP requires that potentially regulated ACM be identified, classified, and quantified prior to demolition or renovation activities.

2.0 BUILDING DESCRIPTION

The site is located at 700 Madison Street in Oak Park, Illinois. The site building consists of a vacant former CarX that is an approximately 5,929 SF brick slab-on-grade structure that is to be demolished. Interior walls of the building consist of masonry and gypsum wallboard. Floors are concrete finished with ceramic tile and vinyl floor tile. Ceilings are comprised of drop in ceiling tile systems with acoustical ceiling tiles or open to the wood ceiling deck. Suspect thermal system

insulation (TSI) on piping was not identified during the inspection. Roofing consist of a built-up roof in the center over a wood barrel-style deck.

3.0 FIELD ACTIVITIES

Heather Eckard conducted the survey on August 27, 2018. Ms. Eckard is an IDPH-licensed asbestos building inspector and a copy of her license and certification are attached in Appendix D. The ACM survey was conducted in general accordance with the sampling protocols outlined in USEPA 40 CFR 763.86. A summary of the survey activities follows.

3.1 Visual Assessment

Terracon's survey activities began with visual observation of the interior and exterior of the building, including the roof, to identify homogeneous areas and quantify materials suspected of containing asbestos (suspect ACM). A homogeneous area consists of materials that appear similar throughout in terms of color and texture. Homogeneous areas of suspect ACM were visually identified and documented. Although reasonable effort was made to survey accessible suspect materials, additional suspect, but unsampled, materials could be located in walls, voids or in other concealed areas. Materials identified as concrete, glass, wood, metal or rubber were not considered suspect ACM.

3.2 Physical Assessment

A physical assessment of each homogeneous area of suspect ACM was conducted to assess the friability and condition of the materials. A friable material is defined by the USEPA as a material that can be crumbled, pulverized or reduced to powder by hand pressure when dry. Friability was assessed by physically touching suspect materials.

3.3 Sample Collection

Based on the results of the visual assessment, bulk samples of visible and accessible suspect ACM were collected in general accordance with USEPA sampling protocols. Samples of suspect materials were collected in each homogeneous area. The bulk samples were collected using wet methods, as applicable, to reduce the potential for fiber release. Samples were placed in sealable containers and labeled with unique sample numbers.

Terracon collected 68 bulk samples from 22 homogeneous areas of suspect ACM during this survey. The homogeneous areas of suspect ACM identified and sampled during the survey are listed in Appendix A.

3.4 Sample Analysis

Bulk samples were submitted under chain of custody to Moody Labs (Moody) of Farmers Branch, Texas, a laboratory accredited under the National Voluntary Laboratory Accreditation Program (NVLAP) (Lab No. 102056-0), for analysis by PLM with dispersion staining techniques per USEPA's *Method for the Determination of Asbestos in Bulk Building Materials* (600/R-93-116). The percentage of asbestos, where applicable, was determined by microscopic visual estimation.

If PLM results of floor tile samples were reported with asbestos not detected or detected at trace level, one sample from each homogeneous area was re-analyzed using TEM after gravimetric reduction per USEPA's *Method for the Determination of Asbestos in Bulk Building Materials* (600/R-93-116).

Laboratory analytical reports are included in Appendix C. A copy of Moody's certifications are provided in Appendix D.

4.0 REGULATORY OVERVIEW

The asbestos NESHAP (40 CFR 61, Subpart M) regulates asbestos fiber emissions and asbestos waste disposal practices. It also requires the identification and classification of existing materials prior to demolition or renovation activity. Under NESHAP, ACM are classified as friable, Category I nonfriable or Category II nonfriable ACM. Friable materials are those that, when dry, may be crumbled, pulverized or reduced to powder by hand pressure. Category I nonfriable ACM includes packings, gaskets, resilient floor coverings and asphalt roofing products containing more than 1% asbestos. Category II nonfriable ACM are any materials other than Category I materials that contain more than 1% asbestos. Friable ACMs and Category I and Category II nonfriable ACMs that are in poor condition and have become friable; will be subjected to drilling, sanding, grinding, cutting or abrading; or could be crushed or pulverized during anticipated renovation or demolition activities are considered regulated ACM (RACM).

In Illinois, asbestos activities are regulated by the Illinois Environmental Protection Agency (IEPA) and IDPH. IEPA regulates asbestos fiber emissions under Illinois Administrative Code (IAC) 35 Part 228 Asbestos. For large projects (greater than 160 square feet and/or 260 linear feet) and demolition projects, the owner or operator must provide the IEPA with written notification and payment of applicable fees for removal activities at least 10 working days prior to the commencement of asbestos abatement activities.

IDPH regulates asbestos abatement activities in schools and other buildings under 77 IAC 855 Asbestos Abatement for Public and Private Schools and Commercial and Public Buildings in Illinois. Under 77 IAC 855.100 License Requirements, IDPH requires that any asbestos-related activity conducted in schools be performed by personnel licensed by the IDPH. This includes asbestos workers, supervisors, inspectors, management planners, project designers, project managers, air

sampling professionals, and contractors. 77 IAC 855 specifies work practices and controls for all schools.

The Cook County Department of Environmental Control (CCDEC) also regulates asbestos removal and disposal, renovation or demolition for compliance with asbestos/hazardous material regulations in suburban Cook County. Contractors/owners are required to obtain a permit from the CCDEC prior to asbestos removal or demolition. Notification and payment of applicable permit fees to the CCDEC at least ten working days in advance of performing asbestos abatement, as well as receipt of the applicable permit from CCDEC, is required prior to all demolition and renovation projects regardless of the quantity or NESHAP category of ACM to be removed.

The Occupational Safety and Health Administration (OSHA) Asbestos standard for the construction industry (29 CFR 1926.1101) regulates workplace exposure to asbestos during ACM removal. The OSHA standard requires that employee exposure to airborne asbestos fibers be maintained below the permissible exposure limits (PELs) of 0.1 asbestos fiber per cubic centimeter of air (0.1 f/cc) as an 8-hour time-weighted average (TWA) or 1.0 f/cc as a 30-minute excursion limit. The OSHA standard classifies the types of construction and maintenance activities that could disturb ACM, and specifies work practices and precautions that employers must follow when engaging in each class of regulated work.

5.0 FINDINGS AND RECOMMENDATIONS

Based on sampling and analysis performed for the survey, the presence of ACM (asbestos in concentrations of more than one percent {1%}) was identified in the building surveyed.

HA No.	Description	Material Location	Percent/Type Asbestos	NESHAP Classification	Condition	Estimated Quantity*
2	Roof flashing	Perimeter of roof and mechanical units	10% Chrysotile	Category I Non-Friable	Damaged	500 LF
3	Grey roof flashing (patch)	Skylight, HVAC units, northwest corner and south parapet wall	10% Chrysotile	Category I Non-Friable	Damaged	35 LF
5	Black sealant on vent pipes	Roof vent pipes	5% Chrysotile	Category I Non-Friable	Damaged	6 vent pipes
6	Grey/black skylight window glazing	Exterior roof skylight	5% Chrysotile	Category II Non-Friable	Damaged	350 LF
9	Black/grey exterior wall caulk	Front (south) brick wall	5% Chrysotile	Category II Non-Friable	Damaged	40 LF

HA No.	Description	Material Location	Percent/Type Asbestos	NESHAP Classification	Condition	Estimated Quantity*
17	12”x12” white floor tile and black mastic	Garage-small patch by southeast side *Part of checkerboard pattern	2.2% Chrysotile - Floor Tile (TEM) 5% Chrysotile - Mastic	Category I Non-Friable	Damaged	125 SF
18	12”x12” blue floor tile and black mastic	Garage-small patch by southeast side *Part of checkerboard pattern	2.8% Chrysotile - Floor Tile (TEM) 5% Chrysotile	Category I Non-Friable	Damaged	125 SF
20	Light grey exterior door caulk	Front entrance door	5% Chrysotile	Category II Non-Friable	Damaged	20 LF

*Estimated quantities are based on a cursory field evaluation, and actual quantities may vary.

HA = homogeneous area
SF = square feet
LF = linear feet
RACM = Includes friable ACM, category I nonfriable ACM that has become friable, Category I nonfriable ACM that will be or has been subjected to sanding, grinding, cutting, or abrading, or category II nonfriable ACM that has a high probability of becoming or has become crumbled, pulverized, or reduced to powder by the forces expected to act on the material in the course of demolition or renovation operations.
Category I: Includes asbestos-containing packings, gaskets, asphaltic roofing products, resilient flooring, pliable sealants and pliable mastics.
Category II: Includes asbestos-containing material, excluding Category I nonfriable ACM, that, when dry, cannot be crumbled, pulverized, or reduced to powder by hand pressure.

Based on the findings of the survey, Terracon recommends the following:

- Terracon recommends the identified ACM be removed and disposed by an IDPH-licensed asbestos abatement contractor prior to any activity that will disturb it in accordance with NESHAP and CCDEC regulations. Though not required by regulation, Terracon recommends that an IDPH-licensed asbestos professional represent the Owner on-site during abatement activities to insure that all project activities are conducted in accordance with the applicable rules and regulations.
- Following asbestos removal, final air clearance should be performed in accordance with applicable IDPH and CCDEC regulations for interior work areas.
- The possibility exists that additional suspect ACM is present that was not identified herein. Any suspect ACM not previously sampled or identified should be treated as assumed ACM until laboratory analysis confirms the presence or absence of asbestos.

6.0 GENERAL COMMENTS

This survey was conducted in a manner consistent with the level of care and skill ordinarily exercised by members of the profession currently practicing under similar conditions in the same locale. The results, findings, conclusions and recommendations expressed in this report are based on conditions observed during Terracon's survey of the building. Reasonable efforts to access suspect materials within known areas of restricted access (e.g., crawl spaces) were made; however, areas that posed a health or safety risk to Terracon personnel were not sampled. Sampling did not include suspect materials that could not be safely reached with available ladders. The selection of sample locations and frequency of sampling was based on Terracon's observations and the assumption that like materials in the same area are homogeneous in content. Concealed ACMs may exist in concealed areas not investigated or identified.

The information contained in this report is relevant to the dates on which this survey was performed, and should not be relied upon to represent conditions at a later date. This report has been prepared on behalf of and exclusively for use by the Village of Oak Park for specific application to their project as discussed. This report is not a bidding document. Contractors or consultants reviewing this report must draw their own conclusions regarding further investigation or remediation deemed necessary. Terracon does not warrant the work of regulatory agencies, laboratories or other third parties supplying information that may have been used in the preparation of this report. No warranty, express or implied is made.

APPENDIX A

ASBESTOS SURVEY SAMPLE SUMMARY
FORMER CARX AUTO SERVICE
700 MADISON STREET
OAK PARK, ILLINOIS

Terracon Project No. 11187250
September 6, 2018

SAMPLE NO.	MATERIAL DESCRIPTION	MATERIAL LOCATION	SAMPLE LOCATION	LAB RESULT
1-RF8-01	Built-up roof	Roof	Northwest side	Roof Membrane-ND[1] Roofing Tars-ND Roofing Felt 1-ND Roofing Felts 2-ND
1-RF8-02			Center	Roofing Membrane- ND Roofing Tars- ND Roofing Felts-ND
1-RF8-03			Southside center	Roofing Membrane- ND Roofing Tars- ND Roofing Felts-ND
2-RF4-04	**Roof flashing**	**Perimeter of roof and mechanical units**	**Westside center**	Roofing Tars- ND Roofing Felts 1-ND Roofing Felts 2-ND
2-RF4-05			**Eastside center**	Roof Membrane-ND Roofing Tar-ND Roofing Felt-ND
2-RF4-06			**North HVAC unit**	Roof Membrane-ND Roofing Tars-ND Roofing Felts-ND **Flashing Material-10% Chrysotile**
3-RF4-07	**Grey roof flashing (patch)**	**Skylight, HVAC units, northwest corner and south parapet wall**	**Northwest corner on skylight**	Flashing Patch-ND
3-RF4-08			**South-large HVAC unit**	Flashing Patch-ND
3-RF4-09			**South parapet wall**	Flashing Patch 1-ND **Flashing Patch 2- 10% Chrysotile**
4-PM3-10	Canvas duct tape	Roof south-large HVAC unit East-HVAC unit	South-Large HVAC Unit	Duct Tape-ND
4-PM3-11			South-Large HVAC Unit	Duct Tape-ND
4-PM3-12			East HVAC unit	Duct Tape-ND
5-RF7-13	**Black sealant on vent pipes**	**Roof vent pipes**	**Northwest vent**	**Sealant 5% Chrysotile** Sealant 2-ND
5-RF7-14			**North center vent**	Sealant-ND

[1] *ND = no asbestos detected*

APPENDIX A (continued)

SAMPLE NO.	MATERIAL DESCRIPTION	MATERIAL LOCATION	SAMPLE LOCATION	LAB RESULT
5-RF7-15			**South vent**	Sealant-ND
6-SC1-16	**Grey/black skylight window glazing (exterior)**	**Roof skylight**	**Skylight-westside center**	Window Glazing-ND **Sealant 5% Chrysotile** Sealant 2-ND
6-SC1-17			**Skylight-westside north**	Window Glazing-ND Sealant-ND
6-SC1-18			**Skylight-eastside north**	Window Glazing-ND Sealant-ND
7-SC1-19	White skylight window glazing	Roof skylight at the peak on both sides-possibly under HA-6	Skylight-Northside	Window Glazing-ND
7-SC1-20			Skylight-Northside	Window Glazing-ND
7-SC1-21			Skylight-Southside	Window Glazing-ND
8-RF-22	Grey roll shingle (patch)	Roof-northeast side	Roof-eastside-north	Roof Membrane-ND Roofing Tar-ND Roofing Felt-ND
8-RF3-23			Roof-eastside-center	Roof Membrane-ND Roofing Tar-ND Roofing Felt-ND
8-RF3-24			Roof-eastside-south	Roof Membrane-ND Roofing Tar-ND Roofing Felt-ND
9-CA3-25	**Black/grey exterior wall caulk**	**Front brick wall**	**South wall**	**Grey Caulking-5% Chrysotile** Black Caulking-ND
9-CA3-26			**South wall**	Caulking-ND
9-CA3-27			**South wall**	Caulking-ND
10-CA1-28	Exterior window/door caulk (clear)	Exterior windows-patching	Southwest window bay	Caulking-ND
10-CA1-29			South-windows	Caulking-ND
10-CA1-30			West-door	Caulking-ND
11-CT3-31	2'x2' hole/fissured ceiling tile	Front office, bathrooms, garage office and janitor's closet (JC)	Front office	Acoustic Tile-ND
11-CT3-32			Bathroom-west	Acoustic Tile-ND
11-CT3-33			Janitors Closet	Acoustic Tile-ND
12-CT3-34	2'x2' textured/ pinhole ceiling tile	Front office patch	Front office	Acoustic Tile-ND
12-CT3-35			Front office	Acoustic Tile-ND
12-CT3-36			Front office	Acoustic Tile-ND
13-WB1-37	Drywall/joint compound	Behind panels, offices, bathrooms, and JC	Bathroom-east	Drywall Material-ND Joint Compound-ND
13-WB1-38			Bathroom-west	Drywall Material-ND Joint Compound-ND
13-WB1-39			Janitors Closet	Drywall Material-ND Joint Compound-ND
14-FC6-40	Grey leveling compound	Garage-over ceramic floor tile (South side of garage)	Southwest side of garage	Leveling Compound-ND Mortar-ND
14-FC6-41			Southwest side of garage	Leveling Compound-ND Mortar-ND

APPENDIX A (continued)

SAMPLE NO.	MATERIAL DESCRIPTION	MATERIAL LOCATION	SAMPLE LOCATION	LAB RESULT
14-FC6-42			Southwest side of garage	Leveling Compound-ND Mortar-ND
15-MA3/MA4-43	Grout and mortar on 1" hexagonal ceramic floor tile	Garage, front office under HA-16, JC and Garage office	Garage	Grout/Mortar-ND
15- MA3/MA4-44			Garage office	Grout/Mortar-ND
15- MA3/MA4-45			Garage hallway	Grout/Mortar-ND
16- MA3/MA4-46	Grout and mortar on 8" tan ceramic floor tile	Front office, bathroom, and JC	Front office	Grout-ND Mortar-ND
16- MA3/MA4-47			Bathroom-west	Grout-ND Mortar-ND
16- MA3/MA4-48			Janitors closet	Grout-ND Mortar-ND
17-FT2-49	**12" x 12" white floor tile and black mastic**	**Garage-small patch by southeast side *Part of checkerboard pattern**	**SE side of garage**	Floor Tile-ND (PLM) **Floor Tile-2.2% Chrysotile (TEM)[T]** **Black Mastic-5% Chrysotile**
17- FT2-50			**SE side of garage**	Floor Tile-ND **Black Mastic-5% Chrysotile**
17- FT2-51			**SE side of garage**	Floor Tile-ND **Black Mastic-5% Chrysotile**
18- FT2-52	**12" x 12" blue floor tile and black mastic**	**Garage-small patch by southeast side *Part of checkerboard pattern**	**SE side of garage**	Floor Tile-ND **Floor Tile-2.8% Chrysotile (TEM)[T]** **Black Mastic-5%** Chrysotile
18- FT2-53			**SE side of garage**	Floor Tile-ND **Black Mastic-5% Chrysotile**
18-FT2-54			**SE side of garage**	Floor Tile-ND **Black Mastic-5% Chrysotile**
19-HP1-55	Plaster wall (exterior over brick)	West Exterior wall	West Wall-north	Plaster-ND
19-HP1-56			West wall-north	Plaster-ND
19-HP1-57			West wall-center	Plaster-ND
19-HP1-58			West wall-south	Plaster-ND
19-HP1-59			West wall-south	Plaster-ND
20-CA2-60	**Light grey exterior door caulk**	**Front entrance door**	**Front entrance door**	**Caulking-5% Chrysotile**
20-CA2-61			**Front entrance door**	**Caulking-5% Chrysotile**

[T] = *ACM by TEM analysis*

APPENDIX A (continued)

SAMPLE NO.	MATERIAL DESCRIPTION	MATERIAL LOCATION	SAMPLE LOCATION	LAB RESULT
20-CA2-62			**Front entrance door**	**Caulking-5% Chrysotile**
21-CA2-63	Dark grey exterior door caulk under HA20	Front entrance door	Front entrance door	Caulking-ND
21-CA2-64			Front entrance door	Caulking-ND
21-CA2-65			Front entrance door	Caulking-ND
22-CA1-66	White/grey exterior window caulk	Front (2 small windows)	Front entrance small window-west	Caulking-ND
22-CA1-67			Front entrance small window-west	Caulking-ND
22-CA1-68			Front entrance small window-east	Caulking-ND

APPENDIX B
CONFIRMED ASBESTOS-CONTAINING MATERIALS
FORMER CARX AUTO SERVICE
700 MADISON STREET
OAK PARK, ILLINOIS

Terracon Project No. 11187250
September 6, 2018

HA No.	Description	Material Location	Percent/Type Asbestos	NESHAP Classification	Condition	Estimated Quantity*
2	Roof flashing	Perimeter of roof and mechanical units	10% Chrysotile	Category I Non-Friable	Damaged	500 LF
3	Grey roof flashing (patch)	Skylight, HVAC units, northwest corner and south parapet wall	10% Chrysotile	Category I Non-Friable	Damaged	35 LF
5	Black sealant on vent pipes	Roof vent pipes	5% Chrysotile	Category I Non-Friable	Damaged	6 vent pipes
6	Grey/black skylight window glazing	Exterior roof skylight	5% Chrysotile	Category II Non-Friable	Damaged	350 LF
9	Black/grey exterior wall caulk	Front (south) brick wall	5% Chrysotile	Category II Non-Friable	Damaged	40 LF
17	12”x12” white floor tile and black mastic	Garage-small patch by southeast side *Part of checkerboard pattern	2.2% Chrysotile - Floor Tile (TEM) 5% Chrysotile - Mastic	Category I Non-Friable	Damaged	125 SF
18	12”x12” blue floor tile and black mastic	Garage-small patch by southeast side *Part of checkerboard pattern	2.8% Chrysotile - Floor Tile (TEM) 5% Chrysotile	Category I Non-Friable	Damaged	125 SF
20	Light grey exterior door caulk	Front entrance door	5% Chrysotile	Category II Non-Friable	Damaged	20 LF

*Estimated quantities are based on a cursory field evaluation, and actual quantities may vary.

HA = homogeneous area
SF = square feet
LF = linear feet
RACM = Includes friable ACM, category I nonfriable ACM that has become friable, Category I nonfriable ACM that will be or has been subjected to sanding, grinding, cutting, or abrading, or category II nonfriable ACM that has a high probability

of becoming or has become crumbled, pulverized, or reduced to powder by the forces expected to act on the material in the course of demolition or renovation operations.

Category I: Includes asbestos-containing packings, gaskets, asphaltic roofing products, resilient flooring, pliable sealants and pliable mastics.

Category II: Includes asbestos-containing material, excluding Category I nonfriable ACM, that, when dry, cannot be crumbled, pulverized, or reduced to powder by hand pressure.

APPENDIX C

ASBESTOS ANALYTICAL LABORATORY DATA

PLM Summary Report

2051 Valley View Lane
Farmers Branch, TX 75234 Phone: (972) 241-8460

NVLAP Lab Code 102056-0
TDSHS License No. 30-0084

Client :	Terracon - Naperville	Lab Job No. :	18B-11107
Project :	Village of Oak Park, 700 Madison Street, Oak Park, IL	Report Date :	08/31/2018
Project # :	11187250	Sample Date :	08/27/2018
Identification :	Asbestos, Bulk Sample Analysis		
Test Method :	Polarized Light Microscopy / Dispersion Staining (PLM/DS) EPA Method 600 / R-93 / 116		

On 8/28/2018, sixty eight (68) bulk material samples were submitted by Heather Eckard of Terracon - Naperville for asbestos analysis by PLM/DS. The PLM Detail Report is attached; additional information may be found therein. The results are summarized below:

Sample Number	Client Sample Description / Location	Asbestos Content
1-RF8-01	Roof Field Built-Up Roof, Northwest Side	None Detected - Roof Membrane None Detected - Roofing Tars None Detected - Roofing Felts 1 None Detected - Roofing Felts 2
1-RF8-02	Roof Field Built-Up Roof, Center	None Detected - Roof Membrane None Detected - Roofing Tars None Detected - Roofing Felts
1-RF8-03	Roof Field Built-Up Roof, South Side Center	None Detected - Roof Membrane None Detected - Roofing Tars None Detected - Roofing Felts
2-RF4-04	Roof Flashing, West Side Center	None Detected - Roofing Tars None Detected - Roofing Felts 1 None Detected - Roofing Felts 2
2-RF4-05	Roof Flashing, East Side South	None Detected - Roof Membrane None Detected - Roofing Tar None Detected - Roofing Felt
2-RF4-06	Roof Flashing, North HVAC Unit	None Detected - Roof Membrane None Detected - Roofing Tars None Detected - Roofing Felts 10% Chrysotile - Flashing Material
3-RF4-07	Flashing Patch (Grey), Northwest Corner on Skylight	None Detected - Flashing Patch
3-RF4-08	Flashing Patch (Grey), South Large HVAC Unit	None Detected - Flashing Patch
3-RF4-09	Flashing Patch (Grey), South Parapet Wall	None Detected - Flashing Patch 1 10% Chrysotile - Flashing Patch 2
4-PM3-10	Canvas Duct Tape, South Large HVAC Unit	None Detected - Duct Tape
4-PM3-11	Canvas Duct Tape, South Large HVAC Unit	None Detected - Duct Tape
4-PM3-12	Canvas Duct Tape, East HVAC Unit	None Detected - Duct Tape
5-RF7-13	Sealant (Black) on Vent Pipes, Northwest Vent	5% Chrysotile - Sealant 1 None Detected - Sealant 2

PLM Summary Report

2051 Valley View Lane
Farmers Branch, TX 75234 Phone: (972) 241-8460

NVLAP Lab Code 102056-0
TDSHS License No. 30-0084

Client :	Terracon - Naperville	Lab Job No. :	18B-11107
Project :	Village of Oak Park, 700 Madison Street, Oak Park, IL	Report Date :	08/31/2018
Project # :	11187250	Sample Date :	08/27/2018
Identification :	Asbestos, Bulk Sample Analysis		
Test Method :	Polarized Light Microscopy / Dispersion Staining (PLM/DS) EPA Method 600 / R-93 / 116		

On 8/28/2018, sixty eight (68) bulk material samples were submitted by Heather Eckard of Terracon - Naperville for asbestos analysis by PLM/DS. The PLM Detail Report is attached; additional information may be found therein. The results are summarized below:

Sample Number	Client Sample Description / Location	Asbestos Content
5-RF7-14	Sealant (Black) on Vent Pipes, North Center Vent	None Detected - Sealant
5-RF7-15	Sealant (Black) on Vent Pipes, South Vent	None Detected - Sealant
6-SC1-16	Skylight Window Glazing (Grey / Black, Exterior), Skylight, West Side Center	None Detected - Window Glazing 5% Chrysotile - Sealant 1 None Detected - Sealant 2
6-SC1-17	Skylight Window Glazing (Grey / Black, Exterior), Skylight, West Side North	None Detected - Window Glazing None Detected - Sealant
6-SC1-18	Skylight Window Glazing (Grey / Black, Exterior), Skylight, East Side North	None Detected - Window Glazing None Detected - Sealant
7-SC1-19	Skylight Window Glazing (White, Exterior), Skylight, North Side	None Detected - Window Glazing
7-SC1-20	Skylight Window Glazing (White, Exterior), Skylight, North Side	None Detected - Window Glazing
7-SC1-21	Skylight Window Glazing (White, Exterior), Skylight, South Side	None Detected - Window Glazing
8-RF3-22	Roll Shingle Patch (Grey), Roof, East Side, North	None Detected - Roof Membrane None Detected - Roofing Tar None Detected - Roofing Felt
8-RF3-23	Roll Shingle Patch (Grey), Roof, East Side, Center	None Detected - Roof Membrane None Detected - Roofing Tar None Detected - Roofing Felt
8-RF3-24	Roll Shingle Patch (Grey), Roof, East Side, South	None Detected - Roof Membrane None Detected - Roofing Tar None Detected - Roofing Felt
9-CA3-25	Exterior Wall Caulk (Black / Grey), South Wall	5% Chrysotile - Grey Caulking None Detected - Black Caulking
9-CA3-26	Exterior Wall Caulk (Black / Grey), South Wall	None Detected - Caulking
9-CA3-27	Exterior Wall Caulk (Black / Grey), South Wall	None Detected - Caulking

PLM Summary Report

2051 Valley View Lane
Farmers Branch, TX 75234 Phone: (972) 241-8460

NVLAP Lab Code 102056-0
TDSHS License No. 30-0084

Client :	Terracon - Naperville	Lab Job No. :	18B-11107
Project :	Village of Oak Park, 700 Madison Street, Oak Park, IL	Report Date :	08/31/2018
Project # :	11187250	Sample Date :	08/27/2018
Identification :	Asbestos, Bulk Sample Analysis		
Test Method :	Polarized Light Microscopy / Dispersion Staining (PLM/DS) EPA Method 600 / R-93 / 116		

On 8/28/2018, sixty eight (68) bulk material samples were submitted by Heather Eckard of Terracon - Naperville for asbestos analysis by PLM/DS. The PLM Detail Report is attached; additional information may be found therein. The results are summarized below:

Sample Number	Client Sample Description / Location	Asbestos Content
10-CA1-28	Exterior Window / Door Caulk (Clear), Southwest Window Bay	None Detected - Caulking
10-CA1-29	Exterior Window / Door Caulk (Clear), South Windows	None Detected - Caulking
10-CA1-30	Exterior Window / Door Caulk (Clear), West Door	None Detected - Caulking
11-CT3-31	2' x 2' Ceiling Tile (Hole / Fissure), Front Office	None Detected - Acoustic Tile
11-CT3-32	2' x 2' Ceiling Tile (Hole / Fissure), Bathroom West	None Detected - Acoustic Tile
11-CT3-33	2' x 2' Ceiling Tile (Hole / Fissure), Janitors Closet	None Detected - Acoustic Tile
12-CT3-34	2 x 2 Ceiling Tile (Textured / Pinhole), Front Office	None Detected - Acoustic Tile
12-CT3-35	2 x 2 Ceiling Tile (Textured / Pinhole), Front Office	None Detected - Acoustic Tile
12-CT3-36	2 x 2 Ceiling Tile (Textured / Pinhole), Front Office	None Detected - Acoustic Tile
13-WB1-37	Drywall / Joint Compound, Bathroom, East	None Detected - Drywall Material None Detected - Joint Compound
13-WB1-38	Drywall / Joint Compound, Bathroom, West	None Detected - Drywall Material None Detected - Joint Compound
13-WB1-39	Drywall / Joint Compound, Janitors Closet	None Detected - Drywall Material None Detected - Joint Compound
14-FC6-40	Leveling Compound (Grey), Southwest Side of Garage	None Detected - Leveling Compound None Detected - Mortar
14-FC6-41	Leveling Compound (Grey), Southwest Side of Garage	None Detected - Leveling Compound None Detected - Mortar
14-FC6-42	Leveling Compound (Grey), Southwest Side of Garage	None Detected - Leveling Compound None Detected - Mortar
15-MA3/MA4-43	Grout and Mortar on 1" Ceramic Floor Tile (Hexagon), Garage	None Detected - Grout / Mortar
15-MA3/MA4-44	Grout and Mortar on 1" Ceramic Floor Tile (Hexagon), Garage Office	None Detected - Grout / Mortar

PLM Summary Report

2051 Valley View Lane
Farmers Branch, TX 75234 Phone: (972) 241-8460

NVLAP Lab Code 102056-0
TDSHS License No. 30-0084

Client :	Terracon - Naperville	Lab Job No. :	18B-11107
Project :	Village of Oak Park, 700 Madison Street, Oak Park, IL	Report Date :	08/31/2018
Project # :	11187250	Sample Date :	08/27/2018
Identification :	Asbestos, Bulk Sample Analysis		
Test Method :	Polarized Light Microscopy / Dispersion Staining (PLM/DS) EPA Method 600 / R-93 / 116		

On 8/28/2018, sixty eight (68) bulk material samples were submitted by Heather Eckard of Terracon - Naperville for asbestos analysis by PLM/DS. The PLM Detail Report is attached; additional information may be found therein. The results are summarized below:

Sample Number	Client Sample Description / Location	Asbestos Content
15-MA3/MA4-45	Grout and Mortar on 1" Ceramic Floor Tile (Hexagon), Garage Hallway	None Detected - Grout / Mortar
16-MA3/MA4-46	Grout and Mortar on 8" Ceramic Floor Tile (Tan), Front Office	None Detected - Grout None Detected - Mortar
16-MA3/MA4-47	Grout and Mortar on 8" Ceramic Floor Tile (Tan), Bathroom West	None Detected - Grout None Detected - Mortar
16-MA3/MA4-48	Grout and Mortar on 8" Ceramic Floor Tile (Tan), Janitors Closet	None Detected - Grout None Detected - Mortar
17-FT2-49	12" x 12" Floor Tile (White) and Mastic (Black), Southeast Side of Garage	None Detected - Floor Tile 5% Chrysotile - Black Mastic
17-FT2-50	12" x 12" Floor Tile (White) and Mastic (Black), Southeast Side of Garage	None Detected - Floor Tile 5% Chrysotile - Black Mastic
17-FT2-51	12" x 12" Floor Tile (White) and Mastic (Black), Southeast Side of Garage	None Detected - Floor Tile 5% Chrysotile - Black Mastic
18-FT2-52	12" x 12" Floor Tile (Blue) and Mastic (Black), Southeast Side of Garage	None Detected - Floor Tile 5% Chrysotile - Black Mastic
18-FT2-53	12" x 12" Floor Tile (Blue) and Mastic (Black), Southeast Side of Garage	None Detected - Floor Tile 5% Chrysotile - Black Mastic
18-FT2-54	12" x 12" Floor Tile (Blue) and Mastic (Black), Southeast Side of Garage	None Detected - Floor Tile 5% Chrysotile - Black Mastic
19-HP1-55	Plaster Wall (Exterior Oven Brick), West Wall, North	None Detected - Plaster
19-HP1-56	Plaster Wall (Exterior Oven Brick), West Wall, North	None Detected - Plaster
19-HP1-57	Plaster Wall (Exterior Oven Brick), West Wall, Center	None Detected - Plaster
19-HP1-58	Plaster Wall (Exterior Oven Brick), West Wall, South	None Detected - Plaster
19-HP1-59	Plaster Wall (Exterior Oven Brick), West Wall, South	None Detected - Plaster
20-CA2-60	Exterior Door Caulk (Light Grey), Front Entrance Door	5% Chrysotile - Caulking

PLM Summary Report

2051 Valley View Lane
Farmers Branch, TX 75234 Phone: (972) 241-8460

NVLAP Lab Code 102056-0
TDSHS License No. 30-0084

Client :	Terracon - Naperville	Lab Job No. :	18B-11107
Project :	Village of Oak Park, 700 Madison Street, Oak Park, IL	Report Date :	08/31/2018
Project # :	11187250	Sample Date :	08/27/2018
Identification :	Asbestos, Bulk Sample Analysis		
Test Method :	Polarized Light Microscopy / Dispersion Staining (PLM/DS) EPA Method 600 / R-93 / 116		

On 8/28/2018, sixty eight (68) bulk material samples were submitted by Heather Eckard of Terracon - Naperville for asbestos analysis by PLM/DS. The PLM Detail Report is attached; additional information may be found therein. The results are summarized below:

Sample Number	Client Sample Description / Location	Asbestos Content
20-CA2-61	Exterior Door Caulk (Light Grey), Front Entrance Door	5% Chrysotile - Caulking
20-CA2-62	Exterior Door Caulk (Light Grey), Front Entrance Door	5% Chrysotile - Caulking
21-CA2-63	Exterior Door Caulk (Dark Grey, Under HA20), Front Entrance Door	None Detected - Caulking
21-CA2-64	Exterior Door Caulk (Dark Grey, Under HA20), Front Entrance Door	None Detected - Caulking
21-CA2-65	Exterior Door Caulk (Dark Grey, Under HA20), Front Entrance Door	None Detected - Caulking
22-CA1-66	Exterior Window Caulk (White / Grey), Front Entrance Small Window West	None Detected - Caulking
22-CA1-67	Exterior Window Caulk (White / Grey), Front Entrance Small Window West	None Detected - Caulking
22-CA1-68	Exterior Window Caulk (White / Grey), Front Entrance Small Window East	None Detected - Caulking

These samples were analyzed by layers. Quantification, unless otherwise noted, is performed by calibrated visual estimate. The test report shall not be reproduced, except in full, without written approval of the laboratory. The results relate only to the items tested. These test results do not imply endorsement by NVLAP or any agency of the U.S. Government. Accredited by the National Voluntary Laboratory Accreditation Program for Bulk Asbestos Fiber Analysis under Lab Code 102056-0.

NVLAP® LAB #102056-0

Analyst(s): Melissa Garcia, Willie Pruitt

Lab Manager : Heather Lopez — Approved Signatory : Heather Lopez

Lab Director : Bruce Crabb — Approved Signatory : Bruce Crabb

Thank you for choosing Moody Labs

This Page Left Intentionally Blank

Moody Labs
2051 Valley View Lane
Farmers Branch, TX 75234 Phone: (972) 241-8460

PLM Detail Report

Supplement to PLM Summary Report

NVLAP Lab Code 102056-0
TDSHS License No. 30-0084

Client : Terracon - Naperville
Project : Village of Oak Park, 700 Madison Street, Oak Park, IL
Project # : 11187250

Lab Job No. : 18B-11107
Report Date : 08/31/2018

Sample Number	Layer	% Of Sample	Components	% of Layer	Analysis Date	Analyst
1-RF8-01	Roof Membrane (Black)	35%	Synthetic Fibers	10%	08/31	MG
			Calcite	30%		
			Tar Binders	60%		
	Roofing Tars (Black)	35%	Tar Binders	100%		
	Roofing Felts 1 (Black)	15%	Glass Wool Fibers	45%		
			Tar Binders	55%		
	Roofing Felts 2 (Black)	15%	Cellulose Fibers	85%		
			Calcite / Tar Binders	15%		
1-RF8-02	Roof Membrane (Black)	40%	Synthetic Fibers	10%	08/31	MG
			Calcite	30%		
			Tar Binders	60%		
	Roofing Tars (Black)	40%	Tar Binders	100%		
	Roofing Felts (Black)	20%	Glass Wool Fibers	45%		
			Tar Binders	55%		
1-RF8-03	Roof Membrane (Black)	40%	Synthetic Fibers	10%	08/31	MG
			Calcite	30%		
			Tar Binders	60%		
	Roofing Tars (Black)	40%	Tar Binders	100%		
	Roofing Felts (Black)	20%	Glass Wool Fibers	45%		
			Tar Binders	55%		
2-RF4-04	Roofing Tars (Black)	50%	Tar Binders	100%	08/31	MG
	Roofing Felts 1 (Black)	25%	Glass Wool Fibers	45%		
			Tar Binders	55%		
	Roofing Felts 2 (Black)	25%	Cellulose Fibers	85%		
			Tar Binders	15%		

Moody Labs
2051 Valley View Lane
Farmers Branch, TX 75234 Phone: (972) 241-8460

PLM Detail Report

Supplement to PLM Summary Report

NVLAP Lab Code 102056-0
TDSHS License No. 30-0084

Client : Terracon - Naperville
Project : Village of Oak Park, 700 Madison Street, Oak Park, IL
Project # : 11187250

Lab Job No. : 18B-11107
Report Date : 08/31/2018

Sample Number	Layer	% Of Sample	Components	% of Layer	Analysis Date	Analyst
2-RF4-05	Roof Membrane (Black)	55%	Synthetic Fibers	10%	08/31	MG
			Calcite	30%		
			Tar Binders	60%		
	Roofing Tar (Black)	30%	Tar Binders	100%		
	Roofing Felt (Black)	15%	Glass Wool Fibers	45%		
			Tar Binders	55%		
2-RF4-06	Roof Membrane (Black)	45%	Synthetic Fibers	10%	08/31	MG
			Calcite	30%		
			Tar Binders	60%		
	Roofing Tars (Black)	20%	Tar Binders	100%		
	Roofing Felts (Black)	10%	Glass Wool Fibers	45%		
			Tar Binders	55%		
	Flashing Material (Grey / Black)	25%	Chrysotile	10%		
			Tar Binders	90%		
3-RF4-07	Flashing Patch (Grey / Black)	100%	Cellulose Fibers	25%	08/31	MG
			Tar Binders	75%		
3-RF4-08	Flashing Patch (Grey / Black)	100%	Cellulose Fibers	25%	08/31	MG
			Tar Binders	75%		
3-RF4-09	Flashing Patch 1 (Grey / Black)	45%	Cellulose Fibers	25%	08/31	MG
			Tar Binders	75%		
	Flashing Patch 2 (Grey / Black)	55%	Chrysotile	10%		
			Tar Binders	90%		
4-PM3-10	Duct Tape (White)	100%	Cotton Fibers	25%	08/31	MG
			Vinyl Binders	50%		
			Glue Binders	25%		
4-PM3-11	Duct Tape (White)	100%	Cotton Fibers	25%	08/31	MG
			Vinyl Binders	50%		
			Glue Binders	25%		

Moody Labs
2051 Valley View Lane
Farmers Branch, TX 75234 Phone: (972) 241-8460

PLM Detail Report

Supplement to PLM Summary Report

NVLAP Lab Code 102056-0
TDSHS License No. 30-0084

Client : Terracon - Naperville
Project : Village of Oak Park, 700 Madison Street, Oak Park, IL
Project # : 11187250

Lab Job No. : 18B-11107
Report Date : 08/31/2018

Sample Number	Layer	% Of Sample	Components	% of Layer	Analysis Date	Analyst
4-PM3-12	Duct Tape (White)	100%	Cotton Fibers	25%	08/31	MG
			Vinyl Binders	50%		
			Glue Binders	25%		
5-RF7-13	Sealant 1 (Black)	50%	Chrysotile	5%	08/31	MG
			Calcite	30%		
			Tar Binders	65%		
	Sealant 2 (Black)	50%	Glass Wool Fibers	3%		
			Tar Binders	97%		
5-RF7-14	Sealant (Black)	100%	Glass Wool Fibers	3%	08/31	MG
			Tar Binders	97%		
5-RF7-15	Sealant (Black)	100%	Glass Wool Fibers	3%	08/31	MG
			Tar Binders	97%		
6-SC1-16	Window Glazing (White)	20%	Calcite	50%	08/31	MG
			Binders / Fillers	50%		
	Sealant 1 (Black)	1%	Chrysotile	5%		
			Calcite	30%		
			Tar Binders	65%		
	Sealant 2 (Black)	79%	Cellulose Fibers	25%		
			Calcite / Tar Binders	75%		
6-SC1-17	Window Glazing (Off-White)	20%	Calcite	50%	08/31	MG
			Binders / Fillers	50%		
	Sealant (Black)	80%	Cellulose Fibers	25%		
			Tar Binders	75%		
6-SC1-18	Window Glazing (Off-White)	20%	Calcite	50%	08/31	MG
			Binders / Fillers	50%		
	Sealant (Black)	80%	Cellulose Fibers	25%		
			Tar Binders	75%		
7-SC1-19	Window Glazing (White)	100%	Calcite	50%	08/31	MG
			Binders / Fillers	50%		

Moody Labs
2051 Valley View Lane
Farmers Branch, TX 75234 Phone: (972) 241-8460

PLM Detail Report

Supplement to PLM Summary Report

NVLAP Lab Code 102056-0
TDSHS License No. 30-0084

Client : Terracon - Naperville
Project : Village of Oak Park, 700 Madison Street, Oak Park, IL
Project # : 11187250

Lab Job No. : 18B-11107
Report Date : 08/31/2018

Sample Number	Layer	% Of Sample	Components	% of Layer	Analysis Date	Analyst
7-SC1-20	Window Glazing (White)	100%	Calcite	50%	08/31	MG
			Binders / Fillers	50%		
7-SC1-21	Window Glazing (White)	100%	Calcite	50%	08/31	MG
			Binders / Fillers	50%		
8-RF3-22	Aggregate (Grey)	15%	Aggregate	100%	08/31	MG
	Roof Membrane (Black)	37%	Synthetic Fibers	10%		
			Calcite	30%		
			Tar Binders	60%		
	Roofing Tar (Black)	33%	Tar Binders	100%		
	Roofing Felt (Black)	15%	Glass Wool Fibers	45%		
			Tar Binders	55%		
8-RF3-23	Aggregate (Grey)	15%	Aggregate	100%	08/31	MG
	Roof Membrane (Black)	37%	Synthetic Fibers	10%		
			Calcite	30%		
			Tar Binders	60%		
	Roofing Tar (Black)	33%	Tar Binders	100%		
	Roofing Felt (Black)	15%	Glass Wool Fibers	45%		
			Tar Binders	55%		
8-RF3-24	Aggregate (Grey)	15%	Aggregate	100%	08/31	MG
	Roof Membrane (Black)	37%	Synthetic Fibers	10%		
			Calcite	30%		
			Tar Binders	60%		
	Roofing Tar (Black)	33%	Tar Binders	100%		
	Roofing Felt (Black)	15%	Glass Wool Fibers	45%		
			Tar Binders	55%		
9-CA3-25	Grey Caulking (Grey)	10%	Chrysotile	5%	08/31	MG
			Wollastonite	5%		
			Pigment / Binders	90%		
	Black Caulking (Black)	90%	Binders / Fillers	100%		
9-CA3-26	Caulking (Black)	100%	Binders / Fillers	100%	08/31	MG

Moody Labs
2051 Valley View Lane
Farmers Branch, TX 75234 Phone: (972) 241-8460

PLM Detail Report

Supplement to PLM Summary Report

NVLAP Lab Code 102056-0
TDSHS License No. 30-0084

Client : Terracon - Naperville
Project : Village of Oak Park, 700 Madison Street, Oak Park, IL
Project # : 11187250

Lab Job No. : 18B-11107
Report Date : 08/31/2018

Sample Number	Layer	% Of Sample	Components	% of Layer	Analysis Date	Analyst
9-CA3-27	Caulking (Black)	100%	Binders / Fillers	100%	08/31	MG
10-CA1-28	Caulking (Clear)	100%	Binders / Fillers	100%	08/31	MG
10-CA1-29	Caulking (Clear)	100%	Binders / Fillers	100%	08/31	MG
10-CA1-30	Caulking (Clear)	100%	Binders / Fillers	100%	08/31	MG
11-CT3-31	Acoustic Tile (Light Grey)	100%	Cellulose Fibers	50%	08/31	MG
			Mineral Wool Fibers	30%		
			Perlite	20%		
11-CT3-32	Acoustic Tile (Light Grey)	100%	Cellulose Fibers	50%	08/31	MG
			Mineral Wool Fibers	30%		
			Perlite	20%		
11-CT3-33	Acoustic Tile (Light Grey)	100%	Cellulose Fibers	50%	08/31	MG
			Mineral Wool Fibers	30%		
			Perlite	20%		
12-CT3-34	Acoustic Tile (Light Grey)	100%	Cellulose Fibers	50%	08/31	WP
			Mineral Wool Fibers	30%		
			Perlite	20%		
12-CT3-35	Acoustic Tile (Light Grey)	100%	Cellulose Fibers	50%	08/31	WP
			Mineral Wool Fibers	30%		
			Perlite	20%		
12-CT3-36	Acoustic Tile (Light Grey)	100%	Cellulose Fibers	50%	08/31	WP
			Mineral Wool Fibers	30%		
			Perlite	20%		
13-WB1-37	Drywall Material (White)	5%	Glass Wool Fibers	2%	08/31	WP
			Cellulose Fibers	1%		
			Gypsum / Binders	97%		
	DW Paper / Tape (Tan / White)	25%	Cellulose Fibers	100%		
	Joint Compound (White)	70%	Calcite / Talc / Binders	100%		

Moody Labs
2051 Valley View Lane
Farmers Branch, TX 75234 Phone: (972) 241-8460

PLM Detail Report

Supplement to PLM Summary Report

NVLAP Lab Code 102056-0
TDSHS License No. 30-0084

Client : Terracon - Naperville
Project : Village of Oak Park, 700 Madison Street, Oak Park, IL
Project # : 11187250

Lab Job No. : 18B-11107
Report Date : 08/31/2018

Sample Number	Layer	% Of Sample	Components	% of Layer	Analysis Date	Analyst
13-WB1-38	Drywall Material (White)	65%	Glass Wool Fibers	2%	08/31	WP
			Cellulose Fibers	1%		
			Gypsum / Binders	97%		
	DW Paper / Tape (Tan / White)	15%	Cellulose Fibers	100%		
	Joint Compound (White)	20%	Calcite / Talc / Binders	100%		
13-WB1-39	Drywall Material (White)	25%	Glass Wool Fibers	2%	08/31	WP
			Cellulose Fibers	1%		
			Gypsum / Binders	97%		
	DW Paper / Tape (Tan / White)	25%	Cellulose Fibers	100%		
	Joint Compound (White)	50%	Calcite / Talc / Binders	100%		
14-FC6-40	Leveling Compound (Grey)	75%	Binders / Fillers	100%	08/31	WP
	Mortar (Grey)	25%	Aggregate	65%		
			Cement Binders	35%		
14-FC6-41	Leveling Compound (Grey)	50%	Binders / Fillers	100%	08/31	WP
	Mortar (Grey)	50%	Aggregate	65%		
			Cement Binders	35%		
14-FC6-42	Leveling Compound (Grey)	50%	Binders / Fillers	100%	08/31	WP
	Mortar (Grey)	50%	Aggregate	65%		
			Cement Binders	35%		
15-MA3/MA4-43	Grout / Mortar (Grey)	100%	Aggregate	65%	08/31	WP
			Cement Binders	35%		
15-MA3/MA4-44	Grout / Mortar (Grey)	100%	Aggregate	65%	08/31	WP
			Cement Binders	35%		
15-MA3/MA4-45	Grout / Mortar (Grey)	100%	Aggregate	65%	08/31	WP
			Cement Binders	35%		
16-MA3/MA4-46	Grout (Black)	90%	Aggregate	65%	08/31	WP
			Cement Binders	35%		
	Mortar (Grey)	10%	Aggregate	65%		
			Cement Binders	35%		

Moody Labs
2051 Valley View Lane
Farmers Branch, TX 75234 Phone: (972) 241-8460

PLM Detail Report

Supplement to PLM Summary Report

NVLAP Lab Code 102056-0
TDSHS License No. 30-0084

Client : Terracon - Naperville
Project : Village of Oak Park, 700 Madison Street, Oak Park, IL
Project # : 11187250

Lab Job No. : 18B-11107
Report Date : 08/31/2018

Sample Number	Layer	% Of Sample	Components	% of Layer	Analysis Date	Analyst
16-MA3/MA4-47	Grout (Black)	90%	Aggregate	65%	08/31	WP
			Cement Binders	35%		
	Mortar (Grey)	10%	Aggregate	65%		
			Cement Binders	35%		
16-MA3/MA4-48	Grout (Black)	90%	Aggregate	65%	08/31	WP
			Cement Binders	35%		
	Mortar (Grey)	10%	Aggregate	65%		
			Cement Binders	35%		
17-FT2-49	Floor Tile (Off-White)	98%	Calcite / Vinyl Binders	100%	08/31	WP
	Black Mastic (Black)	2%	Chrysotile	5%		
			Tar Binders	95%		
17-FT2-50	Floor Tile (Off-White)	98%	Calcite / Vinyl Binders	100%	08/31	WP
	Black Mastic (Black)	2%	Chrysotile	5%		
			Tar Binders	95%		
17-FT2-51	Floor Tile (Off-White)	98%	Calcite / Vinyl Binders	100%	08/31	WP
	Black Mastic (Black)	2%	Chrysotile	5%		
			Tar Binders	95%		
18-FT2-52	Floor Tile (Grey)	97%	Calcite / Vinyl Binders	100%	08/31	WP
	Black Mastic (Black)	3%	Chrysotile	5%		
			Tar Binders	95%		
18-FT2-53	Floor Tile (Grey)	97%	Calcite / Vinyl Binders	100%	08/31	WP
	Black Mastic (Black)	3%	Chrysotile	5%		
			Tar Binders	95%		
18-FT2-54	Floor Tile (Grey)	97%	Calcite / Vinyl Binders	100%	08/31	WP
	Black Mastic (Black)	3%	Chrysotile	5%		
			Tar Binders	95%		
19-HP1-55	Plaster (Grey)	100%	Synthetic Fibers	3%	08/31	WP
			Aggregate	62%		
			Cement Binders	35%		

Moody Labs
2051 Valley View Lane
Farmers Branch, TX 75234 Phone: (972) 241-8460

PLM Detail Report

Supplement to PLM Summary Report

NVLAP Lab Code 102056-0
TDSHS License No. 30-0084

Client : Terracon - Naperville
Project : Village of Oak Park, 700 Madison Street, Oak Park, IL
Project # : 11187250

Lab Job No. : 18B-11107
Report Date : 08/31/2018

Sample Number	Layer	% Of Sample	Components	% of Layer	Analysis Date	Analyst
19-HP1-56	Plaster (Grey)	100%	Synthetic Fibers	3%	08/31	WP
			Aggregate	62%		
			Cement Binders	35%		
19-HP1-57	Plaster (Grey)	100%	Synthetic Fibers	3%	08/31	WP
			Aggregate	62%		
			Cement Binders	35%		
19-HP1-58	Plaster (Grey)	100%	Synthetic Fibers	3%	08/31	WP
			Aggregate	62%		
			Cement Binders	35%		
19-HP1-59	Plaster (Grey)	100%	Synthetic Fibers	3%	08/31	WP
			Aggregate	62%		
			Cement Binders	35%		
20-CA2-60	Caulking (Light Grey)	100%	Chrysotile	5%	08/31	MG
			Calcite / Binders	95%		
20-CA2-61	Caulking (Light Grey)	100%	Chrysotile	5%	08/31	MG
			Calcite / Binders	95%		
20-CA2-62	Caulking (Light Grey)	100%	Chrysotile	5%	08/31	MG
			Calcite / Binders	95%		
21-CA2-63	Caulking (Grey)	100%	Calcite	50%	08/31	MG
			Binders / Fillers	50%		
21-CA2-64	Caulking (Grey)	100%	Calcite	50%	08/31	MG
			Binders / Fillers	50%		
21-CA2-65	Caulking (Grey)	100%	Calcite	50%	08/31	MG
			Binders / Fillers	50%		
22-CA1-66	Caulking (White)	100%	Calcite	50%	08/31	MG
			Binders / Fillers	50%		
22-CA1-67	Caulking (White)	100%	Calcite	50%	08/31	WP
			Binders / Fillers	50%		

Moody Labs
2051 Valley View Lane
Farmers Branch, TX 75234 Phone: (972) 241-8460

PLM Detail Report

Supplement to PLM Summary Report

NVLAP Lab Code 102056-0
TDSHS License No. 30-0084

Client : Terracon - Naperville
Project : Village of Oak Park, 700 Madison Street, Oak Park, IL
Project # : 11187250

Lab Job No. : 18B-11107
Report Date : 08/31/2018

Sample Number	Layer	% Of Sample	Components	% of Layer	Analysis Date	Analyst
22-CA1-68	Caulking (White)	100%	Calcite	50%	08/31	WP
			Binders / Fillers	50%		

TEM Bulk Summary Report

Moody Labs
2051 Valley View Lane
Farmers Branch, TX 75234 Phone: (972) 241-8460

NVLAP Lab Code 102056-0
TDSHS License No. 30-0084

Client :	Terracon - Naperville	Lab Job No. :	18T-11107A
Project :	Village of Oak Park, 700 Madison Street, Oak Park, IL	Report Date :	09/05/2018
Project # :	11187250	Sample Date :	08/27/2018
Identification :	Asbestos, Bulk Sample Analysis		
Test Method :	Transmission Electron Microscopy / X-Ray Analysis (TEM/EDX) / Gravimetric Analysis. EPA 600/R93/116		

On 8/31/2018, two (2) bulk material samples were submitted by Heather Eckard of Terracon - Naperville for asbestos analysis by TEM/EDX/Gravimetric. The TEM Chatfield Detail Report is attached; additional information may be found therein. The results are summarized below:

Sample Number	Client Sample Description / Location	Asbestos Content
17-FT2-49	12" x 12" Floor Tile (White) and Mastic (Black), Southeast Side of Garage	2.2% Chrysotile - Floor Tile
18-FT2-52	12" x 12" Floor Tile (Blue) and Mastic (Black), Southeast Side of Garage	2.8% Chrysotile - Floor Tile

These samples were analyzed by layers. Quantification, unless otherwise noted, is performed by calibrated visual estimate. Results may not be reproduced except in full. This test report relates only to the samples tested. These test results do not imply endorsement by NVLAP or any agency of the U.S. Government. Accredited by the National Voluntary Laboratory Accreditation Program for Bulk Asbestos Fiber Analysis under Lab Code 102056.

Analyst(s): Roshaun Wilkerson

Lab Manager : Heather Lopez — Approved Signatory : Heather Lopez

Lab Director : Bruce Crabb — Approved Signatory : Bruce Crabb

Thank you for choosing Steve Moody Micro Services

Moody Labs
2051 Valley View Lane
Farmers Branch, TX 75234 Phone: (972) 241-8460

TEM Chatfield Detail Report

Supplement to TEM Bulk Summary Report

NVLAP Lab Code 102056-0
TDSHS License No. 30-0084

Client : Terracon - Naperville
Project : Village of Oak Park, 700 Madison Street, Oak Park, IL
Project # : 11187250

Lab Job No. : 18T-11107A
Report Date : 09/05/2018

Sample Number	Layer	Mass			Percent of Sample
17-FT2-49	Floor Tile	Original Sample	0.2807 grams		
		Ashed Sample	0.2466 grams	Ashed	12.15%
		Acid Washed Sample	0.0419 grams	Acid	85.07%
		Sediment	N/A grams	Sediment	N/A
		Percent Remaining	14.93%		
		Estimated Asbestos Percentage	15% Chrysotile		
		TEM - Gravimetric Result	2.2% Chrysotile		
		Analyst: Roshaun Wilkerson		Analyzed On: 09/05/2018	
18-FT2-52	Floor Tile	Original Sample	0.2026 grams		
		Ashed Sample	0.1806 grams	Ashed	10.86%
		Acid Washed Sample	0.0285 grams	Acid	85.93%
		Sediment	N/A grams	Sediment	N/A
		Percent Remaining	14.07%		
		Estimated Asbestos Percentage	20% Chrysotile		
		TEM - Gravimetric Result	2.8% Chrysotile		
		Analyst: Roshaun Wilkerson		Analyzed On: 09/05/2018	

Terracon

Asbestos Bulk Sample Log & Chain of Custody Form

Lab Use Only: BB-11107PLM68

Glendale Heights: 192 Exchange Blvd., Glendale Heights, IL 60139 (630) 717-4263

Lab Location:

Project Name:	Village of Oak Park	Project Number:	11187250	Project Manager:	Heather Eckard
Project Address:	700 Madison St.	City/State / Zip:	Oak Park, IL.	Email Results To:	Heather.eckard@terracon.com (815) 878-8582
Site/Building:					

Sample Identification HA # – BS Code – Sample #	Sample Location Description	HA General Location	Material Description (Color/Texture/Etc.)	Quantity (SF, LF, CF, Units)	NESHAP Category[1]	Condition[2]/ Notes
1 - RF8 - 01	Northwest Side	Roof	Roof Field Built-up Roof	5700 SF	F C1 C2	G D SD
↓ - ↓ - 02	Center					
↓ - ↓ - 03	South side ~~Side~~ Center					
2 - RF4 - 04	West Side Center	perimeter of Roof and mechanical units	Roof Flashing	500 LF	F C1 C2	G D SD
↓ - ↓ - 05	East Side - ~~North~~ South					
↓ - ↓ - 06	North HVAC Unit					
3 - RF4 - 07	NW Corner on skylight	Skylight, HVAC units NW corner - & South parapet wall.	Grey Flashing Patch	35 LF	F C1 C2	G D SD
↓ - ↓ - 08	South - LG HVAC unit					
↓ - ↓ - 09	South Parapet Wall					
4 - PM3 - 10	South - LG. HVAC unit	Roof South - Large HVAC unit	Canvas duct Tape	200 LF	F C1 C2	G D SD
↓ - ↓ - 11	↓ ↓					
↓ - ↓ - 12	East HVAC unit	East - HVAC unit				
5 - RF7 13	North West Vent	Roof Vent Pipes	Black Sealant on vent pipes	96	F C1 C2	G D SD
↓ - ↓ - 14	North Center Vent					
↓ - ↓ - 15	South Vent					

Sampling Date: 8/27/18 Collected by (print): Heather Eckard Inspector's Signature: Heather E. Eckard

Relinquished by: Heather Eckard Date/Time: 8/27/18 4pm Received by: Monica Tobar (via Fed Ex) Date/Time: 8/28/18 9:25am

Analysis: PLM EPA 600/R-93/116 ☒ PLM 400 Point Count ☐ TEM ☐ Other _____

Turnaround Time: 6 Hrs ☐ 24 Hrs ☐ 2 Days ☐ 3 Days ☒ 5 Days ☐ Other _____

Instructions: Terracon ARMS: ☒ Stop Positive: ☐ Number of samples: _____

* If HA 17+18 are None Detect. Please analyze one sample of each (Tile + mastic) by TEM. 3 Day TAT

[1] F = Friable; C1 = Category I Nonfriable: packings, gaskets, resilient floor covering, and asphalt roofing products; C2 = Category II Nonfriable: any non frible material other than Category I Nonfriable

[2] G = Good (no damage); D = Damaged (<10% distributed or <25% localized); or SD = Significantly Damaged (>10% distributed or >25% localized)

Terracon

Asbestos Bulk Sample Log & Chain of Custody Form

Glendale Heights: 192 Exchange Blvd., Glendale Heights, IL 60139 (630) 717-4263

Lab Use Only: 18B-11107

Lab Location:

Site/Building:

Project Number: 11187250

Sample Identification HA – BS Code – Sample #	Sample Location Description	HA General Location	Material Description (Color/Texture/Etc.)	Quantity (SF, LF, CF, Units)	NESHAP Category[1]	Condition[2]/ Notes
6-SC1-16	Skylight - west Side center	Roof Sky Light	Grey/Black skylight window Glazing (Exterior)	350 LF	F C1 C2	G D SD
" - " - 17	" - west Side north					
" - " - 18	" - East Side north					
7-SC1-19	skylight - North Side	Roof Skylight at The peak on Both Sides - possibly under NA-6	white skylight window Glazing (Exterior)	415 LF	F C1 C2	G D SD
" - " - 20	" - "					
" - " - 21	" - South Side.					
8-RF3-22	Roof - East side - North	Roof - North east Side	Grey Roll Shingle Patch	300 SF	F C1 C2	G D SD
" - " - 23	" - Center					
" - " - 24	" - South					
9-CA3-25	South wall	Front Brick wall	Black/Grey Exterior wall Caulk	40 LF	F C1 C2	G D SD
" - - 26	"					
" - - 27	"					
10-CA1-28	South west window Bay	Exterior windows - patching.	Exterior window/door Caulk (Clear)	100 LF	F C1 C2	G D SD
" - " - 29	South Windows					
" - " - 30	West - Door					
11-CT3-31	Front office	Front office, Bathrooms, Garage office and Janitors Closet (JC)	2'x2' hole/fissure Ceiling tile	500 SF	F C1 C2	G D SD
" - " - 32	Bathroom - west					
" - " - 33	Janitors closet					

Terracon

Asbestos Bulk Sample Log & Chain of Custody Form

Lab Use Only: 18B-11107

Lab Location:

Glendale Heights: 192 Exchange Blvd., Glendale Heights, IL 60139 (630) 717-4263

Site/Building:

Project Number: 11187250

Sample Identification HA – BS Code – Sample #	Sample Location Description	HA General Location	Material Description (Color/Texture/Etc.)	Quantity (SF, LF, CF, Units)	NESHAP Category[1]	Condition[2]/ Notes
12-CT3-34	Front office	Front office patch	2x2 Textured/Pinhole Ceiling tile	100 SF	F C1 C2	G D SD
↓-↓-35	↓					
↓-↓-36	↓					
13-WB1-37	Bathroom- east	Behind Panels, offices + Bathrooms + IC.	Drywall/Joint Compound	6,	F C1 C2	G D SD
↓-↓-38	↓ - west					
↓-↓-39	Janitors closet					
14-FC6-40	South west Side of Garage	Garage - over ceramic Floor tile (S. Side of Garage)	Grey leveling Compound	2400 SF	F C1 C2	G D SD
↓-↓-41	↓					
↓-↓-42	↓					
15-~~MA3~~ MA4-43	Garage	~~Gran Garage~~ Garage, Front office under HA 16, IC + Garage office	~~Hexagon~~ Grout + mortar on 1" Hexagon Ceramic Floor tile	5,700 SF	F C1 C2	G D SD
↓-↓-44	Garage office					
↓-↓-45	Garage Hallway					
16-~~MA3~~ MA4-46	Front office	Front office, Bathrooms, IC, ~~Garage~~	Grout + mortar on 8" ~~Bx~~ Tan Ceramic Floor tile	540 SF	F C1 C2	G D SD
↓-↓-47	Bathroom - West					
↓-↓-48	Janitors closet					
17-FT2-49	SE Side of Garage	Garage - Small Patch by SE. Side * part of Checkerboard pattern	12"x12" white Floor tile + Black mastic	125 SF	F C1 C2	G D SD
↓-↓-50						
↓-↓-51	↓					

Terracon

Asbestos Bulk Sample Log & Chain of Custody Form

Lab Use Only: 18B-11107

Lab Location:

Glendale Heights: 192 Exchange Blvd., Glendale Heights, IL 60139 (630) 717-4263

Site/Building:

Project Number: 11187850

Sample Identification HA – BS Code – Sample #	Sample Location Description	HA General Location	Material Description (Color/Texture/Etc.)	Quantity (SF, LF, CF, Units)	NESHAP Category[1]	Condition[2]/ Notes
18 - FT2 - 52	SE Side of Garage	Garage - Small Patch on S.E. Side	12"x12" Blue Floor tile + Black mastic	125 SF	F C1 C2	G D SD
↓ - ↓ - 53	↓					
↓ - ↓ - 54	↓					
19 - HP1 - 55	West Wall - North	West Exterior Wall	Plaster Wall (Exterior over Brick)	2,500 SF	F C1 C2	G D SD
↓ - ↓ - 56	↓ - ↓					
↓ - ↓ - 57	↓ - Center					
↓ - ↓ - 58	↓ - South					
↓ - ↓ - 59	↓ ↓	↓	↓		F C1 C2	G D SD
- -						
20 - CA2 - 60	Front Entrance Door	Front Entrance Door	Lt. Grey Exterior door Caulk	20 LF	F C1 C2	G D SD
↓ - ↓ - 61	↓					
↓ - ↓ - 62	↓					
21 - CA2 - 63	↓	↓	DK Grey Exterior door Caulk under CA20	20 LF	F C1 C2	G D SD
↓ - ↓ - 64	↓					
↓ - ↓ - 65	↓					
22 - CA1 - 66	Front Entrance Sm West Window	Front (2 Sm. windows)	White/Grey Exterior window Caulk	48 LF	F C1 C2	G D SD
↓ - ↓ - 67	↓ ↓					
↓ - ↓ - 68	↓ - Sm Window East.					

APPENDIX D

LICENSES AND CERTIFICATIONS

IDPH
ILLINOIS DEPARTMENT OF PUBLIC HEALTH

525-535 West Jefferson Street • Springfield, Illinois 62761-0001 • www.dph.illinois.gov

HEATHER E ECKARD
[redacted]

5/2/2018

ASBESTOS PROFESSIONAL LICENSE ID NUMBER: 10397

Enclosed is your Asbestos Professional License. Please note the expiration date on the card and in the image depicted below.

COPY OF THE ASBESTOS PROFESSIONAL LICENSE

Front of License

ILLINOIS DEPARTMENT OF PUBLIC HEALTH
IDPH
PROTECTING HEALTH, IMPROVING LIVES

ASBESTOS PROFESSIONAL LICENSE

ID NUMBER	ISSUED	EXPIRES
100 - 10397	5/2/2018	05/15/2019

HEATHER E ECKARD
[redacted]
Environmental Health

Back of License

ENDORSEMENTS	TC EXPIRES
INSPECTOR	2/9/2019
PROJECT MANAGER	3/19/2019
AIR SAMPLING PROFESSIONAL	

Alteration of this license shall result in legal action
This license issued under authority of the State of Illinois Department of Public Health
This license is valid only when accompanied by a valid training course certificate.

If you have any questions or need further assistance, contact the Asbestos Program at (217)782-3517 or fax (217)785-5897.

Our WEB address is: dph.illinois.gov/topics-services/environmental-health-protection/asbestos
EMAIL Address: dph.asbestos@illinois.gov

EARTHTECH, INC.

435 SHADOW WOOD DRIVE, YORKVILLE, IL 60560

Asbestos Building Inspector Refresher

THIS CERTIFIES THAT

Heather Eckard

Has successfully completed the IL Approved Asbestos Training Course and passed the Examination for purposes of accreditation under section 206 of Title II of the Toxic Substances Control Act (TSCA) and 326 IAC 18-2. Conducted at Amerisafe 3990 Enterprise Court, Aurora, IL 60554 630-862-2604

CLASS DATES: 2/9/2018

LOCATION: Amerisafe

EXAMINATION: 2/9/2018

EXPIRATION: 2/9/2019

CERTIFICATE NUMBER: 108838X18S103758

United States Department of Commerce
National Institute of Standards and Technology

Certificate of Accreditation to ISO/IEC 17025:2005

NVLAP LAB CODE: 102056-0

Steve Moody Micro Services, LLC

Farmers Branch, TX

is accredited by the National Voluntary Laboratory Accreditation Program for specific services, listed on the Scope of Accreditation, for:

Asbestos Fiber Analysis

This laboratory is accredited in accordance with the recognized International Standard ISO/IEC 17025:2005. This accreditation demonstrates technical competence for a defined scope and the operation of a laboratory quality management system (refer to joint ISO-ILAC-IAF Communique dated January 2009).

2018-07-01 through 2019-06-30

Effective Dates

For the National Voluntary Laboratory Accreditation Program

National Voluntary Laboratory Accreditation Program

SCOPE OF ACCREDITATION TO ISO/IEC 17025:2005

Steve Moody Micro Services, LLC
2051 Valley View Lane
Farmers Branch, TX 75234-8956
Mr. Bruce Crabb
Phone: 972-241-8460 Fax: 972-241-8461
Email: bruce.crabb@moodylabs.com
http://www.moodylabs.com

ASBESTOS FIBER ANALYSIS — NVLAP LAB CODE 102056-0

Bulk Asbestos Analysis

Code	*Description*
18/A01	EPA -- 40 CFR Appendix E to Subpart E of Part 763, Interim Method of the Determination of Asbestos in Bulk Insulation Samples
18/A03	EPA 600/R-93/116: Method for the Determination of Asbestos in Bulk Building Materials

Airborne Asbestos Analysis

Code	*Description*
18/A02	U.S. EPA's "Interim Transmission Electron Microscopy Analytical Methods-Mandatory and Nonmandatory-and Mandatory Section to Determine Completion of Response Actions" as found in 40 CFR, Part 763, Subpart E, Appendix A.

For the National Voluntary Laboratory Accreditation Program

APPENDIX E

SITE PHOTOGRAPHS

Photo #1 View of front of building

Photo #2 HA 1: Built-up roof field (Non-ACM)

Photo #3 **HA 2: Roof flashing (ACM)**

Photo #4 **HA 3: Grey roof flashing (patch) (ACM)**

Photo #5 HA 4: Canvas duct tape (Non-ACM)

Photo #6 **HA 5: Black sealant on vent pipes (ACM)**

Photo #7 **HA 6: Grey/Black skylight window glazing (exterior) (ACM)**

Photo #8 HA 7: White skylight window glazing (exterior) (Non-ACM)

Photo #9 HA 8: Grey roll shingle (patch) (non-ACM)

Photo #10 **HA 9: Black/grey exterior wall caulk (ACM)**

Photo #11 HA 10: Exterior window/door caulk (clear) (Non-ACM)

Photo #12 HA 11: 2'x2' hole/fissured ceiling tile (non-ACM)

Photo #13 HA 12: 2'x2' texture/pinhole ceiling tile (patch) (Non-ACM)

Photo #14 HA 13: Drywall and joint compound (non-ACM)

Photo #15 HA 14: Grey leveling compound (Non-ACM)

Photo #16 HA 15: Grout and mortar on 1" hexagonal ceramic floor tile (Non-ACM)

Photo #17 HA 16: Grout and mortar on 8" tan ceramic floor tile (non-ACM)

Photo #18 **HA 17 & 18: 12"x12" white floor tile (ACM), 12"x12" blue floor tile (ACM) and black mastic (ACM)**

Photo #19 HA 19: Plaster wall (exterior over brick) (Non-ACM)		**Photo #20** **HA 20: Light grey exterior door caulk (ACM)**
Photo #21 HA 21: Dark grey exterior door caulk under HA 20 (Non-ACM)		**Photo #22** HA 22: White/grey exterior window caulk (Non-ACM)

Reference 4

IDOT Standard Urban Single Lane Closure

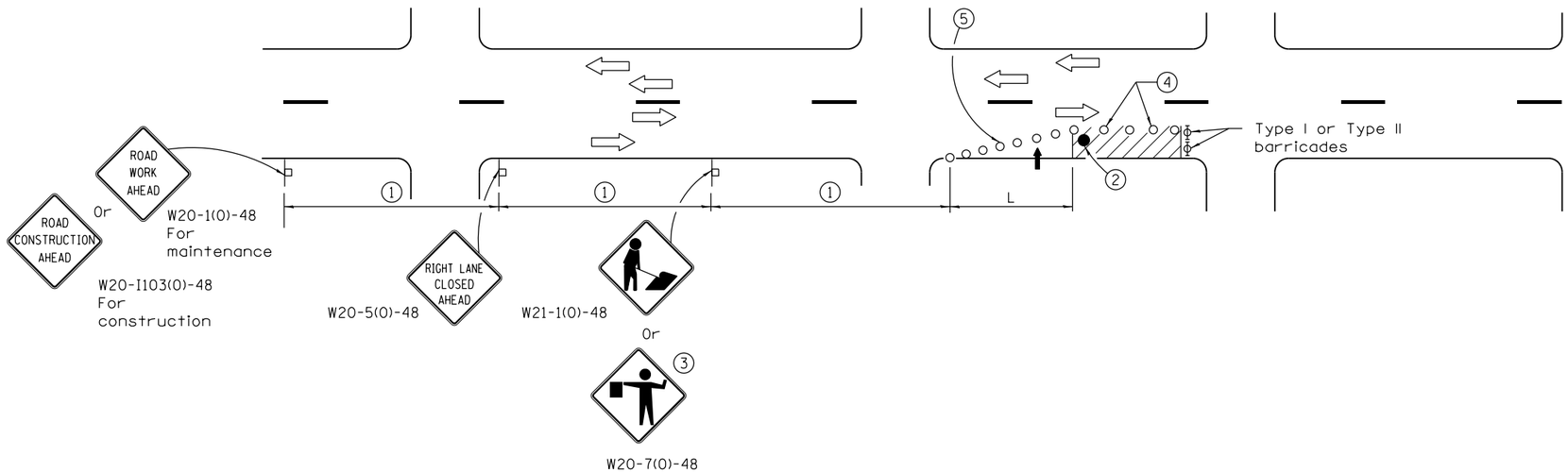

SIGN SPACING	
Posted Speed	Sign Spacing
55	500′ (150 m)
50-45	350′ (100 m)
<45	200′ (60 m)

SYMBOLS

- Arrow board
- Cone, drum or barricade
- Sign on portable or permanent support
- Work area
- Barricade or drum with flashing light
- Flagger with traffic control sign.

1. Refer to SIGN SPACING TABLE for distances.
2. Required for speeds > 40 mph.
3. Use flagger sign only when flagger is present.
4. Cones at 25′ (8 m) centers for 250′ (75 m). Additional cones may be placed at 50′ (15 m) centers. When drums or Type I or Type II barricades are used, the interval between devices may be doubled.
5. Cones, drums or barricades at 20′ (6 m) centers in taper.

GENERAL NOTES

This Standard is used where at any time, day or night, any vehicle, equipment, workers or their activities encroach on the pavement requiring the closure of one traffic lane in an Urban area.

Calculate L as follows:

SPEED LIMIT	FORMULAS English	FORMULAS (Metric)
40 mph (70 km/h) or less:	$L = \frac{WS^2}{60}$	$L = \frac{WS^2}{150}$
45 mph (80 km/h) or greater:	L=(W)(S)	L=0.65(W)(S)

W = Width of offset in feet (meters).

S = Normal posted speed mph (km/h).

All dimensions are in inches (millimeters) unless otherwise shown.

Illinois Department of Transportation

APPROVED January 1, 2015
ENGINEER OF SAFETY ENGINEERING

APPROVED January 1, 2015
ENGINEER OF DESIGN AND ENVIRONMENT

ISSUED 1-1-97

DATE	REVISIONS
1-1-15	Renamed standard. Moved
	case on Sheet 2 to new
	Highway Standard.
1-1-14	Revised workers sign
	number to agree with
	current MUTCD.

URBAN SINGLE LANE CLOSURE, MULTILANE, 2W WITH MOUNTABLE MEDIAN

STANDARD 701606–10

Reference 5

IDOT Sidewalk, corner or crosswalk closure

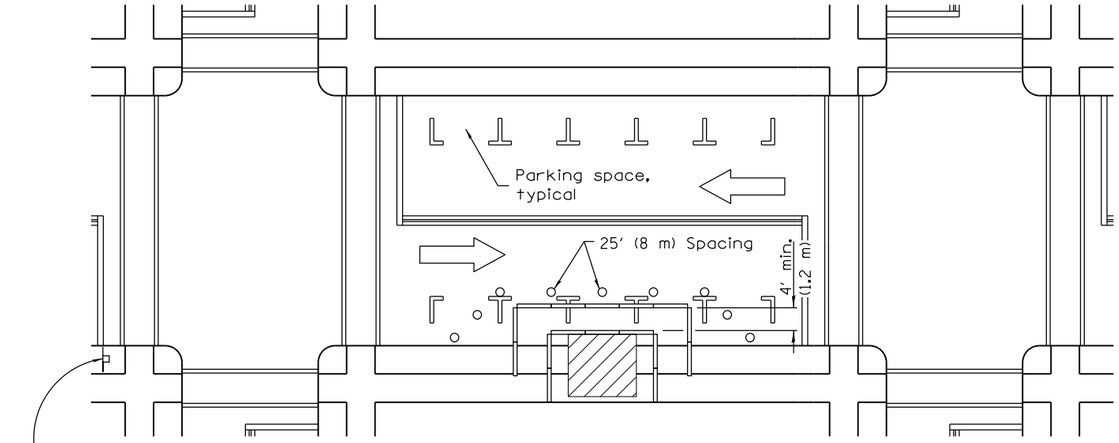

① Omit whenever duplicated by road work traffic control.

① ROAD CONSTRUCTION AHEAD — W20-I103(0)-48 for contract construction projects

Or

① ROAD WORK AHEAD — W20-1(0)-48 for maintenance and utility projects

SIDEWALK DIVERSION

SYMBOLS

- Work area
- Sign on portable or permanent support
- Barricade or drum
- Cone, drum or barricade
- Type III barricade
- Detectable pedestrian channelizing barricade

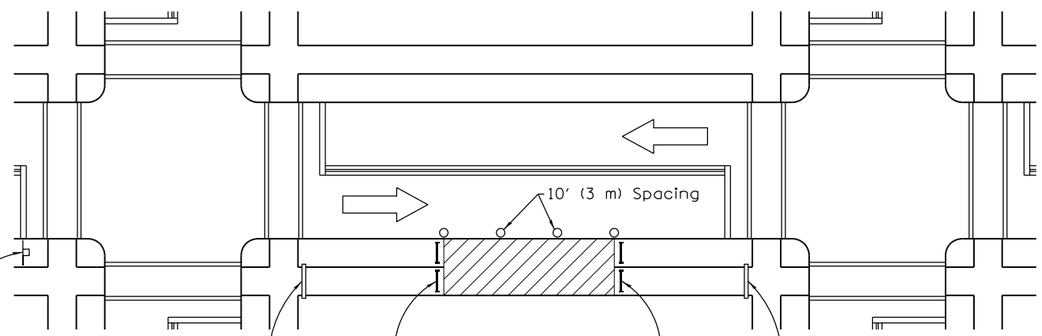

① ROAD CONSTRUCTION AHEAD — W20-I103(0)-48 for contract construction projects

Or

① ROAD WORK AHEAD — W20-1(0)-48 for maintenance and utility projects

SIDEWALK CLOSED — R11-I101-2418

SIDEWALK CLOSED / USE OTHER SIDE — R11-I102-2430

SIDEWALK CLOSED / USE OTHER SIDE — R11-I102-2430

SIDEWALK CLOSURE

GENERAL NOTES

This Standard is used where, at any time, pedestrian traffic must be rerouted due to work being performed.

This Standard must be used in conjunction with other Traffic Control & Protection Standards when roadway traffic is affected.

Temporary facilities shall be detectable and accessible.

The temporary pedestrian facilities shall be provided on the same side of the closed facilities whenever possible.

The SIDEWALK CLOSED / USE OTHER SIDE sign shall be placed at the nearest crosswalk or intersection to each end of the closure. Where the closure occurs at a corner, the signs shall be erected on the corners across the street from the closure. The SIDEWALK CLOSED signs shall be used at the ends of the actual closures.

Type III barricades and R11-2-4830 signs shall be positioned as shown in "ROAD CLOSED TO ALL TRAFFIC" detail on Standard 701901.

All dimensions are in inches (millimeters) unless otherwise shown.

DATE	REVISIONS
4-1-16	Omitted orange safety fence
	from standard as this is
	covered in the std. spec.
1-1-12	Added SIDEWALK DIVERSION.
	Modified appearance of
	plan views. Renamed Std.

Illinois Department of Transportation

APPROVED April 1, 2016
ENGINEER OF SAFETY ENGINEERING

APPROVED April 1, 2016
ENGINEER OF DESIGN AND ENVIRONMENT

ISSUED 1-1-97

SIDEWALK, CORNER OR CROSSWALK CLOSURE

(Sheet 1 of 2)

STANDARD 701801-06

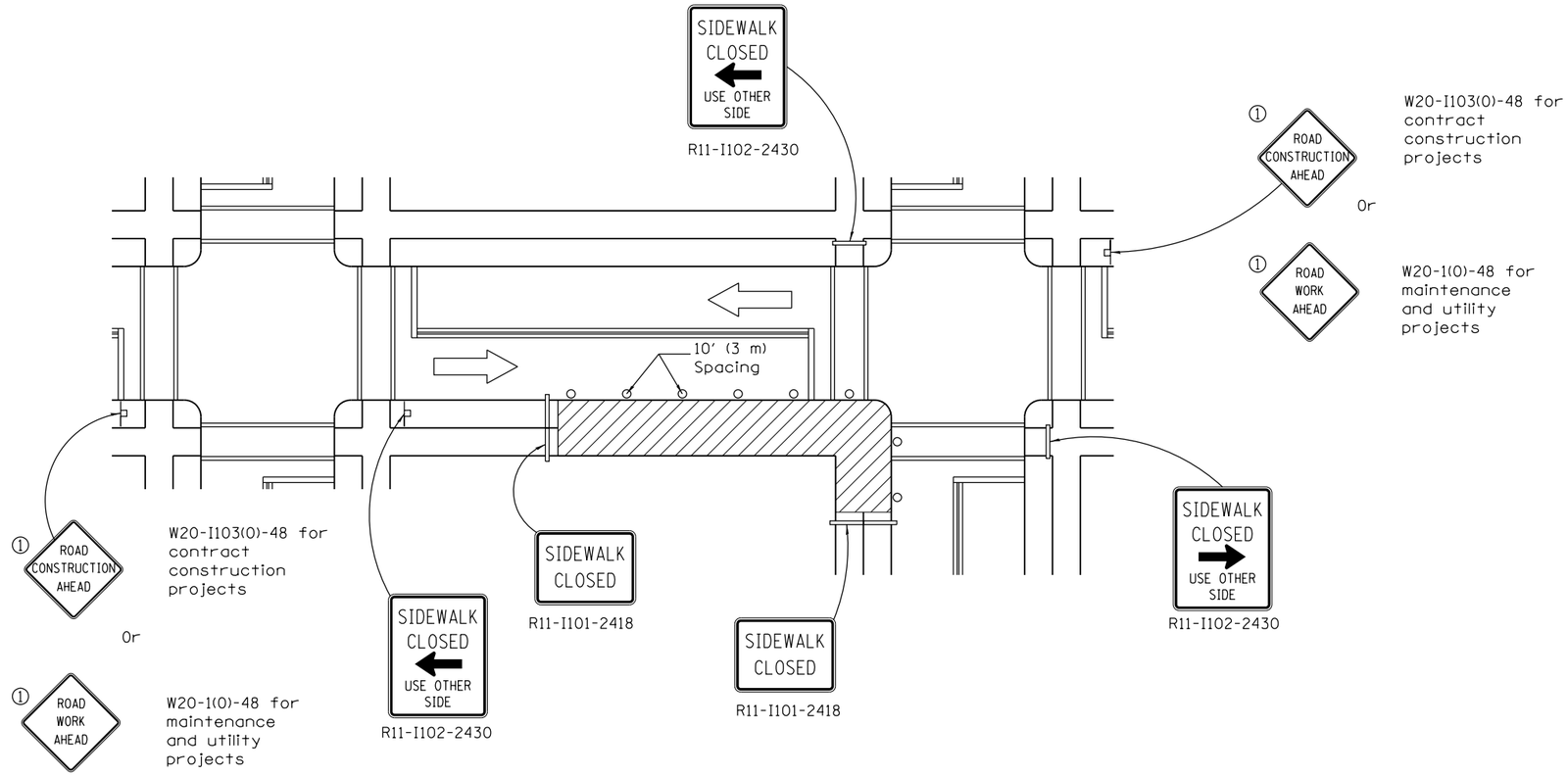

CORNER CLOSURE

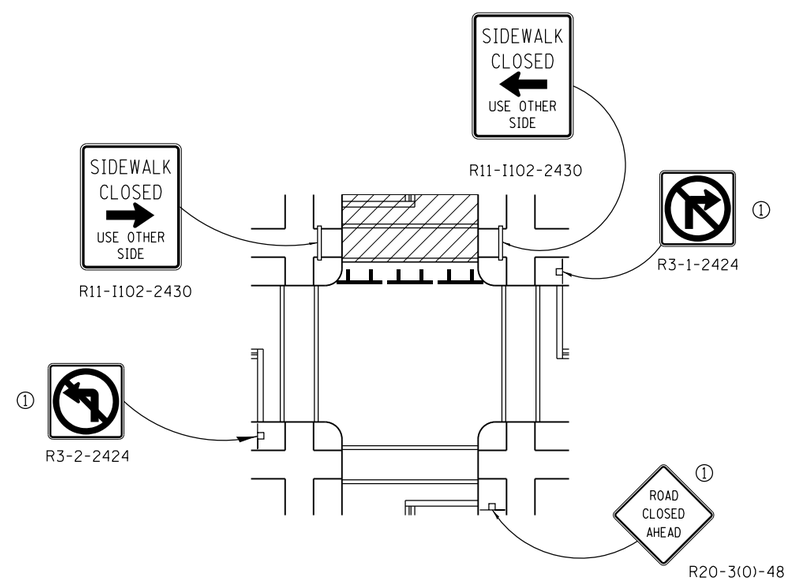

CROSSWALK CLOSURE

Illinois Department of Transportation

APPROVED April 1, 2016
ENGINEER OF SAFETY ENGINEERING
APPROVED April 1, 2016
ENGINEER OF DESIGN AND EVIRONMENT

ISSUED 1-1-97

SIDEWALK, CORNER OR CROSSWALK CLOSURE

(Sheet 2 of 2)

STANDARD 701801–06

Reference 6

Utility Disconnections Plan

18-11 Demolition:
Utility Disconnection and Removals
700 Madison St, Oak Park

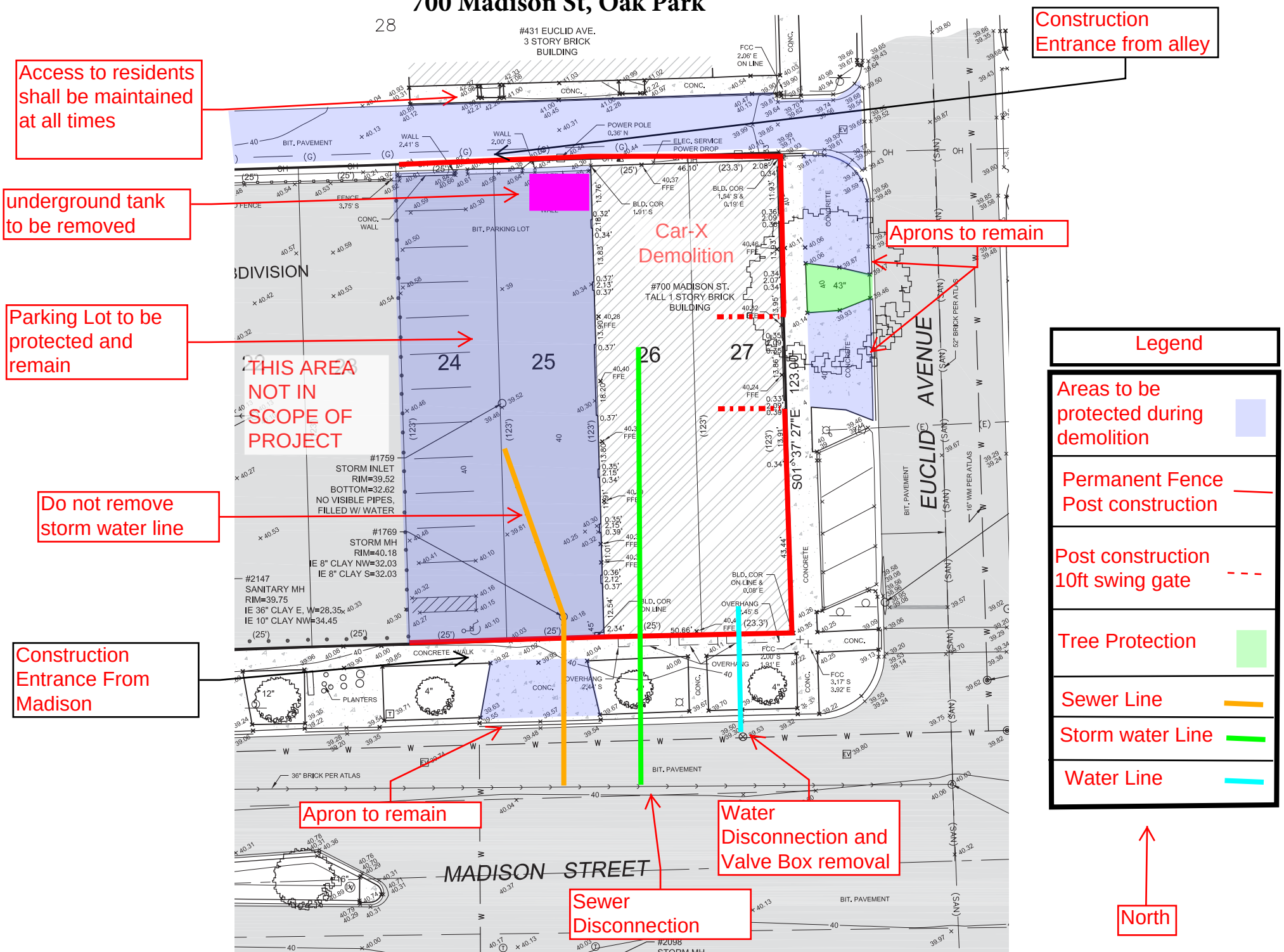

Reference 7

Site-Work Plan

18-11 Demolition:
Site- Work Plan
700 Madison St, Oak Park

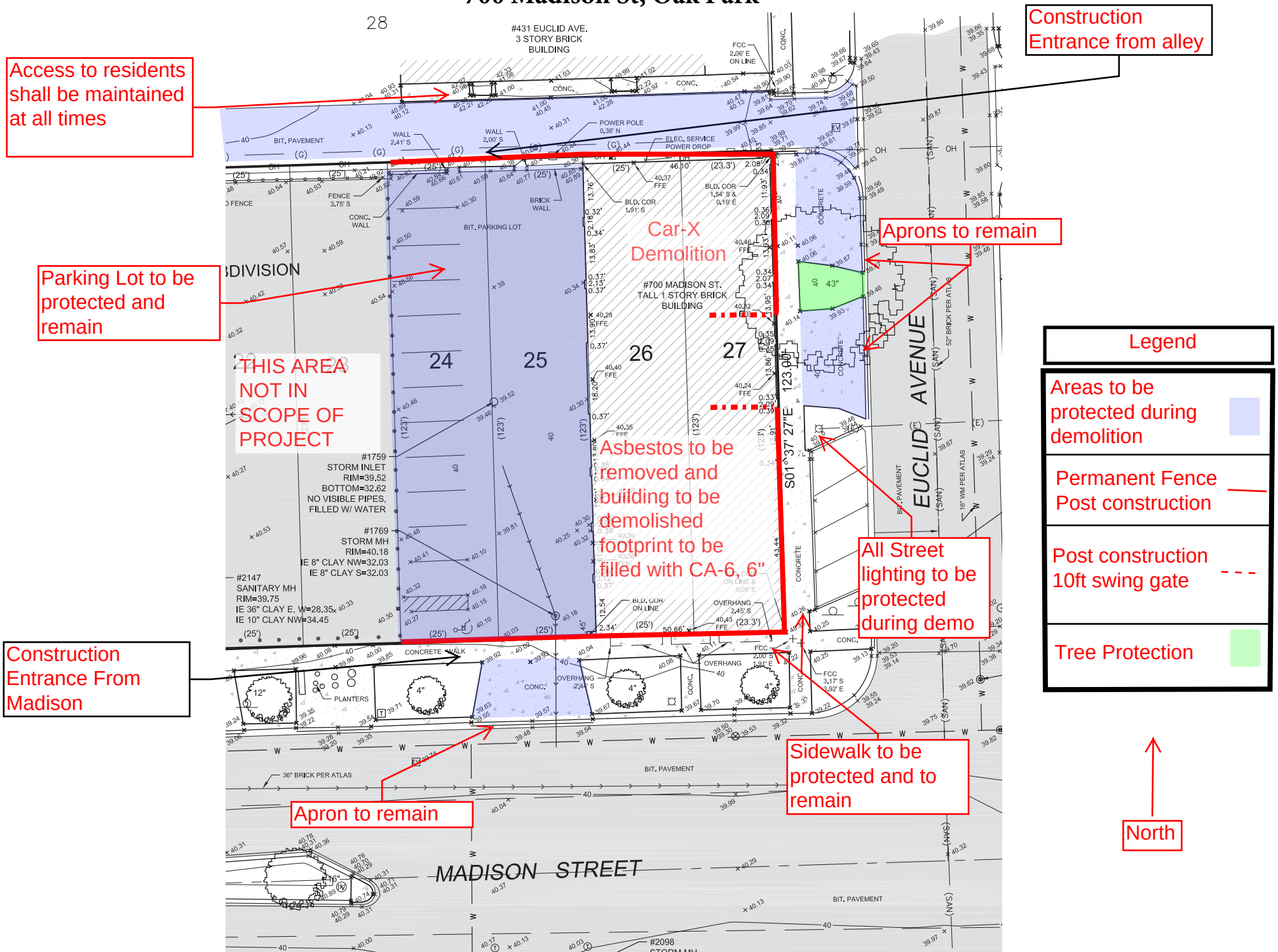

Reference 8

Title Commitments (accessed via drop-box)

Commitment No. 160248000085

ATTORNEYS'
TITLE
GUARANTY
FUND,
INC.

CHAMPAIGN, ILLINOIS

COMMITMENT FOR TITLE INSURANCE

Attorneys' Title Guaranty Fund, Inc., an Illinois corporation ("ATG®"), for a valuable consideration, commits to issue its policy or policies of title insurance, as identified in Schedule A, in favor of the Proposed Insured named in Schedule A, as owner or mortgagee of the estate or interest in the land described or referred to in Schedule A, upon payment of the premiums and charges and compliance with the Requirements; all subject to the provisions of Schedules A and B and to the Conditions of this Commitment.

This Commitment shall be effective only when the identity of the Proposed Insured and the Amount of the policy or policies committed for have been inserted in Schedule A by ATG.

All liability and obligation under this Commitment shall cease and terminate six months after the Effective Date or when the policy or policies committed for shall issue, whichever first occurs, provided that the failure to issue the policy or policies is not the fault of ATG.

ATG will provide a sample of the policy form upon request.

This Commitment shall become effective and binding when Schedule A and Schedule B and any endorsements are signed by a title insurance agent or other authorized signatory of ATG.

CONDITIONS

1. The term mortgage, when used herein, shall include deed of trust, trust deed, or other security instrument.
2. If the proposed Insured has or acquired actual knowledge of any defect, lien, encumbrance, adverse claim or other matter affecting the estate or interest or mortgage thereon covered by this Commitment other than those shown in Schedule B hereof, and shall fail to disclose such knowledge to ATG in writing, ATG shall be relieved from liability for any loss or damage resulting from any act of reliance hereon to the extent ATG is prejudiced by failure to so disclose such knowledge. If the proposed Insured shall disclose such knowledge to ATG, or if ATG otherwise acquires actual knowledge of any such defect, lien, encumbrance, adverse claim or other matter, ATG at its option may amend Schedule B of this Commitment accordingly, but such amendment shall not relieve ATG from liability previously incurred pursuant to paragraph 3 of these Conditions.
3. Liability of ATG under this Commitment shall be only to the named proposed Insured and such parties included under the definition of Insured in the form of policy or policies committed for and only for actual loss incurred in reliance hereon in undertaking in good faith (a) to comply with the requirements hereof, or (b) to eliminate exceptions shown in Schedule B, or (c) to acquire or create the estate or interest or mortgage thereon covered by this Commitment. In no event shall such liability exceed the amount stated in Schedule A for the policy or policies committed for and such liability is subject to the insuring provisions and Conditions and the Exclusions from Coverage of the form of policy or policies committed for in favor of the proposed Insured which are hereby incorporated by reference and are made a part of this Commitment except as expressly modified herein.
4. This Commitment is a contract to issue one or more title insurance policies and is not an abstract of title or a report of the condition of title. Any action or actions or rights of action that the proposed Insured may have or may bring against ATG arising out of the status of the title to the estate or interest or the status of the mortgage thereon covered by this Commitment must be based on and are subject to the provisions of this Commitment.
5. *The policy to be issued contains an arbitration clause. All arbitrable matters when the Amount of Insurance is $2,000,000 or less shall be arbitrated at the option of either ATG or the Insured as the exclusive remedy of the parties. You may review a copy of the arbitration rules at www.alta.org.*

© ATG (REV. 1/12)

"ATG" is a registered trademark of Attorneys' Title Guaranty Fund, Inc.

ATTORNEYS' TITLE GUARANTY FUND, INC.

ATG® COMMITMENT FORM – SCHEDULE A

Commitment No.: 160248000085

State Issued: IL

File Name: A16-020-01

1. Effective Date: February 29, 2016

2. Policy or policies to be issued:

   [√] Owner's Policy: 2006 ALTA Owner's Policy Amount: $10,000.00

   Proposed Insured: 700 Madison LLC, an Illinois limited liability company

   [√] Loan Policy: 2006 ALTA Loan Policy Amount: To Come

   Proposed Insured: To Come

3. The estate or interest in the land described or referred to in this Commitment is a Fee Simple (if other, specify same) and title thereto is at the effective date hereof vested in:

   Graymorre Leasing, an Illinois general partnership

4. The land referred to in the Commitment is described as follows:

   Lots 24, 25, 26 and 27 in the Subdivision of Block 4 in Ogden and Jones Subdivision of the Southwest 1/4 of the Southeast 1/4 of Section 7, Township 39 North, Range 13, East of the Third Principal Meridian, in Cook County, Illinois

Tenney & Bentley
111 W. Washington St., #1900
Chicago, IL 60602
(312) 407-7800

Member No.
2480

Signature of Member or Authorized Signatory

ATTORNEYS' TITLE GUARANTY FUND, INC.

ATG® COMMITMENT FORM – SCHEDULE B

Commitment No.: 160248000085

Effective Date: February 29, 2016
State Issued: IL
File Name: A16-020-01

SECTION I
REQUIREMENTS

The following requirements must be met:

1. Pay the agreed amounts for the interest in the Land and/or the mortgage to be insured.

2. Pay us the premiums, fees, and charges for the policy.

3. Documents satisfactory to us creating the interest in the Land and/or the mortgage to be insured must be signed, delivered, and recorded.

4. You must tell us in writing the name of anyone not referred to in this Commitment who will get an interest in the Land or who will make a loan on the Land. We may then make additional requirements or exceptions.

5. If ATG is acting as closing agent on behalf of the proposed Insureds, the following additional requirements must be satisfied at or prior to the closing:
   a. The borrower and seller must bring a valid government issued photo ID bearing their signature to the closing.
   b. Each seller must provide a valid forwarding address and social security number to be submitted to the IRS for 1099 purposes.
   c. Payoff letters must be current and not subject to additional terms. We reserve the right to verify payoff figures prior to disbursement. Any additional funds required to satisfy a lien in full must be deposited by the parties involved immediately.
   d. All funds brought to closing must be in the form of wire transfer, certified or cashier's check made payable to Attorneys' Title Guaranty Fund, Inc.

6. Note for information: The land lies within the area designated under the predatory lending database program (765 ILCS 77/70, *et seq.*). A Compliance Certificate or an Exempt Certificate must be obtained from the Illinois Department of Financial and Professional Regulation and recorded simultaneously with the mortgage to be insured hereunder. If the certificates are not obtained, the policy or policies to be issued will be subject to the following exception: "Consequences of the failure to obtain and record a Certificate of Compliance or an Exempt Certificate as required pursuant to the predatory lending database program (765 ILCS 77/70, *et seq.*)".

7. If the Property is Commercial and Extended Coverage over the five General Exceptions is requested, ATG should be furnished with the following:
   a. A current ALTA/ASCM or Illinois Land Title Survey Certified to Attorneys' Title Guaranty Fund, Inc.;
   b. A Properly executed ALTA Statement;
   Matters disclosed by the above documentation will be shown specifically on Schedule B.
   NOTE: There will be an additional charge for this coverage.
8. The Good Funds provision of the Illinois Title Insurance Act (215 ILCS 155/26) became effective January 1, 2010. This law imposes stricter rules on the type of funds that can be accepted for real estate closings and requires wired funds in many circumstances. Contact your settlement agent to confirm the type of funds that are required for your transaction.

Tenney & Bentley
111 W. Washington St., #1900
Chicago, IL 60602
(312) 407-7800

Member No.
2480

T. James Helms
Signature of Member or Authorized Signatory

9. Per Illinois law, for closings on or after January 1, 2011, ATG will issue Closing Protection Letters to the parties to the transaction if it is closed by ATG or its approved title insurance agent.

10. If you are a lender, your ATG Closing Protection Letter will be valid only if you receive it in one of the following two ways, (1) as an email from the domain "@atgf.com," or (2) as a fax from a fax number that is in the range 312.224.0195 thru 312.224.0395 or 217.403.7400 thru 217.403.7459.

SECTION II
EXCEPTIONS

Any policy we issue will have the following exceptions unless they are taken care of to our satisfaction:

Standard Exceptions

1. Rights or claims of parties in possession not shown by the Public Records.

2. Any encroachment, encumbrance, violation, variation, or adverse circumstance that would be disclosed by an inspection or an accurate and complete land survey of the Land.

3. Easements, or claims of easements, not shown by the Public Records.

4. Any lien, or right to a lien, for services, labor, or material heretofore or hereafter furnished, imposed by law and not shown by the Public Records; and

5. Taxes or special assessments that are not shown as existing liens by the Public Records.

Special Exceptions

1. Defects, liens, encumbrances, adverse claims, or other matters, if any, created, first appearing in the Public Records, or attaching subsequent to the Effective Date hereof but prior to the date the proposed Insured acquires for value of record the estate or interest or mortgage thereon covered by this Commitment.

2. Any loan policy issued pursuant to this Commitment will be subject to the following exceptions (a) and (b), in the absence of the production of the data and other matters contained in the ATG ALTA Statement form or an equivalent form:

   a. Any lien, or right to a lien, for services, labor, or material heretofore or hereafter furnished, imposed by law and not shown by the Public Records;

   b. Consequences of the failure of the lender to pay out properly the whole or any part of the loan secured by the mortgage described in Schedule A, as affecting: (i) the validity of the lien of said mortgage; and (ii) the priority of the lien over any other right, claim, lien, or encumbrance that has or may become superior to the lien of said mortgage before the disbursement of the entire proceeds of the loan.

3. Payment of the full consideration to, or for the account of, the grantors or mortgagors for the estate or interest to be insured.

4. Recordation or registration of duly executed and delivered instruments sufficient to create the estate or interest to be insured.

5. Taxes for the year 2015 and thereafter
   First installment 2015 taxes in the amount of $15,149.62 are PAID.
   Second installment 2015 taxes are NOT YET DUE AND PAYABLE.
   2016 taxes not yet due and payable.

   PIN No. 16-07-418-018-0000

6. Party wall and party wall rights of the owners of the adjoining land.

7. Encroachment of the building located on the land over and across the South line by .09 of a foot, as disclosed by survey made by Jens K. Doe, dated April 10, 1990 number 90505.

8. Encroachment of stone sill over the door onto public property South and adjoining by .72 of a foot and .69 of a foot, as disclosed by aforesaid survey.

9. Encroachment of sign located on the building on the land onto public property South and adjoining by 1.30 feet, as disclosed by aforesaid survey.

10. Encroachment of building located mainly on the land onto property West and adjoining by .04 of a foot, as disclosed by aforesaid survey.

11. The certificate of good standing for 700 Madison LLC issued by the Secretary of State should be produced, and in default thereof, the policy or policies to be issued will contain the following exception:

    "Consequences, if any, that may result because of the failure of the party in title to the estate or interest in the land described in Schedule A to comply with the applicable 'doing business' laws of the State of Illinois."

12. Upon a conveyance or mortgage of the land provide a certified copy of proper resolutions, passed by the members and/or partners of the party in title, authorizing the execution of the deed of conveyance or mortgage.

13. Franchise tax in favor of the State of Illinois.

14. The partnership agreement establishing Graymorre Leasing, an Illinois general Partnership together with all amendments thereto, properly identified in writing by all the partners as being the terms and provisions of the agreement under which the partnership, or the partners thereof, acquired and hold title or held title, should be furnished; and this Commitment is subject to such further exceptions, if any, as may then be deemed necessary. In addition, this Commitment is subject to such further exceptions, if any, that may be disclosed after a name search has been made for judgments and other matters against all the members of the partnership of Graymorre Leasing.

15. Terms, provisions and limitations of the partnership agreement for Graymorre Leasing partnership.

16. Upon a conveyance or mortgage of the land, we should be supplied with satisfactory proof of compliance with the terms of the agreement governing Graymorre Leasing, a partnership and this Commitment is subject to such further exceptions, if any, as may then be deemed necessary.

17. If Extended Coverage over the five General Exceptions is requested, ATG should be furnished with the following:

    A. A current boundary or Illinois Land Title Survey Certified to Attorneys' Title Guaranty Fund, Inc.;

    B. A Properly executed ALTA Statement;

    Matters disclosed by the above documentation will be shown specifically on Schedule B

    NOTE: There will be an additional charge for this coverage.

18. Information should be furnished establishing whether any written agreement has been entered into by and between any party or broker for the purposes of buying, selling, leasing, or otherwise conveying any interest in the land described herein; and, if any such agreement has been entered into, satisfactory evidence should be furnished establishing that the compensation agreed upon in such agreement has been paid and the broker's lien, or right to a lien, for such amount has been extinguished. In the event the evidence is not furnished, our policy or policies when issued will be subject to the following exception:

    "Any lien, or right to a lien, imposed by law under the provisions of the Commercial Real Estate Broker Lien Act, and not shown in the public records, for compensation agreed upon by a broker and the broker's client or customer under the terms of a written agreement entered into for the purposes of buying, selling, leasing, or otherwise conveying any interest in the land described in Schedule A".

19. Rights of a property manager, if any, to a statutory lien on the premises for its property manager's fee.

    Note: Furnish ATG with an affidavit by the owner stating that there is no property manager for the insured premises. In the absence thereof, provide a waiver of lien by the property manager covering the date of recording of the deed and mortgage to the insured.

20. Existing leases and tenancies, and rights of tenants thereunder, and those claiming by, through, or under those tenants.

21. Loss or damage by reason of there being recorded in the public records, any deeds, mortgages, lis pendens, liens or other title encumbrances subsequent to the Commitment date and prior to the effective date of the final Policy.

22. Any endorsement requested by an insured or proposed insured must be approved by ATG.

23. We find judgments, liens and matters of record involving a person or persons whose names are similar to ROGER L. WILSON and MARY FRANCES WILSON, General Partners of Graymorre Leasing. Relative thereto, a Personal Information Affidavit (ATG form 3008) establishing the identity of the above described person must be supplied in order to facilitate the exclusion, if possible, of those items.

End of Schedule B

ATTORNEYS' TITLE GUARANTY FUND, INC.
and
Affiliated Companies

PRIVACY POLICY NOTICE

This Notice sets forth the privacy policies and practices of Attorneys' Title Guaranty Fund, Inc. (ATG®) and its affiliated companies, ATG Trust Company, NLT Title, and The Judicial Sales Corporation. This Notice identifies the sources of nonpublic, personal information we collect regarding our customers, and specifies what measures we take to secure that information.

The words "**you**" and "**your**" mean all of our consumer customers who have a business relationship with us, such as:

- Insureds under ATG title insurance policies;
- Parties to real estate transactions;
- Persons with a trust account; and
- Borrowers who have a loan account or who have applied for a loan.

"We," "our," and **"us"** mean ATG and its affiliated companies listed above.

"Nonpublic personal information" means information about you that we collect in connection with providing a financial product or service to you. Non-public personal information does not include information that is available from public sources, such as telephone directories or government records.

An **"affiliate"** is a company we own or control, a company that owns or controls us, or a company that is owned or controlled by the same company that owns or controls us. Ownership does not mean complete ownership, but means owning a sufficient share to have control.

A **"nonaffiliated third party"** is a company that is not an affiliate of ours.

THE INFORMATION WE COLLECT

We collect nonpublic, personal information about you from the following sources:

- Information we receive from you on title insurance applications or other forms associated with your transaction with us;
- Information from a consumer reporting agency;
- Miscellaneous information about your transaction that becomes part of our file on your transaction with us; and
- Information about your transactions with nonaffiliated third parties.

We do not disclose any nonpublic, personal information about you to anyone, except as authorized by law.

THE CONFIDENTIALITY, SECURITY, AND INTEGRITY OF YOUR NONPUBLIC PERSONAL INFORMATION

We restrict access to nonpublic, personal information about you to only those employees who need to know that information in order to provide products or services to you. We maintain physical, electronic, and procedural safeguards that comply with federal regulations to protect your nonpublic personal information from unauthorized use.

NONPUBLIC PERSONAL INFORMATION AND NONAFFILIATED THIRD PARTIES

You have entrusted us with important personal information about you, and we will not disclose your nonpublic, personal information to nonaffiliated third parties, except as permitted by law.

NONPUBLIC PERSONAL INFORMATION AND FORMER CUSTOMERS

We do not disclose nonpublic, personal information about former customers, except as permitted by law.

5812 W. HIGGINS AVENUE
CHICAGO, ILLINOIS 60630

NORTH

MM SURVEYING CO., INC.

PHONE:(773)282-5900
FAX: (773)282-9424
mmsurvey1285@sbcglobal.net

PROFESSIONAL DESIGN FIRM No. 184-003233

PLAT OF SURVEY

OF

LOTS 24, 25, 26 AND 27 IN THE SUBDIVISION OF BLOCK 4 IN OGDEN AND JONES SUBDIVISION OF THE SOUTHWEST ¼ OF THE SOUTHEAST ¼ OF SECTION 7, TOWNSHIP 39 NORTH, RANGE 13, EAST OF THE THIRD PRINCIPAL MERIDIAN, IN COOK COUNTY, ILLINOIS.

COMMONLY KNOWN AS: 700 MADISON ST., OAK PARK, ILLINOIS

TOTAL LAND AREA = 12,091 sq.ft.

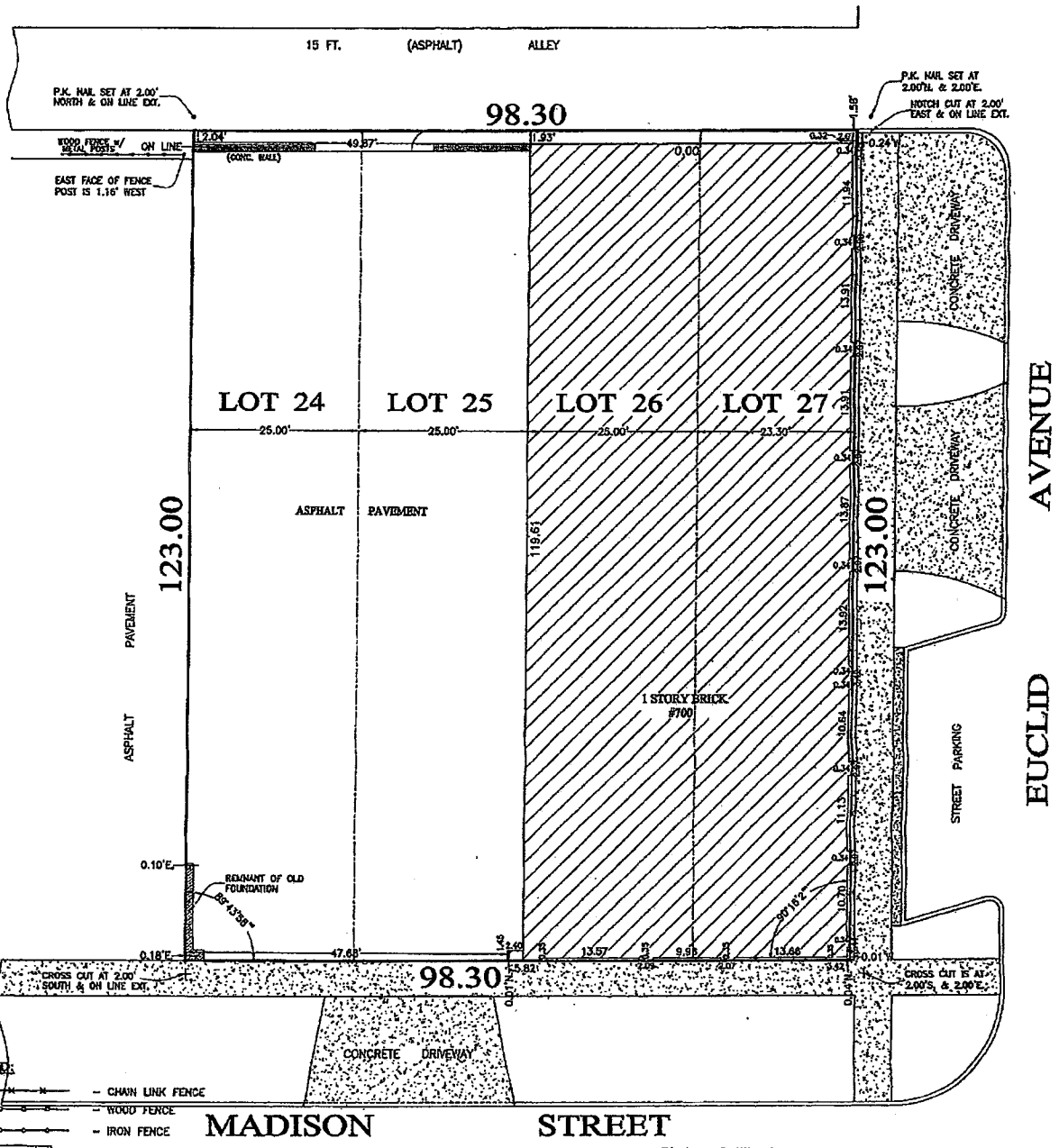

LEGEND:

- CHAIN LINK FENCE
- WOOD FENCE
- IRON FENCE
- CONCRETE PAVEMENT

E.F.P.	– ENCLOSED FRAME PORCH
O.F.P.	– OPEN FRAME PORCH
O.B.P.	– OPEN BRICK PORCH
O.C.P.	– OPEN CONC. PORCH
E.C.	– EDGE OF CONCRETE

ORDER NO. 86282

SCALE: 1 INCH= 16 FEET

FIELDWORK COMPLETION DATE : 17 MARCH 2016

ORDERED BY: TENNBY & BENTLEY

THIS PROFESSIONAL SERVICE CONFORMS TO THE CURRENT ILLINOIS MINIMUM STANDARDS FOR A BOUNDARY SURVEY.

FOR BUILDING LINES, EASEMENTS AND OTHER RESTRICTIONS NOT SHOWN HEREON, REFER TO YOUR DEED, TITLE POLICY AND LOCAL ZONING ORDINANCE, ETC.

LEGAL DESCRIPTION NOTED ON THIS PLAT WAS PROVIDED BY THE CLIENT AND MUST BE COMPARED WITH DEED AND/OR TITLE POLICY.

ALL DIMENSIONS ARE SHOWN IN FEET AND DECIMAL PARTS THEREOF.

State of Illinois
ss
County of Cook

TO: i.) 700 MADISON, LLC
ii.) ATTORNEYS' TITLE GUARANTY FUND

We, M M Surveying Co., Inc., do hereby certify that we have surveyed the above described property and that the plat hereon drawn is a correct representation of said survey.

Signature: Yb. Domozych

Date: MARCH 18 - 2016

REG. ILL. Land Surveyor No. 35-3758
LIC. EXP. NOVEMBER 30, 2016

Reference 9

Oak Park Demolition Guidelines

DEMOLITION GUIDELINES

1. The application must be completed fully and legibly, and accompanied by all required items of information listed within the Submittal Requirements Checklist and other submittals listed herein below if applicable.
2. Only persons having a proprietary interest in the subject property may file an application. If signed by an agent of the owner, the application shall be accompanied by a written instrument, executed by the person with proprietary interest under oath, establishing the agency. If title is in a land trust, the application must be filed by the Trustee.
3. All items of information requested on this application form must be provided prior to processing of the application. PLEASE ALLOW 7 TO 10 BUSINESS DAYS FOR PROCESSING OF APPLICATION.
4. INCOMPLETE APPLICATIONS WILL BE RETURNED WITHOUT PROCESSING.
5. The completed application, items of information and other required submittals shall be filed with the Building & Property Standards Department and the permit fee shall be paid at time of application. The application fee is not refundable even if the request for demolition is subsequently withdrawn.
6. Proof of Ownership and/or proprietary interest in the property shall be established by a copy of current Deed, Title Policy, written Commitment to Purchase or written Option to Buy.
7. The Plat of Survey must show all current improvements to the property.
8. The Site Plan shall indicate the following information:
a. Extent of structure(s) to be demolished.
b. Location of a temporary fence [six (6) feet high for 1- and 2-Family properties and eight (8) feet high for all other properties] surrounding the property or area of work, including location of lockable gate for movement of construction equipment. Fence shall be either solid plywood or chain link fence with opaque fabric attached to inside surface of fence to reduce view and control dust. The contractor shall post a sign, secured to the fence, indicating "CONSTRUCTION SITE — NO TRESSPASSING", the demolition contractor's name and emergency contact number and the fence contractor's name and emergency contact number.
c. Location of protective measures for all trees within the public right-of-way (refer to handout on tree protection requirements).
d. Location and description of all measures to protect adjacent properties and structures.
e. Location of all traffic control devices; sidewalk or street barricades (requires separate permit) and sidewalk closure signage.
f. Location of dumpster or debris hauler.
10. The applicant/owner/contractor shall have the respective utility company submit a letter to the Building & Property Standards Department indicating the property address and date for which the utility service has been cut-off. Note that this is not a requirement for discontinuation of service but for physical severance of the utility line from the structure(s) being demolished.
11. A copy of the Certificate of Appropriateness shall be submitted for any structure located within a historic district.
12. The applicant shall notify adjacent land owners in writing of the pending demolition. A copy of the letter(s) sent to each property owner shall be submitted.
13. Where the building to be demolished is immediately adjacent to another structure, a written report prepared, signed and sealed by a licensed architect or structural engineer shall be submitted to verify that the structure to be demolished is structurally independent of the adjacent building.
14. A copy of a valid Demolition Permit issued by the Cook County Department of Environmental Control or proof of application for such permit shall be submitted with this application form.
15. A series of recent photographs of the structure to be demolished shall be submitted with this application form. Photographs shall be taken of each principal structure elevation as well as any and all structures on adjacent properties. Direction of view and street address shall be indicated on the photographs.
16. Right-of-Way Obstruction Permits are required for all sidewalk and/or street closures as well as for any dumpster to be located in the public right-of-way.
17. A Plumbing Permit is required for work involved with the severing and capping of water and sewer lines servicing the structure(s) to be demolished. The Plumbing Permit shall be secured and the completed work accepted by the Public Works Department prior to issuance of the Demolition Permit.
18. Right-of-Way Opening Permits are required for any work in the public right-of-way that may be required to sever water and sewer lines servicing the structure(s) to be demolished.
19. A hydrant deposit is required whenever the public water hydrant is used as a source for water during demolition work.

Conditions of Permit

1. Work hours are limited to between 7 a.m. and 6 p.m.
2. Contractor shall deliver all existing water meters to the Public Works Department prior to the start of demolition work.
3. Demolition work shall not begin until site has been inspected by the Village for placement of temporary fencing and temporary tree protection.
4. The contractor shall wet down the structure to be demolished as well as the resulting debris as required to minimize the creation of air-borne dust and debris. Demolition work shall not begin until the contractor has established either by way of a hose connected to the public water hydrant or by the use of a water truck on site, a source for wetting down the structure and resulting debris during the demolition process.
5. All foundations and footings associated with the structure to be demolished shall be removed as part of the work. 6. All demolition debris, equipment and temporary protections shall be removed from the site upon completion of the demolition. In no case shall demolition debris be allowed to remain on the site longer than 7 days after the structure has been demolished.
7. Contractor shall immediately restore the public right-of-way to its original condition upon completion of the work, including restoration of openings, broom sweeping walks and streets and raking of grassy areas.
8. In the event that construction of a new structure on the site is not commenced within 60 days of issuance of the Demolition Permit, the site shall be leveled and turned to grass (through sod or seed) by the end of that 60 day period. The temporary construction fence shall be removed within 45 days thereafter.

Note: Restoration deposit is required. $500 base fee + $50 per lineal foot of adjacent public right of way.

DEMOLITION GUIDELINES

Submittal Requirements Prior to processing any Application for Demolition Permit, the following items of information must be received by the Permit Processing Division. See reverse side of this form for additional information related to submittal requirements and processing of this application.

The following permit applications/items shall be submitted concurrently with this Application for Demolition Permit.

Required Submittal Checklist, in general, if applicable;

	Completed APPLICATION w/contractors		SCOPE of WORK (3)(proposed height and materials)
	PLAT OF SURVEY(3)		Proof of Ownership
	SITE PLAN		STRUCTURAL (3)(Footings, and any structural details)
	County Demolition Permit		Traffic Plan
	Certificate of Appropriateness Required for Historic District only		Structural Engineer's Report Required where structure to be demolished Copy of letter submitted to adjoining property abuts another structure owners advising of pending demolition work
	Electric Cut-off Letter		Gas Cut-off Letter
	Photographs		Notice of Demolition
	R.O.W. Obstruction		R.O.W. Opening
	Hydrant Deposit Required when hydrant is used as water source		Hydrant Deposit Required when hydrant is used as water source

ONLINE SERVICES to better serve you...	• **Online Permit submittal is available** • **Online Permit Status is available** • **Online Inspection scheduling is available at www.oak-park.us**
The permit process is a check and balance system that normally involves a designer, plans examiner, contractor, and inspector to ensure the best quality and safest construction possible. As much as the mentioned professionals attempt to achieve full code compliance every effort has been made to identify all code deficiencies however; failure to identify a code deficiency during plan review and inspection does not alleviate any obligation to comply with all applicable code provisions.	
Approved plans shall be available on site at all times	**All previous inspection reports shall be available on site**
Any changes to the approved construction documents shall be resubmitted in triplicate for a re-review & re-approval	
Police/Fire@911 NICOR @888-642-6748 ComEd@800-344-7661 J.U.L.I.E 811 OSHA 847-803-4800	
In general, nothing should be concealed unless a passing inspection has been issued **TO SCHEDULE AN INSPECTION CALL: 708-358-5430 or at www.oak-park.us**	

ADDENDUM NO. 1

September 6, 2018

PROJECT NO. RFP 18-11: 700 Madison St. Building Demolition

VILLAGE OF OAK PARK

PUBLIC WORKS CENTER

201 SOUTH BLVD

COOK COUNTY, ILLINOIS

PROPOSAL DUE DATE: September 13, 2018

This addendum forms a part of the Contract Documents and amends the original documents and the Plans and Special Provisions. Where any part of the contract documents is amended, the unaltered provisions are to remain in effect.
This is the only notice you receive, with no follow up by mail. Please CONFIRM receipt of this addendum by phone, fax or email.

1. ***Attached is Reference 3 Asbestos-Containing Material Summary Report ACM Appendices (Has been uploaded to drop box https://www.dropbox.com/sh/ltvs75asfls4dc3/AAAwR8W13_gqduhfJooc29-ta?dl=0)***

Arry Lazaridis
Engineer Technician
Village of Oak Park
201 South Blvd
Oak Park, IL 60302
708.358.5726
alazaridis@oak-park.us

ADDENDUM NO. 2

September 12, 2018

PROJECT NO. RFP 18-11: 700 Madison St. Building Demolition

VILLAGE OF OAK PARK

PUBLIC WORKS CENTER

201 SOUTH BLVD

COOK COUNTY, ILLINOIS

PROPOSAL DUE DATE: September 14, 2018 @ 12:00pm

This addendum forms a part of the Contract Documents and amends the original documents and the Plans and Special Provisions. Where any part of the contract documents is amended, the unaltered provisions are to remain in effect.
This is the only notice you receive, with no follow up by mail. Please CONFIRM receipt of this addendum by phone, fax or email.

1. ***Due date for RFP 18-11 Madison St Building Demolition will be moved to Friday September 14, 2018 at 12:00pm. Please drop off Bids at the Village of Oak Park Public Works office located at 201 South Blvd Oak Park, IL 60302.***
2. ***Contractors will not be required to have Builders Risk Insurance. This can be found in Section I O. Insurance Requirements***

A Builder's Risk "all-risk" policy form shall also be provided including insurance for physical loss or damage to the Work, temporary buildings, false-work, and materials and equipment in transit, and shall insure against at least the following perils or causes of loss: fire, lightning, extended coverage, theft, vandalism and malicious mischief, earthquake, collapse, debris removal, demolition occasioned by enforcement of Laws and Regulations, water damage (other than that caused by flood), and such other perils or causes of loss.
Limit: $1,000,000.00 .

Arry Lazaridis
Engineer Technician
Village of Oak Park
201 South Blvd
Oak Park, IL 60302
708.358.5726
alazaridis@oak-park.us